Meeting Date: June 14, 2016 Agenda Item 23

REQUESTED COMMISSION ACTION:

___ Consent ___ Ordinance X Resolution ___ Consideration ___ Workshop

SHORT TITLE OR MOTION: A RESOLUTION OF THE CITY COMMISSION OF THE CITY OF POMPANO BEACH, FLORIDA, APPROVING AND AUTHORIZING THE PROPER CITY OFFICIALS TO EXECUTE AN APPLICANT-INSTALLED FACILITIES AGREEMENT FOR UNDERGROUND CONVERSIONS BETWEEN THE CITY OF POMPANO BEACH AND FLORIDA POWER & LIGHT COMPANY; PROVIDING AN EFFECTIVE DATE **(No Cost).**

Summary of Purpose and Why:

As a part of the Briny Avenue Undergrounding and Streetscape Improvements project, Florida Power & Light (FPL) requires the City to enter into an "Applicant-Installed Facilities" Agreement with them if the City or its Contractor (in this case Burkhardt Construction) intends on performing the installation of FPL supplied equipment (transformers, hand holes conduit, cable, etc.) in order to have the existing overhead utilities converted to underground. Attached is this Agreement which requires execution.

Accomplishing this item supports achieving Initiative 2.3, Objective 2.3.4 "Undergrounding Utility Lines on Briny" identified in the City's Great Places Strategy.

QUESTIONS TO BE ANSWERED BY ORIGINATING DEPARTMENT:

(1) Origin of request for this action: Engineering
(2) Primary staff contact: John Sfiropoulos, PE / Horacio Danovich Ext 7044 / 7834
(3) Expiration of contract, if applicable: N/A
(4) Fiscal impact and source of funding: N/A

DEPARTMENTAL COORDINATION	DATE	DEPARTMENTAL RECOMMENDATION	DEPARTMENTAL HEAD SIGNATURE
Engineering	6/1/16	APPROVE	
City Attorney	6/2/16	APPROVE	
Finance	6/2/16	APPROVE	
Budget	6/2/16	APPROVE	

___ Advisory Board
___ Development Services Director
X City Manager

ACTION TAKEN BY COMMISSION:

Ordinance	Resolution	Consideration	Workshop
1st Reading	1st Reading	Results:	Results:
2nd Reading			

City Attorney's Communication #2016-863

June 1, 2016

TO: John Sfiropoulos, P.E., City Engineer

FROM: Mark E. Berman, City Attorney

RE: Resolution – Applicant-Installed Facilities Agreement for Underground Conversions

Pursuant to your memorandum dated May 24, 2016, Engineering Department Memorandum No. 16-89 I have prepared and attached the following form of Resolution:

> **A RESOLUTION OF THE CITY COMMISSION OF THE CITY OF POMPANO BEACH, FLORIDA, APPROVING AND AUTHORIZING THE PROPER CITY OFFICIALS TO EXECUTE AN APPLICANT-INSTALLED FACILITIES AGREEMENT FOR UNDERGROUND CONVERSIONS BETWEEN THE CITY OF POMPANO BEACH AND FLORIDA POWER & LIGHT COMPANY; PROVIDING AN EFFECTIVE DATE.**

Please feel free to contact me if I may be of further assistance.

MARK E. BERMAN

/jrm
l:cor/engr/2016-863

Attachment

RESOLUTION NO. 2016-_____

CITY OF POMPANO BEACH
Broward County, Florida

A RESOLUTION OF THE CITY COMMISSION OF THE CITY OF POMPANO BEACH, FLORIDA, APPROVING AND AUTHORIZING THE PROPER CITY OFFICIALS TO EXECUTE AN APPLICANT-INSTALLED FACILITIES AGREEMENT FOR UNDERGROUND CONVERSIONS BETWEEN THE CITY OF POMPANO BEACH AND FLORIDA POWER & LIGHT COMPANY; PROVIDING AN EFFECTIVE DATE.

BE IT RESOLVED BY THE CITY COMMISSION OF THE CITY OF POMPANO BEACH, FLORIDA:

SECTION 1. That an Agreement between the City of Pompano Beach and Florida Power & Light Company, a copy of which Agreement is attached hereto and incorporated by reference as if set forth in full, is hereby approved.

SECTION 2. That the proper City officials are hereby authorized to execute said Agreement between the City of Pompano Beach and Florida Power & Light Company.

SECTION 3. This Resolution shall become effective upon passage.

PASSED AND ADOPTED this _____ day of _____, 2016.

_____
LAMAR FISHER, MAYOR

ATTEST:

_____
ASCELETA HAMMOND, CITY CLERK

/jrm
6/1/16
l:reso/2016-222

APPLICANT-INSTALLED FACILITIES AGREEMENT FOR UNDERGROUND CONVERSIONS (WR # 4860334)

This Agreement, made and entered into this _____ day of _____, 20_____, by and between CITY OF POMPANO BEACH (the "Applicant"), a Florida municipal corporation or county with an address of 100 W. Atlantic Blvd., Rm. 276, Pompano Beach, FL and FLORIDA POWER & LIGHT COMPANY ("FPL"), a Florida corporation organized under the laws of the State of Florida, with an address of P.O. Box 14000, 700 Universe Boulevard, Juno Beach, FL 33408-0429.

WITNESSETH:

WHEREAS, the Applicant has executed the appropriate underground facilities conversion agreement ("Conversion Agreement") with FPL to convert certain overhead electric distribution facilities (collectively the "Existing Overhead Facilities") to underground distribution facilities (collectively the "Underground Facilities"), as described in the aforementioned Conversion Agreement (hereinafter the "Conversion");

WHEREAS, the Applicant desires to perform itself, or through its Contractors, certain Work as such term is described in Exhibit A associated with the Conversion;

WHEREAS, FPL is willing, subject to all the terms and conditions set forth below in this Agreement, to allow the Applicant to perform the Work based on Applicant's assurance that such Work will be in accordance with FPL's designs, instructions, standards and specifications, and such Work will not adversely impact FPL or its electric customers;

NOW, THEREFORE, in recognition of the foregoing premises, and in consideration of the covenants and promises set forth herein below, FPL and Applicant do hereby agree as follows:

1. **Compliance with Tariff**. Applicant shall comply with and abide by the requirements, terms, and conditions of this Agreement, the Conversion Agreement, and FPL's electric tariff (the "Tariff").

2. **Conditions for Work to be Performed.** Applicant shall, at its own cost and expense, perform or cause to be performed, all Work, as described in Exhibit A, in accordance with the terms and conditions of this Agreement and the standards and specifications shown in Exhibit B. The Applicant shall provide all survey and staking to ensure that all Underground Facilities are installed as shown in the Conversion Agreement and provide As-Built prints to FPL within two (2) weeks of installation, signed and certified by a Florida registered surveyor along with a FPL "Redline" document.

3. **Commencement of Work**. Applicant shall perform the Work, or any portion of the Work, only upon receipt of a notice to proceed containing the approved drawings, specifications and instructions from FPL ("Notice to Proceed"). After receipt of the Notice to Proceed, Applicant shall provide written notice of intent to commence work to FPL at least five (5) days prior to commencement of such Work. Applicant shall not perform any excavation work without first notifying Sunshine State One Call for identification and marking of existing underground utilities and complying with the excavation requirements set forth in Florida Statute Chapter 556.

4. **Materials**. All Materials are to be supplied by FPL and shall be picked up by Applicant at the following address _____ at a mutually agreed upon time, typically with 5 business days minimum notice, but no more than 15 business days notice, unless mutually agreed upon. Alternatively, FPL will, at Applicant's expense, have the material delivered to a mutually agreed upon location. Applicant assumes liability for any materials lost, stolen or damaged once these materials are picked up by, or delivered to, the Applicant.

5. **Contractors**. Applicant may enter into a contract with a contractor for the performance of the Work, or any portion thereof, provided that the contractor has been approved by FPL in writing prior to execution of such contract. Applicant shall not make any substitution of any contractor for the performance of Work unless the substitution is approved by FPL in writing. The Applicant's contractor(s) shall perform ALL work as outlined within Exhibit A & Exhibit B. No contract or purchase order between Applicant and its contractor(s) shall bind or purport to bind FPL, but each contractor entering into a contract with Applicant with respect to the Work shall name FPL as an intended third-party beneficiary and include a provision permitting its assignment to FPL upon FPL's written request, following default by Applicant or termination or expiration of this Agreement. Applicant shall provide FPL with written certification from each of its contractors performing Work that all warranties, guarantees and obligations of such contractors are equivalent or better than those granted by such contractor to FPL for similar work and shall require that each such contractor name FPL as an intended third party beneficiary of such warranties, guarantees and obligations with the same rights of enforcement as Applicant. Applicant shall assign all representations, warranties, guaranties, and obligations of all contractors at the request and direction of FPL, and without recourse to Applicant, to FPL upon default by Applicant or termination or expiration of this Agreement; provided, however, that, notwithstanding such assignment, Applicant shall be entitled to enforce each such representation, warranty, guaranty, and obligation so long as Applicant has any liability under this Agreement. Applicant hereby assigns to FPL, effective as of the termination or expiration of this Agreement, all representations, warranties, guaranties and obligations of all Contractors.

6. **Right of Entry**. FPL reserves the right, together with its agents or designees to enter the Jobsite as it may elect for the purpose of inspecting the Work, or constructing or installing such collateral work as it may desire, or testing, boring or surveying, or any other purpose.

7. **Inspection and Correction of Deficiencies**.

7.1. All Work shall be properly inspected and tested, if appropriate, by Applicant and shall at all times be subject to additional inspection by FPL and its designee(s).

7.2. Neither the failure to make such inspection, nor the failure to discover defective workmanship, materials, or equipment, nor approval of or payment to Applicant for such Work shall prejudice the rights of FPL thereafter to correct or reject the same.

7.3. Applicant shall correct any deficiencies found with the Work, including but not limited to discrepancies that are inconsistent with FPL's design, instructions, standards or specifications within two (2) business days. If Applicant does not adequately rectify the identified deficiencies in the required timeframe, FPL may, at its sole discretion, perform, or have performed by its contractor the required repairs and Applicant shall pay FPL for any costs incurred. These requirements apply whether the discovery of deficiencies occurs while Applicant is performing its Work or while FPL, or its contractor, is performing its portion of the work.

7.4. If any Work or part thereof is covered over contrary to the requirements of this Agreement or the written request of FPL, it must, if required by FPL, be uncovered for observation and inspection and covered again at Applicant's sole expense.

7.5. If any Work that FPL has not specifically requested to observe and inspect prior to being covered has been covered, FPL may request to see such Work or part thereof and it shall be uncovered by Applicant. If such Work or part thereof is found to be in accordance with this Agreement, the cost of uncovering and covering again shall be paid by FPL. If such Work or part thereof fails to meet the requirements of this Agreement, Applicant shall pay all costs of uncovering, correcting, and covering again.

7.6. Applicant shall pay FPL for all time spent reviewing and inspecting Applicant's Work.

7.7. No electric customers shall be connected to the Underground Facilities prior to all deficiencies being rectified.

8. **Indemnity / Liability of Applicant**.

8.1. Applicant shall protect, defend, indemnify and hold FPL free and unharmed from and against any liabilities whatsoever resulting from or in connection with this Agreement, the Conversion or in connection with the performance of the Work by the Applicant, its employees, Contractors or Contractor employees, whether or not such liabilities are due to or caused in whole or in part by negligence of FPL; including but not limited to payment disputes between contractor and Applicant.

8.2. Applicant shall assume full responsibility for all damages and all restoration arising in connection with the Work.

9. **Design Work**. FPL shall provide all design, instruction, standards and specifications necessary to perform the Conversion.

10. **Completion of Work and Ownership**. Applicant shall complete the Work by [redacted] 20[redacted] and notify FPL when said Work is complete. Upon FPL's final written approval of the completion of the Work ("Acceptance"), Applicant acknowledges that all rights, title and interest, free and clear of all liens, in and to the Work shall vest in FPL. If requested by FPL, Applicant shall provide FPL, in a form acceptable to FPL, an affidavit of Applicant certifying payment of all indebtedness to all Contractors and a written release of liens from Applicant and each Contractor.

11. **No Liability by FPL**. FPL assumes no liability due to any damage, misunderstanding of installation drawings or specifications, or any actions due to Applicant or its Contractor.

12. **Suspension for Cause:**

12.1. FPL may, by Notice, temporarily suspend the Work, or any portion thereof, under this Agreement when the performance by Applicant or Contractor is unsatisfactory to obtain the results required by this Agreement.

12.2. The methods by which Applicant performs its Work are entirely the responsibility of Applicant. FPL's right to suspend Work is intended solely to verify that the Work being performed by Applicant and its Contractor conforms to the design, instruction, standards and specifications and shall not obligate FPL to review the efficiency, adequacy or safety of Applicant's or its Contractors methods or means of operation or construction.

12.3. Any additional costs incurred by Applicant resulting from such suspension shall be borne solely by Applicant.

12.4. If Applicant immediately corrects the unsatisfactory condition FPL shall authorize resumption of the Work. Applicant's failure to immediately effect correction of the unsatisfactory conditions shall be cause for termination of this Agreement.

13. **Termination for Cause:**

13.1. FPL may, upon Notice to Applicant, and without prejudice to any remedy available to FPL under law, in equity or under this Agreement, terminate the whole or any part of this Agreement for cause and take possession of the Work without termination charge, penalty or obligation in the event Applicant fails to perform a material obligation under this Agreement and fails to cure such material obligation default within a reasonable period of time, but in no event more than ten (10)

business days, after Notice from FPL specifying the nature of such default (any such termination referred to as a "Termination for Cause").

13.2. In the event of Termination for Cause by FPL, Applicant shall:

a. Unless instructed otherwise in the Notice, immediately stop all Work hereunder;

b. Issue no further contracts except with the prior written consent of FPL;

c. Assign to FPL, to the extent requested by FPL, all rights of Applicant under contracts outstanding;

d. Terminate, to the extent requested by FPL, outstanding contracts;

e. Fully cooperate and refrain from hindering or interfering in any manner with any other persons or parties currently or prospectively performing the Work; and

f. Take any other action toward termination, or toward preservation of the Work, that FPL may direct.

13.3. Upon a Termination for Cause, all obligations of FPL hereunder shall terminate effective immediately. Upon such Termination for Cause, FPL may either rework or take over the terminated Work and proceed to provide such materials, supplies, equipment and labor of both FPL and FPL contractors, as may be reasonably necessary to complete said Work. FPL may have any partially fabricated portion of the Work removed from Applicant's or contractor's facilities upon Notice to Applicant. Applicant shall be liable for any increase of FPL's costs, including rework costs, incurred by FPL as a result of FPL's termination of the contract for cause.

13.4. In the event of Termination for Cause, FPL shall have no liability to Applicant for costs incurred by Applicant as a result of such termination.

14. **Termination Prior to Construction**. Applicant may terminate this Agreement at any time prior to the start of construction. If Applicant elects to still complete the Conversion, then the Contribution-In-Aid-of-Construction (CIAC) amount provided in the Conversion Agreement shall be revised accordingly. The revised Conversion Agreement must be executed and any additional CIAC due received by FPL prior to the start of construction.

15. **Assignment**. This Agreement is not assignable.

16. **Applicant's Payments to FPL.** Any monies that are owed by Applicant to FPL under this Agreement shall be paid to FPL within thirty (30) days of FPL producing an invoice.

17. **Notice**. As used herein, the term "Notice" shall mean any formal written correspondence providing notice of action, purpose, intent or the like given under the provisions of this Agreement. Unless otherwise provided in this Agreement, Notice shall be delivered in person, by courier or by certified mail and shall be effective when received. General correspondence is not categorized as Notice.

IN WITNESS WHEREOF, FPL and Applicant have executed this Agreement for the provision of Applicant-Installed facilities to be effective as of the date first above written.

For: **CITY OF POMPANO BEACH**

By:_____
(signature)

Name:_____
(print or type)

Title:_____
(print or type)

By:_____
(signature)

Name:_____
(print or type)

Title:_____
(print or type)

Approved as to Terms and Conditions:_____
(signature/title)

Approved as to Form and Legal Sufficiency:_____
(signature/title)

For: **FLORIDA POWER & LIGHT COMPANY**

By:_____
(signature)

Name:_____
(print or type)

Title:_____
(print or type)

Exhibit A

WR # 4860334

Work to be Performed:

Applicant shall:

- Install all conduit and concrete products based on the attached specifications and in the locations as indicated on the attached drawings.

- Install cable, transformers and switch pads including the primary and secondary cable terminations and connections. FPL will be responsible for energizing the new underground circuit(s) to the existing FPL electrical system.

Exhibit B

WR # 4860334

Standards and Specifications

SPECIFICATIONS FOR UNDERGROUND CONDUIT INSTALLATION

1. Conduit, handhole, and transformer pad placement shall be in the easement provided and in accordance with the design drawings and field staking.

2. Use only FPL supplied conduit with FPL supplied bends. (Figure 1)

3. Glue all joints securely with FPL supplied glue. (Appendix A)

4. FPL conduit markers must be placed at all conduit ends. (Figure 1)

5. Primary conduit is to have a minimum of 36 inches of cover. Secondary conduit is to have a minimum of 24 inches of cover. (Figure 1). Secondary conduit may be placed at 36" depth when in the same trench as primary conduit.

6. All service and street light conduit is to have 24 – 30 inches of cover at property line. All future service stub-outs at transformer locations to be installed with 90's. Where primary, secondary, or street light conduit runs turn horizontally, 36 inch radius 90 degree bends are to be used.

7. Cap all ends of the conduit with FPL supplied end caps. Denote termination point of each conduit run on the capped end, (Appendix B). All conduit ends are to be terminated 1 – 2 feet above final grade except at transformer locations where conduit ends are to be terminated 3 inches above final grade. (Figure 3)

8. Install 1 #12 copper locate wire supplied by FPL in each trench per attached specs (Figure 4). All ends of the #12 copper locate wire must be exposed above grade, and secured with a tie wrap to a piece of stubbed up conduit for future locates. (Figure 4)

9. Conduits terminated at transformer locations to be installed with templates supplied by FPL per Figure 3A, 3B, or 3C according to the type of transformer being installed. (Consult your Service Planner).

10. Concrete transformer slabs provided by FPL are to be installed level on compacted fill at final grade and oriented as shown on the FPL design drawing(s) (Figure 3)

11. Conduits terminated at future secondary handhole locations to be installed per Figure 2. If secondary handholes are being installed at the time of conduit installation, install 45 degree bends as shown in Figure 1.

12. Primary splice handhole to be installed with electronic cable marker. (Figure 2A)

13. Install a continuous length of pull string in all conduit runs.

14. Backfill operations are to be done carefully with special attention given to utilizing clean fill, thereby assuring the elimination of rock and other scrap material to insure that the conduit will not be damaged or marking devices moved and proper compaction is achieved.

TESTING AND ACCEPTANCE GUIDELINES

Following notification of completed installation of underground conduits by a developer/contractor FPL will:

1. Randomly spot check the installation depth of conduits below grade at a minimum of 2 points between each primary termination point, (transformers, splice boxes & risers) noting the measured depth on the record drawing.

2. After confirming the correct routing and integrity of a conduit run, verify that the cable markers were installed and exposed conduit ends are plugged.

3. Confirm that a continuous lerigth of pull string has been installed in all conduit runs and verify that all conduits runs terminate in the correct locations.

4. The final acceptance of the conduit installation will occur when FPL pulls the conductor and occupies the conduit.

TEMPLATE

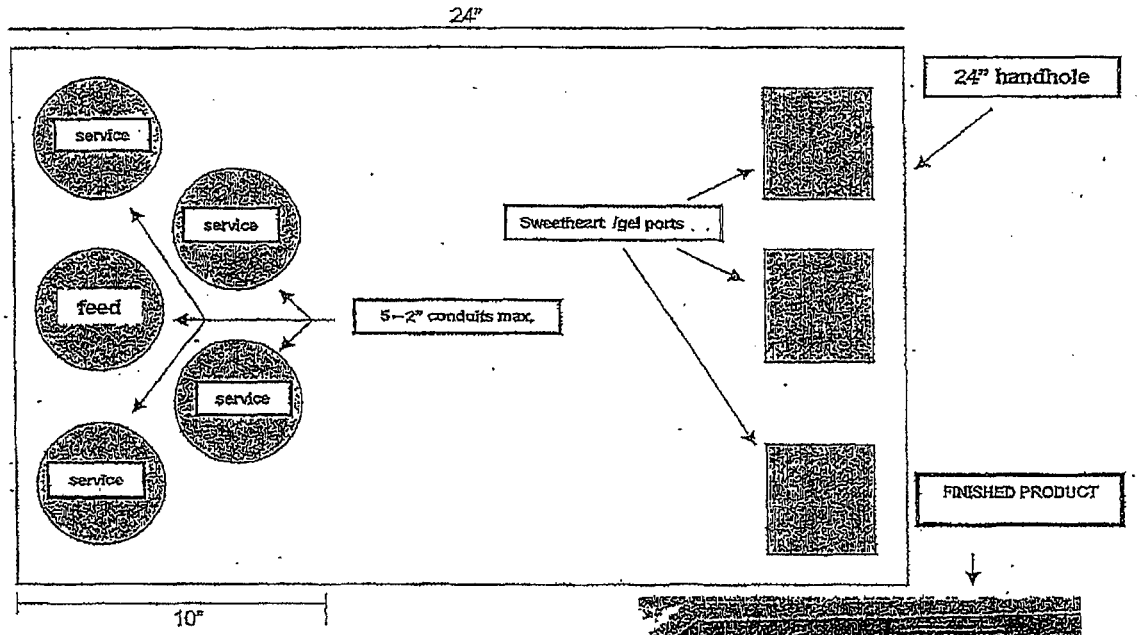

WHEN INSTALLING 2" CONDUITS UP TO 6 MAY BE PLACED IN A 24" HANDHOLE. Please install all conduits within 10" of one end of the handhole. This allows cables to drape across to the other end of handhole where the terminations will be placed such as sweetheart connectors or gel port connectors. When the wires are raised out of the handhole this will allow approximately 18" of wire above ground level making it easier for employees to work on in future situations.

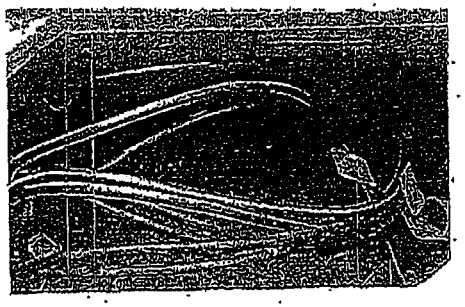

FIGURE 1

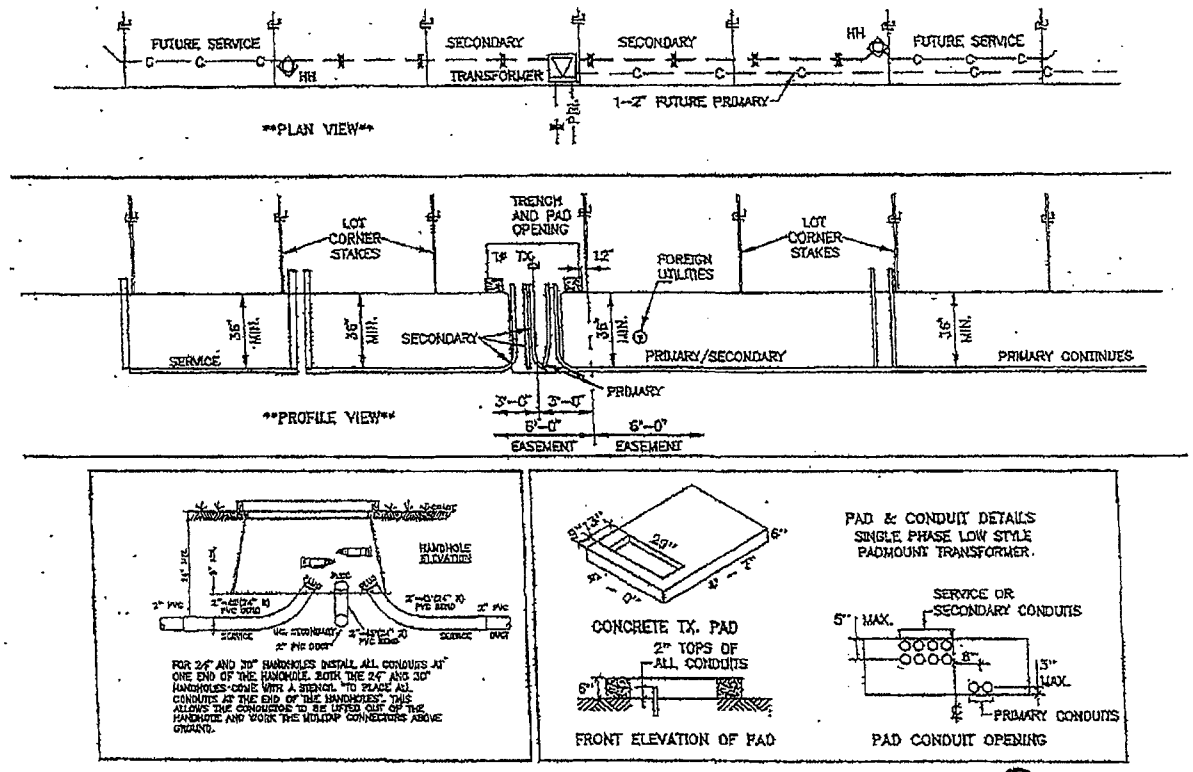

F P L

Note - Transformer location to be per specific design drawing, and may split lot lines in some cases.

FIGURE 2

TYPICAL SERVICE HANDHOLE INSTALLATION

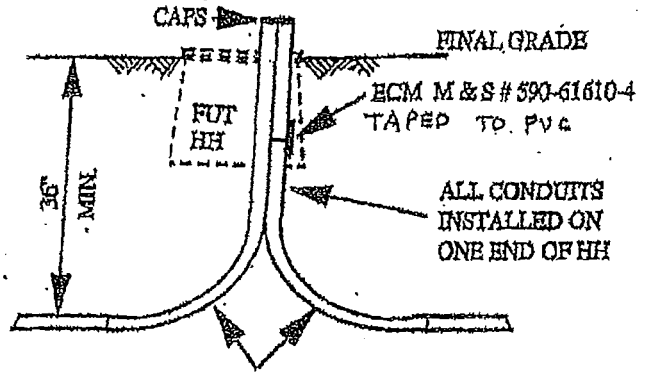

2" - 90 DEG (24" R - J TYPE) BEND M & S # 164-23800-6

FIGURE 2A

48" PRIMARY SPLICE HANDHOLE

M & S # 161-12100-4

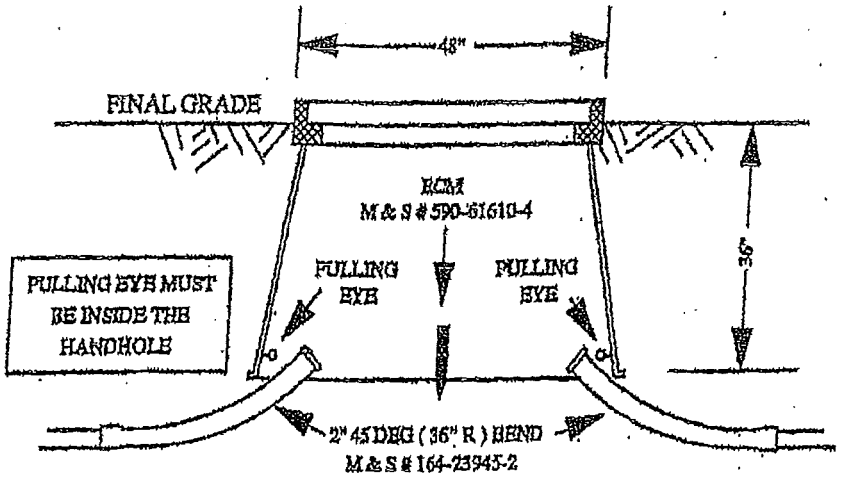

FIGURE 3

PAD & CONDUIT DETAILS

SINGLE PHASE LOW STYLE
PADMOUNT TRANSFORMER

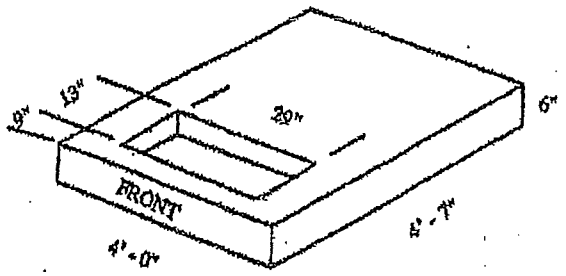

CONCRETE TRANSFORMER PAD
M & S # 162-24800-4

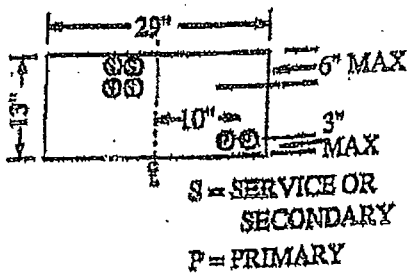

PAD CONDUIT OPENING

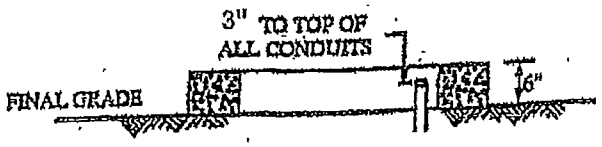

FRONT ELEVATION OF PAD

FIGURE 3A

ONE LOW STYLE & ONE REGULAR STYLE TRANSFORMER

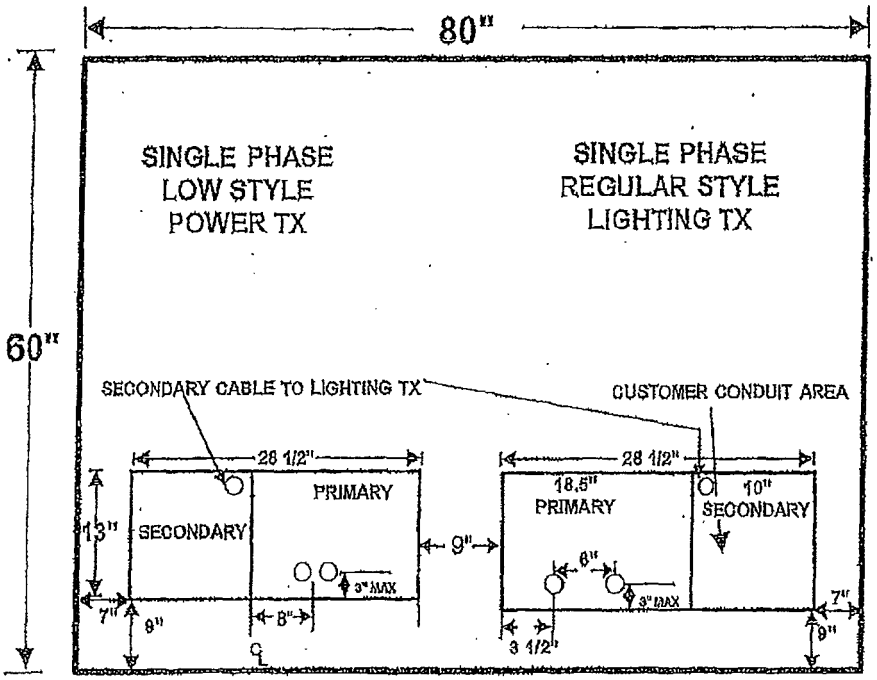

(FRONT OF PAD)

FIGURE 3B

SINGLE PHASE LOW STYLE TRANSFORMER

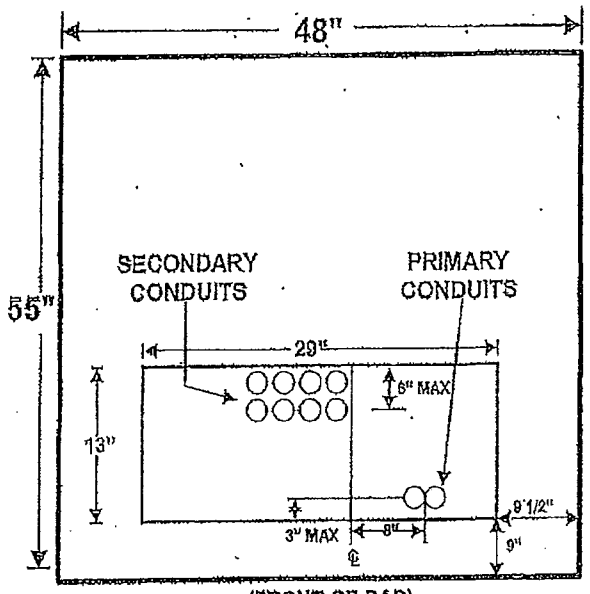

(FRONT OF PAD)

FIGURE 3C

TWO LOW STYLE TRANSFORMERS

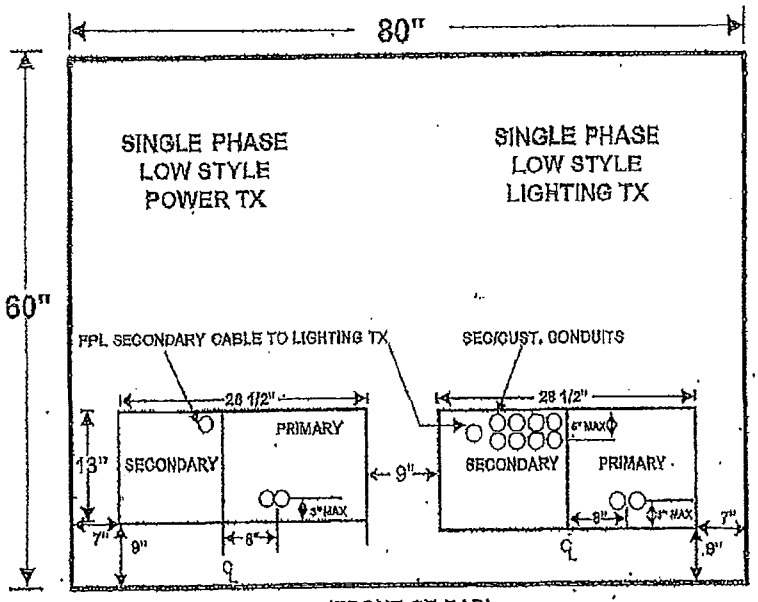

(FRONT OF PAD)

UX-114.0.2	CONDUIT LOCATIONS FOR 3 PHASE DEAD FRONT PAD MOUNTED TRANSFORMERS WITH SECTIONALIZING (CABLE THRU) UP TO 500KVA USING 6-2" DUCTS FOR PRIMARY CABLE	UX-114.0.2

ALTERNATIVE 1

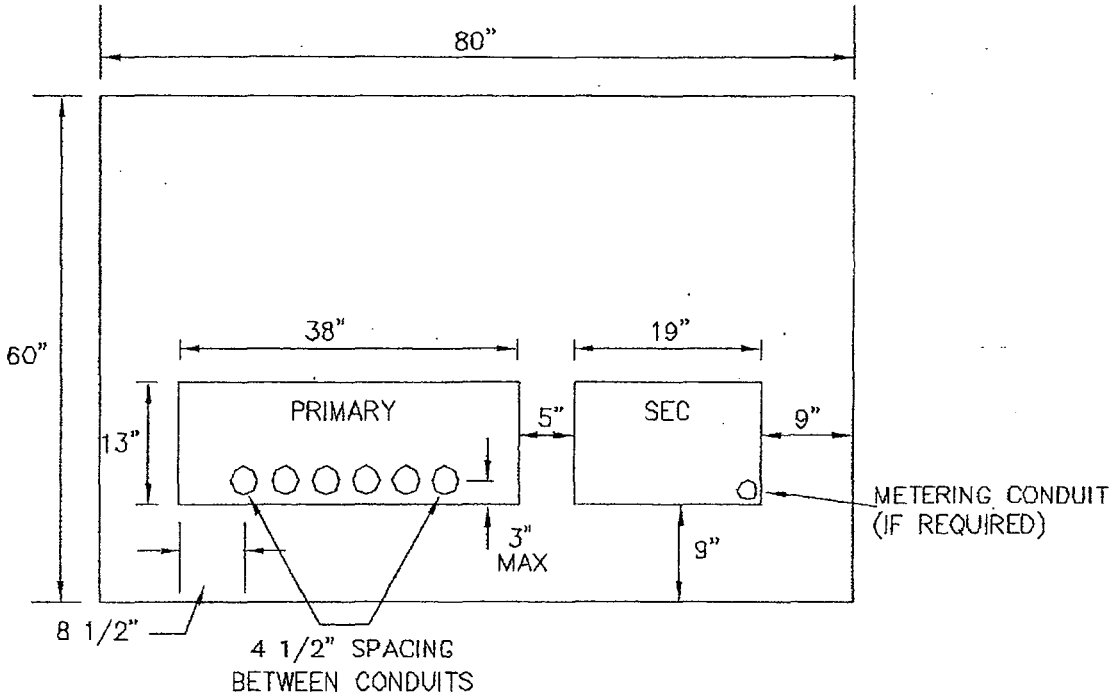

(FRONT OF PAD)

NOTES:

1)REFERENCE I-70.0.1 OF THE DCS
2)PAD M&S 162-24680-0
3)ALL CONDUITS TO EXTEND 3"MAX ABOVE GROUND LEVEL
4)ALL SECONDARY /CUSTOMER CONDUITS MUST FIT WITHIN THE 19"X13" AREA INDICATED. WILL HOLD 8-4" CONDUITS MAX.
5)ALL CONDUIT RELATED DIMENSIONS ARE TO THE CENTER OF THE DUCT
6)MAINTAIN 8' CLEARANCE FROM FRONT AND 3' CLEARANCE FROM SIDES AND BACK OF TRANSFORMER PAD.

F P L

OH & UG DISTRIBUTION SYSTEM STANDARDS

ORIGINATOR: SMS DRAWN BY: BILL

DATE: APPROVED: J.J. MCEVOY NO SCALE

SUPERVISOR, OH/UG PRODUCT SUPPORT SERVICES

NO.	DATE	REVISION	ORG.	DRAWN	APPR.
1	05/28/02	UPDATE DRAWING (NOTE 4)	RAP	JES	JJM

UX-117.0.2	CONDUIT LOCATIONS FOR SINGLE PHASE REGULAR STYLE PAD MOUNTED TRANSFORMERS	UX-117.0.2

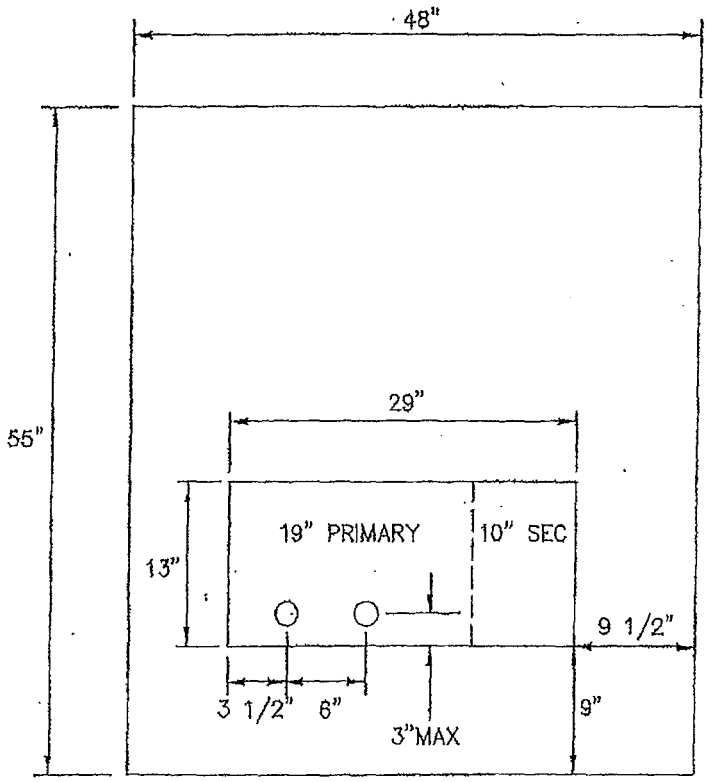

(FRONT OF PAD)

NOTES:
1)REFERENCE I-62.0.0 OF THE DCS
2)PAD M&S 162-24800-4
3)ALL CONDUITS TO EXTEND 3"MAX ABOVE GROUND LEVEL
4)ALL SECONDARY/CUSTOMER CONDUITS MUST FIT WITHIN THE 10"X13" AREA INDICATED.
5)ALL CONDUIT RELATED DIMENSIONS ARE TO THE CENTER OF THE DUCT
6)MAINTAIN 8' CLEARANCE FROM FRONT AND 3' CLEARANCE FROM SIDES AND BACK OF TRANSFORMER PAD.

F P L
OH & UG DISTRIBUTION SYSTEM STANDARDS

ORIGINATOR: SMS DRAWN BY: BILL

DATE: APPROVED: J.J. MOEVOY NO SCALE
SUPERVISOR, OH/UG PRODUCT SUPPORT SERVICES

NO.	DATE	REVISION	ORIG.	DRAWN	APPR.

FIGURE 4

1 - #12C INSTALLATION

When installing conduit only (cable to be pulled later), a single #12 copper insulated wire is to be direct buried in every trench at the same depth as the conduits. The ends of the wire are to be terminated above ground at the conduit ends as shown. This wire will allow empty plastic conduits to be located with electronic equipment.

This method is not intended for cases where conduit is installed strictly for road crossings only. In these cases ECM markers should be used to mark the conduit ends.

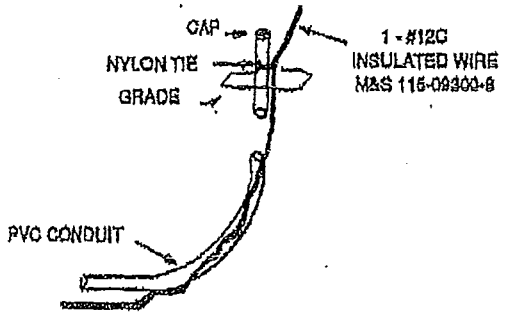

WHERE TO INSTALL #12C WIRE

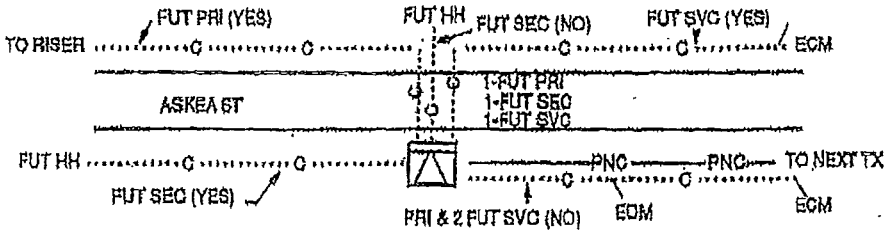

DRAWING SYMBOLS

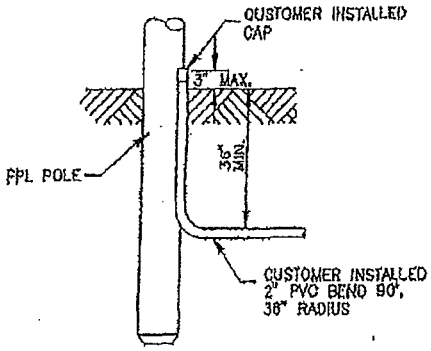

TYPICAL PVC CONDUIT BEND AT RISER POLE INSTALLATION

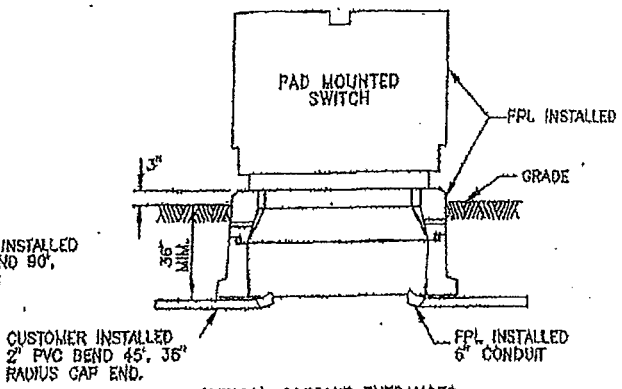

TYPICAL CONDUIT ENTRANCES TO PAD MOUNTED SWITCH

SYMBOLS

	EXISTING	PROPOSED
CONDUCTORS – PRIMARY FPL OWNED, IN CONDUIT, WITH CONDUCTOR SIZE, METAL, RATED VOLTAGE INSULATION AND NEUTRAL INDICATED.	PNC	PNC
CONDUCTORS – SECONDARY – STREET LIGHT FPL OWNED, IN CONDUIT, WITH CONDUCTOR SIZE, METAL AND INSULATION INDICATED (HM/HD TPX SHOWN).	1/0A	4/0A
SERVICE LATERALS THREE-WIRE SECONDARY SERVICE. FPL OWNED IN CONDUIT WITH CONDUCTOR SIZE, METAL, INSULATION AND JACKET INDICATED.	3-2C RN	1/0A TPX
EMPTY CONDUIT	C	C C
PADMOUNTED TRANSFORMERS PADMOUNTED TRANSFORMER, 1ϕ, WITH KVA RATING (FRONT, OR TERMINAL CHAMBER, IS SMALL RECTANGLE AT RIGHT END OF SYMBOL.. PRIMARY PHASE INDICATED) TRANSFORMER STYLE SHOWN AS FOLLOWS: (RS) – REGULAR SIZE – 42" + HIGH, (DF) – DEAD FRONT – 32 " + HIGH, (LS) – LOW STYLE – 24" + HIGH.	B 15	B 15
STRUCTURES ELECTRONIC CABLE MARKER AND OR SPLICE PIT (BURIED)		
SERVICE HANDHOLE		

FPL

APPENDIX A

UN-27.0.0	RECOMMENDED PRACTICES FOR FIELD JOINING OF PVC CONDUIT (USING CLEAR SOLVENT CEMENT) AND PVC CONDUIT INSTALLATION	UN-27.0.0

FIELD JOINING

1. EXAMINE EACH LENGTH OF CONDUIT AND ENSURE THERE ARE NO INTERIOR OR EXTERIOR IMPERFECTIONS, CRACKS, ETC. REMOVE ALL FOREIGN MATERIAL FROM INSIDE CONDUIT.

2. USING A HACKSAW, FINE TOOTH WOOD SAW, OR NYLON STRING, CUT PIPE SQUARE (IF REQUIRED). REMOVE ANY BURRS AND BEVEL ANY SHARP EDGES. WIPE DRY WITH A CLEAN, DRY CLOTH.

3. APPLY CEMENT (M & S #522-14100-7) UNIFORMLY ON INSIDE OF BELL OR FITTING. APPLY UNIFORM COAT OF CEMENT ONTO CONDUIT END. DO NOT POUR, SPLASH, OR GLOB CEMENT ON!

4. IMMEDIATELY INSERT THE CONDUIT INTO THE BELL END OF FITTING ALL THE WAY TO THE INSIDE SHOULDER. ENSURE SNUG FIT AND TURN CONDUIT 1/4 TURN TO DISTRIBUTE CEMENT EVENLY.

5. HOLD JOINT FOR APPROXIMATELY ONE MINUTE TO ALLOW CEMENT TO BEGIN SETTING. WIPE OFF EXCESS CEMENT.
(NOTE: MANUFACTURER RECOMMENDATIONS ARE TO ALLOW FOR A MINIMUM OF 10 MINUTES OF DRYING TIME PRIOR TO ANY BACKFILLING. WEATHER CONDITIONS MAY VARY THIS SETTING TIME.)

FIELD INSTALLATION

1. LAY CONDUIT RUN INTO TRENCH. DO NOT KICK, THROW OR SLAM IT IN!

2. SURROUNDING TRENCH BACKFILL MUST BE FREE OF LARGE OR SHARP ROCKS, CINDERS OR OTHER DEBRIS WHICH WILL DAMAGE CONDUITS DURING BACKFILL OPERATION OR SUBSEQUENT COMPACTION.

3. IN CORAL ROCK AREAS, IT IS RECOMMENDED THAT HAND BACKFILLING FOR THE FIRST 3 TO 6 INCHES BE PERFORMED.

4. INSTALL PLUGS OR END BELLS ON ALL VACANT DUCTS, AS REQUIRED.

5. THE FINISHED CONDUIT RUN SHALL BE RODDED IN AN APPROVED MANNER (I.E. WINCH LINE, MANDREL, ETC.) TO VERIFY CONTINUITY AND CLEANLINESS. (NOTE: NO CONDUIT RUN SHALL BE ACCEPTED AS PROPERLY INSTALLED UNLESS FREE PASSAGE IS OBTAINED AND VERIFIED BY FPL SUPERVISION.)

FPL
OH & UG DISTRIBUTION SYSTEM STANDARDS

NO.	DATE	REVISION	ORIG.	DRAWN	APPR.

ORDINATOR: OH DRAWN BY: BQ

DATE: 8-30-94 APPROVED: R. J. SALESKY NO SCALE
SUPERVISOR, OH/UG PRODUCT SUPPORT SERVICES

APPENDIX B

UV-12.0.0	IDENTIFICATION OF UNDERGROUND CABLES AND VACANT CONDUITS	UV-12.0.0

GENERAL. ALL UNDERGROUND CIRCUITS SHOULD BE IDENTIFIED WHERE APPLICABLE AS FOLLOWS:

- FEEDER NUMBER
- SWITCH NUMBER
- PHASE
- CONDUCTOR SIZE, METAL, TYPE INSULATION AND VOLTAGE RATE (IF NOT SAME AS OPERATING VOLTAGE)
- SOURCE OR DIRECTION OF FEED
- OWNERSHIP
- ADDRESS OF BUILDING SERVED
- TLM NUMBER
- DATE OF FAILURE ON SECTION OF CABLE (DIRECT BURIED ONLY)
- ANY UNUSUAL CONDITIONS, I.E. CABLE IN CONDUIT, PARTIALLY IN CONDUIT, DIRECT BURIED, ETC.

ALL CIRCUITS AND VACANT CONDUITS SHOULD BE APPROPRIATELY IDENTIFIED AT EACH TERMINAL OR SWITCHING POINT AND ALL INTERMEDIATE LOCATIONS SUCH AS VAULTS, MANHOLES, PAD MOUNTED TRANSFORMERS, OR HANDHOLES. WHEN THE CIRCUIT OR VACANT CONDUIT IS OWNED BY OTHER THAN FLORIDA POWER & LIGHT COMPANY, SHOW "CUST" ON APPROPRIATE TAG. IF NECESSARY INFORMATION CANNOT BE SHOWN ON ONE TAG, USE ADDITIONAL TAGS.

INFORMATION WILL BE PLACED ON APPROVED TAGS SHOWN BELOW IN THE MANNER DESCRIBED FOR THE PARTICULAR CONDITION.

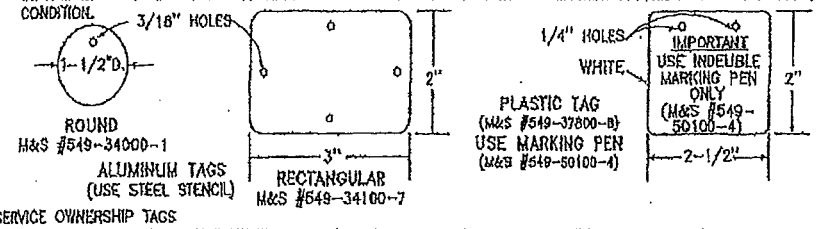

SERVICE OWNERSHIP TAGS

PLACE INSIDE METER CAN. USE TIE WRAP TO ATTACH TAG TO CONDUCTORS. PRINT ADDRESS USING MARKING PEN (M&S #549-50100-4)

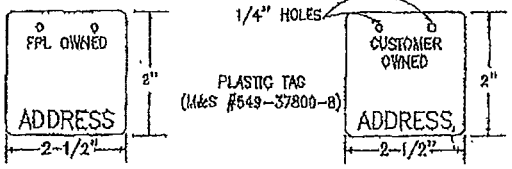

UNDERGROUND DUCT & MANHOLE SYSTEMS

USE ALUMINUM TAGS, AFFIXED TO CABLES WITH #12C-TW ON ALL CIRCUITS IN UNDERGROUND SYSTEMS, SUCH AS SUBWAY VAULTS, MANHOLES, RISER POLES, ETC. ROUND ALUMINUM TAGS ARE FOR FEEDER NUMBER AND PHASE IDENTIFICATION. RECTANGULAR ALUMINUM TAGS ARE USED FOR ALL OTHER IDENTIFICATION PURPOSES FOR EXAMPLE, ON ISOLATED NEUTRAL CONDUCTORS OF PILC CABLES, ETC.

DIRECT BURIED AND CABLE IN CONDUIT SYSTEMS

USE ALUMINUM TAGS FOR CUSTOMER I.D. AS INDICATED ABOVE FOR LOCATIONS THAT WILL BE SUBJECTED TO SUNLIGHT. USE PLASTIC TAGS FOR URD CABLE TERMINATION TAGGING AND AT OTHER LOCATIONS SUCH AS PADMOUNTED TRANSFORMERS AND HANDHOLES. ALLOW 10 SECONDS MINIMUM DRYING TIME TO PREVENT SMEARING. FASTEN PLASTIC TAG TO CABLE WITH TY-RAP (M&S #534-25000-1).

EXAMPLE OF MARKING SECONDARY CABLES

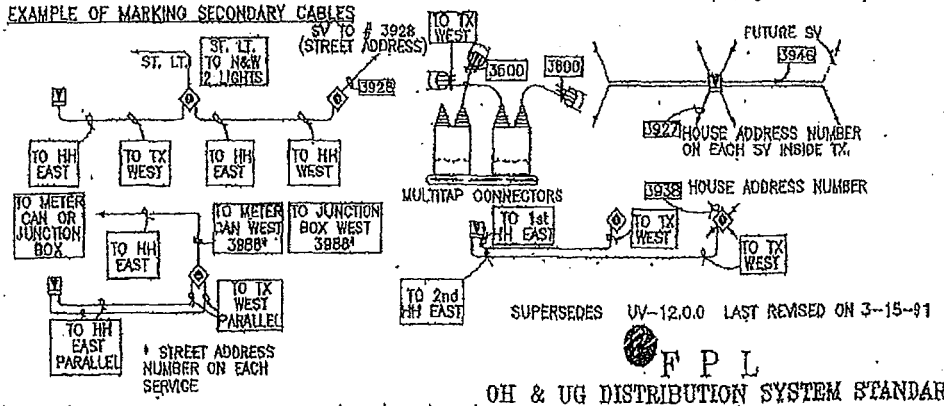

SUPERSEDES UV-12.0.0 LAST REVISED ON 3-15-91

FPL

OH & UG DISTRIBUTION SYSTEM STANDARDS

ORIGINATOR RJO DRAWN BY MLG

NO.	DATE	REVISION	ORIG.	DRAWN	APPR.
0	9-30-94	CHANGED PAGE FORMAT AND REVISED NOTES AND DIMENSIONS	RJO	MLG	RJS

DATE: 9-30-94 APPROVED: R.J. SALESKY SUPERVISOR, OH/UG PRODUCT SUPPORT SERVICES NO SCALE

C-32.0.2	TYPICAL INSTALLATION OF 15 OR 25 KV S & C TYPE PME DEAD FRONT THREE PHASE PAD MOUNTED SWITCHGEAR	C-32.0.2

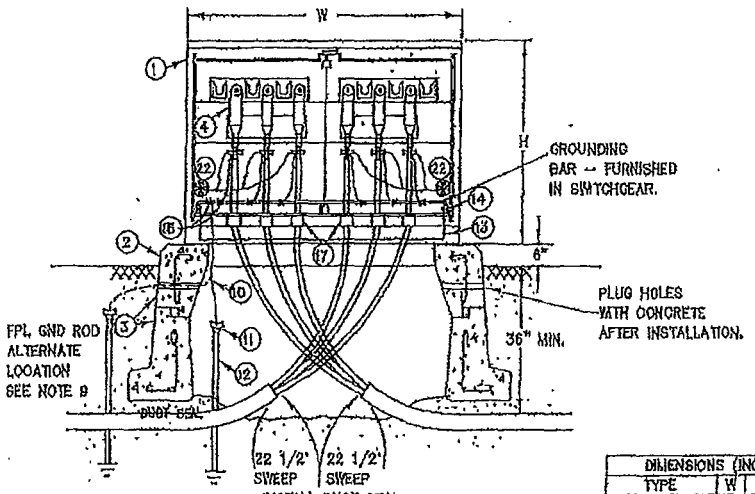

600 AMP FEEDER SIDE
SECTION A-A

DIMENSIONS (INCHES)					WEIGHT IN LBS.*
TYPE		W	D	H	
15 KV	PME-9	75	67	50	2300
	PME-11	75	73	50	2350
	PME-10	75	73	50	2400
25 KV	PME-9	84	82	56	2800
	PME-11	84	88 1/2	56	2950
	PME-10	84	88 1/2	56	3000

* ADD 150 LBS. FOR STAINLESS STEEL.

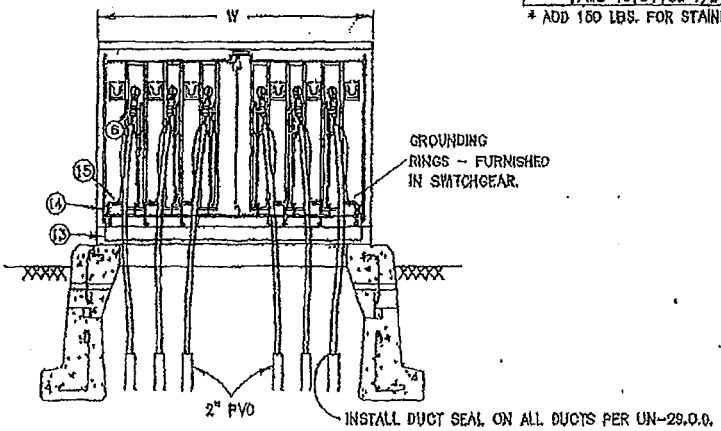

FUSE SIDE (PME-9 SHOWN)
SECTION B-B

F P L
OH & UG DISTRIBUTION SYSTEM STANDARDS

NO.	DATE	REVISION	ORIG.	DRAWN	APPR.
2	7/21/01	UPDATE DRAWING ADDED PME-10 AND CHANGED SOME TEXT	RAP	JES	JJM
1	9/30/94	ADDED ARROW TO INCLUDE TOP CHAMBER SECTION ③	RJO	BAQ	RJS

ORIGINATOR: RWS DRAWN BY: JRG
DATE: 6/30/93 APPROVED: R.J. SALESKY
DIRECTOR, DISTRIBUTION ENGINEERING AND OPERATIONS SERVICES
NO SCALE

C-32.0.3	TYPICAL INSTALLATION OF 15 OR 25KV S&C TYPE PME DEAD FRONT THREE PHASE PAD MOUNTED SWITCHGEAR	C-32.0.3

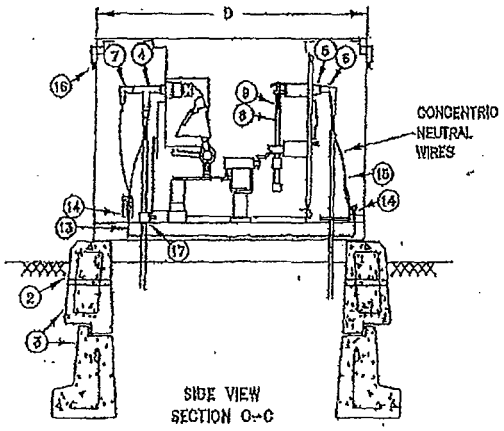

NOTES:

1. WHEN CHANGING OUT A LIVE FRONT PAD MOUNTED SWITCH TO A DEAD FRONT PAD MOUNTED SWITCH, IT IS IMPORTANT TO ENSURE THAT THE REPLACEMENT DEAD FRONT SWITCH HAS THE SIX INCH ADAPTER BASE SPACER. THE NEW SWITCH MUST BE INSTALLED WITH THE SAME ORIENTATION AS THE OLD SWITCH IN ORDER TO ENSURE THAT THE ADAPTER BASE SPACER MATCHES THE NEW SWITCH CORRECTLY TO THE ORDER, SMALLER SIZED PAD. NOTE: IT IS NO LONGER REQUIRED TO CHANGE OUT THE TOP PAD PORTION OF THE CHAMBER. USE 600 AMP REPLACEMENT ELBOWS (M & S # 183-50256-7), AS SHOWN IN DCS UH-40.0.0, FOR THE FEEDER CABLES AND 200 AMP REPAIR ELBOWS (VARIOUS M & S NUMBERS), AS SHOWN IN UH-78.0.0 FOR THE LOOP SIDE PRIMARY CABLES.
2. CABLES MUST NOT BE IN CONTACT WITH THE EDGE OF CHAMBER FOOTING. TOP VIEW SHOWS CORRECT ROUTING FOR FEEDER CABLES THAT IS NECESSARY TO PROVIDE FOR CABLE MOVEMENT.
3. PRIMARY CABLES MUST BE ABLE TO REACH PARKING LOCATIONS.
4. ALLOW SUFFICIENT LENGTH OF CONCENTRIC NEUTRAL TO REACH GROUNDING BARS AND PERMIT FREE MOVEMENT OF ELBOWS.
5. BRASS STUDS FURNISHED WITH THE 600 AMP ELBOW KITS MUST BE INSTALLED AND TIGHTENED SECURELY (85 FT. LBS.) IN THE 600 AMP BUSHINGS. THE SHORT THREADED END OF THE STUD GOES INTO THE BUSHING. SEE UH-41.0.1 AND UH-41.0.2 FOR 600 AMP ELBOW DETAILS.
6. INSTALL 600 AMP 3ø FAULT INDICATORS ON EACH SET OF FEEDER CABLES, SEE UV-14.0.0, UV-14.0.1, UV-14.0.2.
7. LOOP SIDE PRIMARY CABLES (#1/0A) MUST GO THRU CABLE GUIDES TO AVOID CONFLICT WITH FUSE DOOR WHEN IT IS ROTATED TO OPEN.
8. CABLE SPOOLS (2 1/2") SHOULD BE USED ON THE FEEDER CABLE TO CORRECTLY POSITION THE CABLES FOR EASIER INSTALLATION OF THE BOLT-ON ELBOW TERMINATORS ON TO THE 600 AMP BUSHINGS. THE 600 AMP ELBOWS MUST BE BE INSTALLED PERFECTLY STRAIGHT (VERTICALLY AND HORIZONTALLY) ONTO THE 600 AMP BUSHINGS TO PROPERLY ENGAGE THE THREADS. THE SPOOLS ARE TO BE BOLTED TO THE BOTTOM FLANGE OF THE SWITCH COMPARTMENT WALL WITH 3/8" X 1 1/2" BOLTS THRU EXISTING HOLES PROVIDED BY THE SWITCH MANUFACTURER.
9. MAKE CERTAIN OF CABLE LOCATIONS BEFORE DRIVING GROUND RODS. WHEN INSTALLING GROUND RODS IN ALTERNATE LOCATION, INSURE THAT BOTH THE TOP OF THE ROD AND THE #4O WIRE ARE AT LEAST 3" BELOW GRADE AND ARE COVERED. EXISTING 3/4" HOLES SHOULD BE USED IF AT LEAST 3" BELOW GRADE.
10. APPLY CAULKING COMPOUND TO SEAM BETWEEN PAD MOUNTED SWITCH AND PAD CHAMBER.
11. UNUSED FUSE POSITIONS MUST HAVE BUSHINGS & PROTECTIVE CAPS INSTALLED. UNUSED FEEDER POSITIONS MUST HAVE 600 AMP PROTECTIVE CAPS (M&S #163-64500-7).
12. AFTER THE PADMOUNTED SWITCH IS INSTALLED, THE LIFTING BRACKETS MUST BE REMOVED AND STORED INSIDE THE CABINET OR TURNED DOWN SO THAT THEY DO NOT PROTRUDE ABOVE THE TOP OF THE CABINET.
13. ENSURE THAT THE "CAUTION" LABEL (M&S #548-58010-4) IS INSTALLED ON EACH SIDE OF THE SWITCH HAVING ACCESS TO THE HIGH VOLTAGE SWITCH AND/OR THE HIGH VOLTAGE FUSE COMPARTMENTS PER DCS Z-35.0.0.
14. SEAL DUCTS PER UH-29.0.0.

SUPERSEDES C-32.0.3 LAST REVISED ON 9-30-94

FPL

OH & UG DISTRIBUTION SYSTEM STANDARDS

NO.	DATE	REVISION	ORIG.	DRAWN	APPR.
3	8/20/02	UPDATE DWG. (NOTE 1)	CEA	JES	JJM
2	8/13/01	UPDATE DWG. (NOTES 10, 12, 13, & 14)	CEA	JES	JJM
1	8/09/98	ADDITION TO NOTE 11	PMG	RAS	JJM

ORIGINATOR: PMG DRAWN BY: RAS

DATE: 9/30/94 APPROVED: J.J. MCEVOY SUPERVISOR, OH/UG PRODUCT SUPPORT SERVICES NO SCALE

C-32.0.4	TYPICAL INSTALLATION OF 15 OR 25KV S&C TYPE PME DEAD FRONT THREE PHASE PAD MOUNTED SWITCHGEAR	C-32.0.4

MATERIAL LIST

ITEM	DESCRIPTION			QUANTITY	M&S NO.
1	15KV SWITCHGEAR	PME-9	(2-THREE PHASE FEEDER POSITIONS AND 6 FUSE POSITIONS	1	STANDARD 270-67400-7 STAINLESS STEEL 270-67401-5
		PME-11	(3-THREE PHASE FEEDER POSITIONS AND 3 FUSE POSITIONS	1	STANDARD 270-67900-9 STAINLESS STEEL 270-67901-7
		PME-10	(4-THREE PHASE FEEDER POSITIONS AND NO FUSE POSITIONS	1	STANDARD 270-683-000 STAINLESS STEEL 270-683-050
	25KV SWITCHGEAR	PME-9	(2-THREE PHASE FEEDER POSITIONS AND 6 FUSE POSITIONS	1	STANDARD 270-67200-4 STAINLESS STEEL 270-67201-2
		PME-11	(3-THREE PHASE FEEDER POSITIONS AND 3 FUSE POSITIONS	1	STANDARD 270-68100-3 STAINLESS STEEL 270-68101-1
		PME-10	(4-THREE PHASE FEEDER POSITIONS AND NO FUSE POSITIONS	1	STANDARD 270-684-000 STAINLESS STEEL 270-684-050
2	PAD (TOP SECTION ONLY) FOR REPLACING IF WITH DF		FOR 15KV FOR 25KV	1	162-12203-5 162-12205-1
3	PAD & CABLE CHAMBER (TOP & BOTTOM SECT.)		FOR 15KV FOR 25KV	1	162-12201-9 162-12202-7
4	DEAD FRONT TERMINATOR, 1000 KCMIL AL		15KV 25KV	VARIES	163-63900-7
5	LOADBREAK BUSHING, 200 AMP		15KV 25KV	VARIES	163-05100-1 163-05400-1
6	ELBOW TERMINATOR, 1/0 AL		15KV 25KV	VARIES	163-56700-7 163-50200-1
7	PROTECTIVE CAP 200 AMP	(15KV SWITCHES ONLY)		VARIES	163-02200-0
	ELBOW SURGE ARRESTER	(25KV SWITCHES ONLY)		VARIES	334-01800-5
8	SME-4Z FUSE HOLDERS		15KV 25KV	VARIES	531-56150-1 531-56310-5
9	FUSES: REFILL UNITS FOR SVE-4Z, SM-4Z&SML-4Z FUSE HOLDERS 15KV: 20 AMP 531-38700-5; 30 AMP 531-38800-1; 50 AMP 531-38900-6; 65 AMP 531-39500-8; 80 AMP 531-39601-6; 100 AMP 531-39800-4; 125 AMP 531-39800-7; 150 AMP 531-40200-4; 175 AMP 531-40300-1; 200 AMP 531-39000-6 25KV: 10 AMP 531-32700-2; 15 AMP 531-32800-0; 20 AMP 531-32900-8; 30 AMP 531-33000-3; 40 AMP 531-33100-0; 50 AMP 531-33200-6; 65 AMP 531-33300-2; 80 AMP 531-33400-9; 100 AMP 531-33500-5; 125 AMP 531-33700-8; 150 AMP 531-33800-4; 175 AMP 531-33900-1; 200 AMP 531-34000-9				NOTE: THE FUSE REFILLS ARE THE SAME AS THOSE USED IN LIVEFRONT SWITCHES
10	WIRE #10 SOB			8	112-30900-0
11	CONNECTOR, GROUND ROD, CLAMP TYPE			1	120-03610-6
12	COPPERWELD GROUND RODS AS REQUIRED GROUND ROD COUPLINGS			VARIES	130-61400-6 130-40510-4
13	#4/00 CABLE, 600V			27	110-10108-1
14	CONNECTOR #4/0 COPPER CABLE TO FLAT			6	120-87100-5
15	CONNECTOR, COPPER TO COPPER, BOLTED		PME-9 PME-11 PME-10	19 22 25	102-80000-2
16	LOCK STANDARD PADLOCK, SMALL		PME-9 PME-11 PME-10	4 5 6	548-24601-1
17	CABLE SPOOL, 2 1/2"		PME-9 PME-11 PME-10	6 9 12	180-30600-7
18	BOLT, 3/8" X 1 1/2" (FOR SPOOLS)			SAME AS SPOOLS	161-47800-2
19	NUT, 3/8" (FOR SPOOLS)			SAME AS SPOOLS	161-45000-4
20	WASHER FLAT 3/8" (FOR SPOOLS)			SAME AS SPOOLS	145-35900-6
21	LOCKWASHER, 3/8" (FOR SPOOLS)			SAME AS SPOOLS	161-62400-8
22	FAULT INDICATOR, 800 AMP, 3 PHASE		PME-9 PME-11 PME-10	2 3 4	163-29700-9

SUPERSEDE C-32.0.4 LAST REVISED ON 9-30-94

REPLACEMENT PARTS FOR SWITCHES
600 AMP BUSHINGS 15KV 274-00200-3
25KV 274-00300-0
200 AMP BUSHING WELLS 15KV 274-00220-8
25KV 274-00320-4

F P L
OH & UG DISTRIBUTION SYSTEM STANDARDS

ORIGINATOR: PMG DRAWN BY: RAS

NO.	DATE	REVISION	ORIG.	DRAWN	APPR.
2	08/06/01	ADDED PME-10 SWITCH	CEA	JES	JJM
1	8/09/98	ADDITION TO ITEM 12	PMG	RAS	JJM

DATE: 9/30/84 APPROVED: J.J. MCEVOY SUPERVISOR, OH/UG PRODUCT SUPPORT SERVICES

NO SCALE

UX-113

CONCRETE FOUNDATION FOR S&C 3Ø PADMOUNTED SWITCH

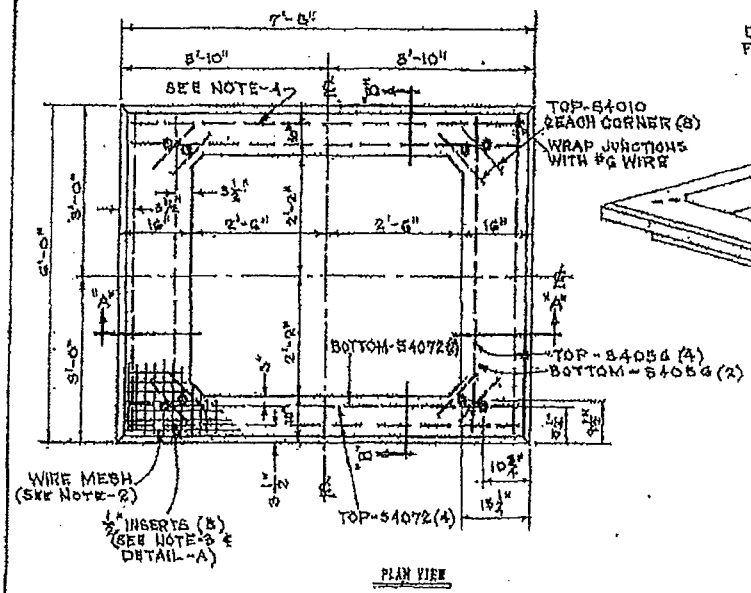

PLAN VIEW

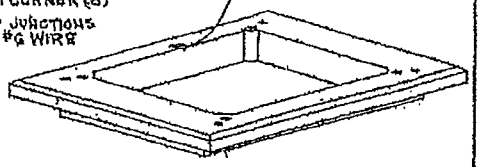

WEIGHT - 2745 LB.
CU. FT. - 18.8
CU. YD. - 0.68
1245 - KILOGRAMS
519 - LITERS
0.519 - CU. METERS

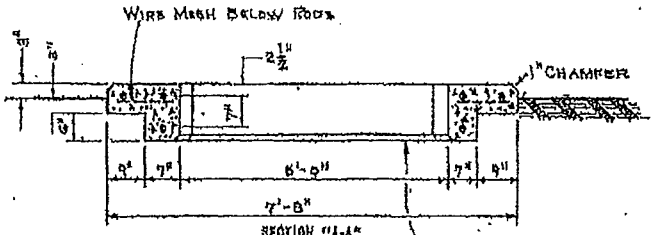

SECTION "A-A"

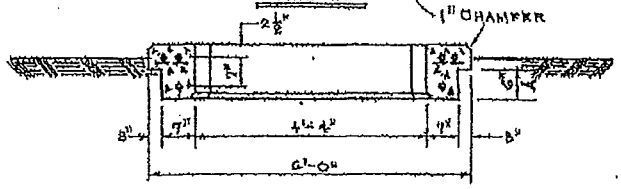

SECTION "B-B"

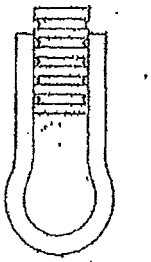

DETAIL "A"

1. Top surface to be smooth and level, surface irregularities are not acceptable.
2. 4 x 4 No.4 Welded Wire Mesh Reinforcing to stop 2" from Sides and Opening of Foundation.
3. Superior Threaded Inserts, 1/2" with Plug, Electro-Galv., 4 Required. (See Detail A)
4. #4 Reinforcing Rod as shown.
5. 4000 Lb. Test Concrete.
6. For use with S & C Switches, M & S Nos. 220-863, 270-854, 270-855 & 270-880.
7. Manufacturers Identification, Year of Manufacture, and FPL No. M & S Number to be cast in top surface of pad near center of pad. (This required when precast.)

NO.	DATE	REVISION	BY	CH	CDA	APP
1	2-8-72	CORRECTED DIMENSION				

DRAWN
CHECKED
CHECKED

APPROVED: CHIEF ENGINEER

STANDARDS
UNDERGROUND DISTRIBUTION SYSTEM
FLORIDA POWER & LIGHT COMPANY
DATE 12-28-71 NO SCALE

****** NOTICE******

- CALL SUNSHINE 1-800-432-4770 48HOURS BEFORE YOU DIG FOR UNDERGROUND LOCATIONS.
- NOTIFY FPL REP. FOR INSPECTION OF TRENCH DEPTH & PVC INSTALLATION PRIOR TO BACKFILLING TRENCH.

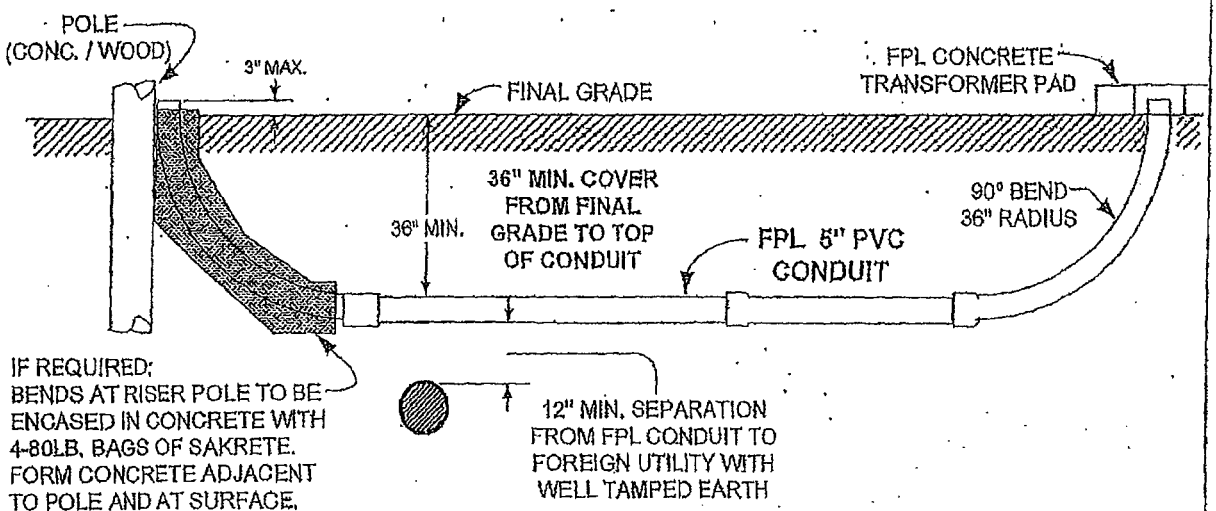

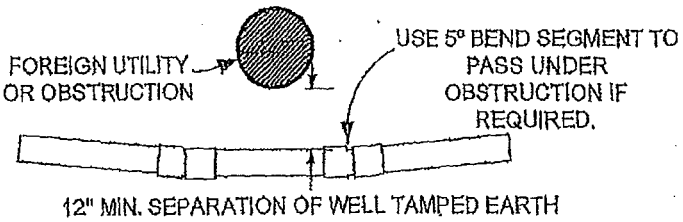

FPL CONDUIT CROSSING UNDER A FOREIGN UTILITY

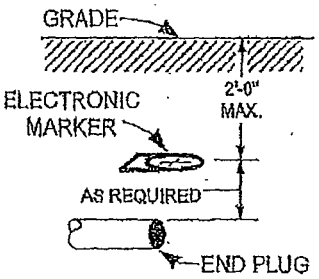

DUCT END MARKING
(IF REQUIRED)

NOTES:

- BACK-FILL WITHIN 4" OF THE CONDUIT TO BE FREE OF MATERIAL THAT MAY DAMAGE CONDUIT SYSTEM (BOARDS, ROCKS LARGER THAN 1" IN DIAMETER, DEBRIS, ETC.)
- IF COMPACTION OF TRENCH ROUTE IS REQUIRED FOR PAVING, ETC. BEGIN MACHINE COMPACTION 6" MINIMUM ABOVE CONDUIT.
- WHERE 36" OF COVER CANNOT BE MAINTAINED, 30" OF COVER WILL BE ALLOWED WITH 3" OF CONCRETE ENCASEMENT AROUND THE CONDUIT. (N.E.S.C. RULE FOR PRIMARY VOLTAGES)
- INSTALL A CONTINUOUS LENGTH OF PULL STRING IN ALL CONDUIT RUNS.

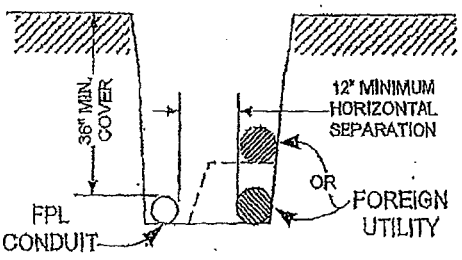

INSTALLATION OF FPL CONDUIT PARALLEL WITH - OR - IN A SHARED TRENCH WITH A FOREIGN UTILITY.

MATERIAL LIST 5" PVC SCH 40 CONDUIT	
20' LENGTH (BELLED END)	164-33800-1
90° BEND 36" RADIUS	164-25250-5
90° BEND 48" RADIUS	164-25200-9
45° BEND 48" RADIUS	164-61400-8
5° BEND SEGMENT	164-56100-1
22.5° SWEEP 12'-6" RADIUS	164-13000-1
STRAIGHT COUPLING	164-44900-7
REPAIR SLEEVE 6' LONG	164-47530-0
END PLUG	164-53500-1
ELECTRONIC MARKER	590-61601-5

FPL SUPPLIED 5" PVC CONDUIT

TYPICAL CUSTOMER INSTALLATION DETAILS

(PORTIONS OF UN-6, UN-15, CONC. & PAD DETAILS)

****** NOTICE******

- CALL SUNSHINE 1-800-432-4770 48HOURS BEFORE YOU DIG FOR UNDERGROUND LOCATIONS.
- NOTIFY FPL REP. FOR INSPECTION OF TRENCH DEPTH & PVC INSTALLATION PRIOR TO BACKFILLING TRENCH.

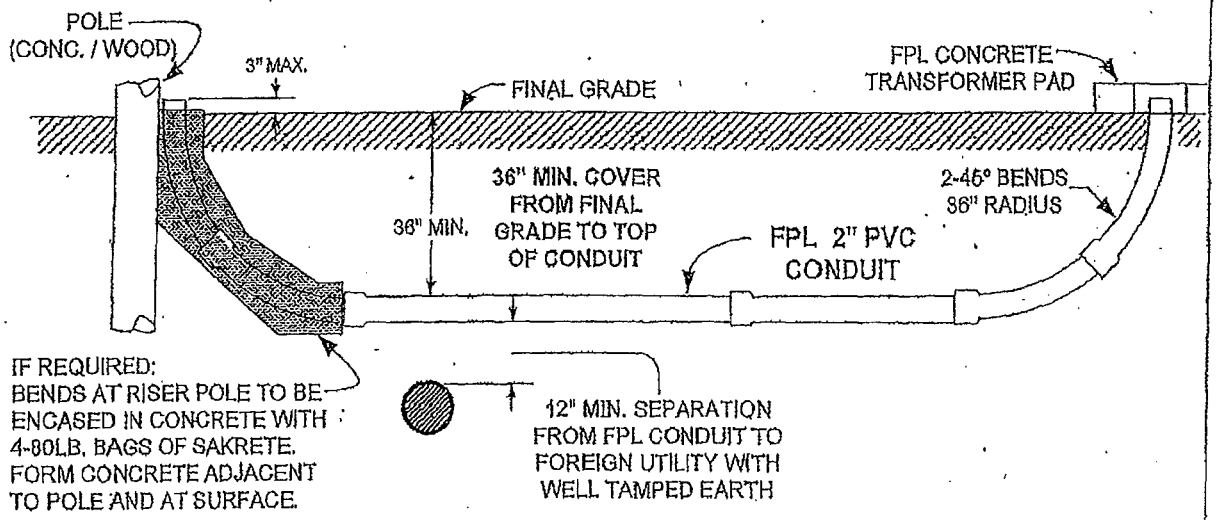

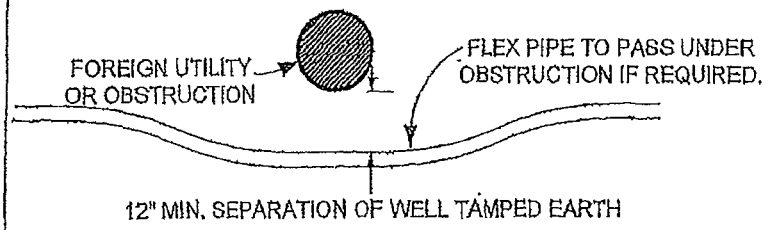

FPL CONDUIT CROSSING UNDER A FOREIGN UTILITY

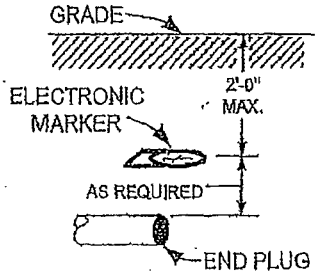

DUCT END MARKING
(IF REQUIRED)

NOTES:

- BACK-FILL WITHIN 4" OF THE CONDUIT TO BE FREE OF MATERIAL THAT MAY DAMAGE CONDUIT SYSTEM (BOARDS, ROCKS LARGER THAN 1" IN DIAMETER, DEBRIS, ETC.)
- IF COMPACTION OF TRENCH ROUTE IS REQUIRED FOR PAVING, ETC. BEGIN MACHINE COMPACTION 6" MINIMUM ABOVE CONDUIT.
- WHERE 36" OF COVER CANNOT BE MAINTAINED, 30" OF COVER WILL BE ALLOWED WITH 3" OF CONCRETE ENCASEMENT AROUND THE CONDUIT. (N.E.S.C. RULE FOR PRIMARY VOLTAGES)
- INSTALL A CONTINUOUS LENGTH OF PULL STRING IN ALL CONDUIT RUNS.

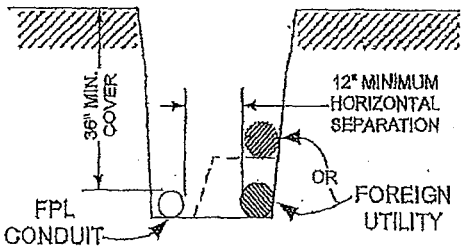

INSTALLATION OF FPL CONDUIT
PARALLEL WITH - OR - IN A SHARED TRENCH
WITH A FOREIGN UTILITY.

MATERIAL LIST 2" PVC SCH 40 CONDUIT	
20' LENGTH (BELLED END)	164-33100-6
90° BEND 24" RADIUS	164-23800-6
45° BEND 36" RADIUS	164-23945-2
45° BEND 24" RADIUS	164-23900-2
STRAIGHT COUPLING	164-47000-6
REPAIR SLEEVE 4" LONG	164-47520-2
END PLUG	164-54800-5
ELECTRONIC MARKER	590-61601-5

FPL SUPPLIED 2" PVC CONDUIT

TYPICAL CUSTOMER INSTALLATION DETAILS
(PORTIONS OF UN-6, UN-15, CONC.& PAD DETAILS)

L-17.0.7	SHEAR BOLT SECONDARY CONNECTORS IN HANDHOLE FOR CONNECTING 2 TO 4 SERVICES	L-17.0.7

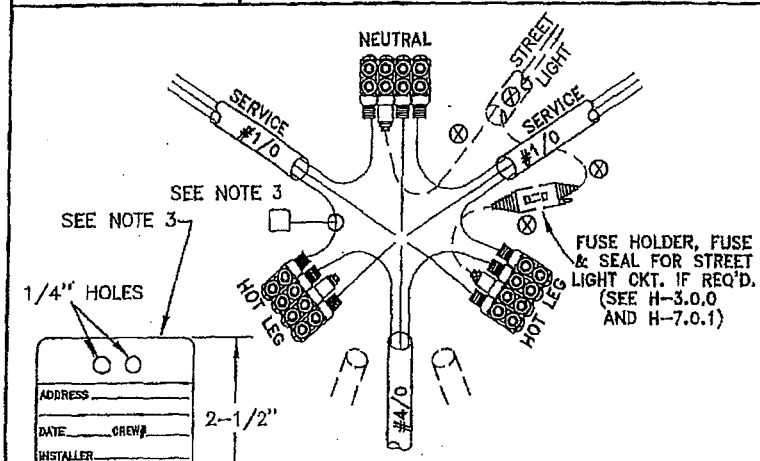

M&S # 549-378-009

4 PORT SHEAR BOLT CONNECTOR (PIRANHA) CONNECTION DIAGRAM FOR 1 - 2 SERVICE M&S #163-066-008

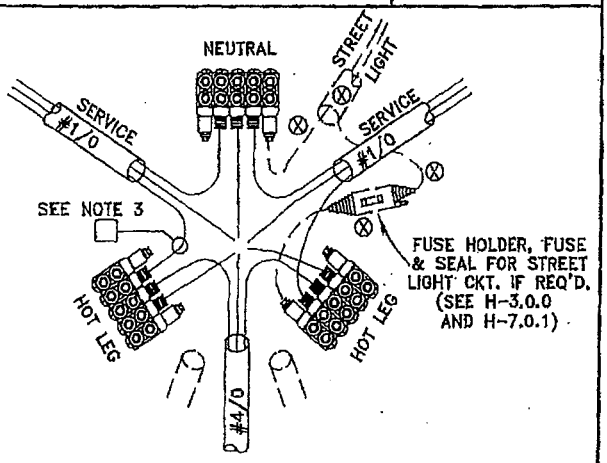

5 PORT SHEAR BOLT CONNECTOR (PIRANHA) CONNECTION DIAGRAM FOR 3 - 4 SERVICE M&S #163-066-009

NOTES:
1. FOR ONE SERVICE, SEE UC-5.0.0, UC-6.0.0 AND UC-6.0.2.
2. ONLY INSULATED CONDUCTORS MAY BE CONNECTED TO SHEAR BOLT CONNECTORS.
3. INSTALL TAG M&S #549-378-009 EVERYTIME A CONNECTOR IS INSTALLED OR REPLACED.
4. FOR ADDITIONAL INFORMATION REFER TO L-17.0.9, L-17.0.10 AND L-17.0.11.
5. FOR 24" AND 30" HANDHOLES INSTALL ALL CONDUITS AT ONE END OF THE HANDHOLE. BOTH THE 24" AND 30" HANDHOLES COME WITH A SPECIAL STENCIL "TO PLACE ALL CONDUITS AT THE END OF THE HANDHOLES". THIS ALLOWS THE CONDUCTOR TO BE LIFTED OUT OF THE HANDHOLE AND WORK THE CONNECTORS ABOVE GROUND.
6. WHEN FIELD CONDITIONS DICTATE THE USE OF FIVE OR MORE CONDUCTORS, IT MAY BE BEST TO CONSIDER THE USE OF THE 30" HANDHOLE, AS THIS WILL ALLOW ADDITIONAL ROOM TO WORK THE CONNECTIONS.

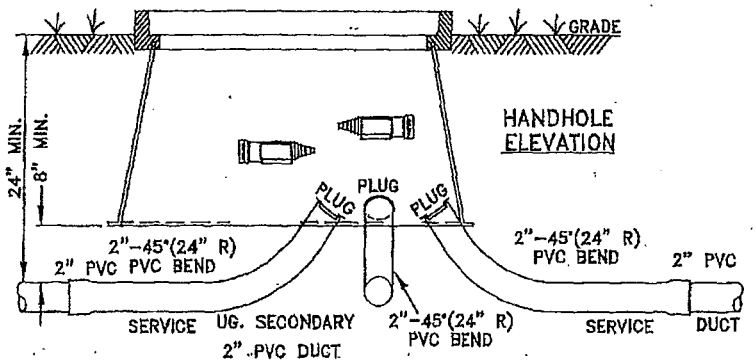

TABLE 1

CABLES	CONNECTORS	HANDHOLE
1/0 SECONDARY, 1/0 SERVICE AND 12CU FOR STREET LIGHT	163-066-008 (4 PORT)	162-304-001 (15.5"X10.5"X18" DEEP)
4/0 SECONDARY, AND 1 OR 2 SERVICES	163-066-008 (4 PORT)	162-120-008 (24"X13"X18" DEEP)
4/0 SECONDARY, AND 3 OR 4 SERVICES	163-066-009 (5 PORT)	162-120-008 (24"X13"X18" DEEP)
250 MCM TO 350 MCM	163-066-010 (5 PORT)	162-100-007 (30"X17"X18" DEEP)
350 MCM TO 500 MCM (NO MORE THAN 4 SETS)	163-066-011 (5 PORT)	162-100-007 (30"X17"X18" DEEP)
400 MCM TO 500 MCM (NO MORE THAN 4 SETS)	163-017-502 (6 PORT)	162-100-007 (30"X17"X18" DEEP)
400 MCM TO 500 MCM (NO MORE THAN 5 SETS)	163-017-502 (6 PORT)	162-121-004 (48"X30"X36" DEEP)
600 MCM TO 750 MCM	163-017-502 (6 PORT)	162-121-004 (48"X30"X36" DEEP)

FOR DRIVEWAY LOADING USE HANDHOLE 162-122-892 (50"X32"X36" DEEP)

17	11/11/14	UPDATE TABLE	ARR	ELS	RDH
16	4/23/14	UPDATE DRAWING AND NOTES	ARR	ELS	RDH
15	12/28/10	UPDATE DRAWING AND NOTES	ARR	ELS	BXN
14	11/3/09	ADDED NEW 5 PORT PIRANHA FOR 250-350 MCM CABLES	ARR	ELS	JRD
13	6/15/09	UPDATE DRAWING AND NOTES	ARR	ELS	AEL
12	11/7/08	UPDATE DECAL	GAP	ELS	AEL
11	10/5/08	UPDATE DRAWING & NOTES	RJO	ELS	JJM
10	9/24/08	ADD NOTE 3	AR	ELS	JJM
9	9/6/07	UPDATE NOTE 1	AR	ELS	JJM
8	8/27/07	REMOVE EXAMPLE OF CUTTING FLOOD SEAL	RJO	ELS	JJM
7	8/16/05	UPDATE NOTES	SMS	ELS	JJM
6	2/24/05	UPDATE DRAWING AND NOTES	RJO	ELS	JJM
5	11/18/03	UPDATE NOTES	RJO	ELS	JJM
4	8/18/03	UPDATE DRAWING (NOTES & TEXT)	SMS	ELS	JJM
3	8/08/01	UPDATE DRAWING (NOTES & TEXT)	SMS	JES	JJM
2	9/07/99	UPDATE DRAWING (CHARTS & TEXT)	SMS	JES	JJM
1	8/09/96	ADDED MULTITAP CONNECTOR NUMBER, ADDED DRIVEWAY LOADING M&S NUMBER, CHANGED MULTITAP AND ADDED NOTE.	BB	AWB	JJM
0	6/30/93	ORIGINAL DRAWING	SMS	RAS	JJM

FPL
OH & UG DISTRIBUTION SYSTEM STANDARDS

ORIGINATOR: SMS DRAWN BY: RAS

DATE: 8/09/96 APPROVED: J.R. "PEPE" DIAZ
RELIABILITY ENGINEERING MANAGER

NO SCALE

L

UN-18.0.0	FEEDER SPLICE BOX	UN-18.0.0

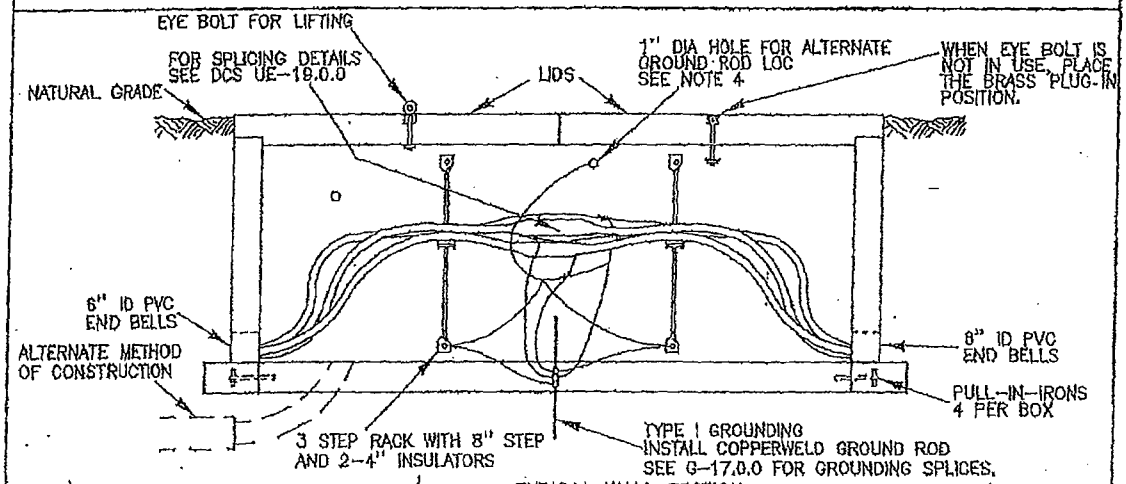

TYPICAL WALL SECTION

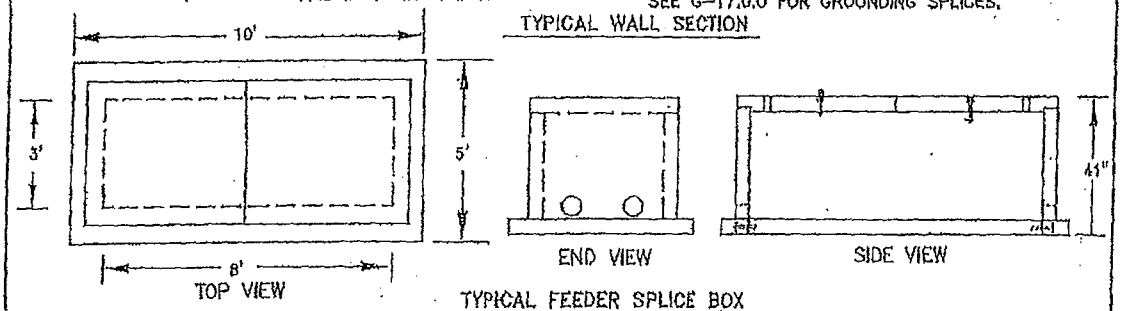

TYPICAL FEEDER SPLICE BOX

M&S NUMBER	DESCRIPTION
162-240-003	CONCRETE FEEDER SPLICE BOX & LIDS.
162-241-000	CONCRETE FEEDER SPLICE BOX & LIDS COMES WITH SPECIAL BRUSHED SIDEWALK FINISH LIDS AND FLUSH INSERTS SUITABLE FOR PEDESTRIAN TRAFFIC.
162-242-203	POLYMER CONCRETE FEEDER SPLICE BOX, TO BE INSTALLED ONLY IN NON ACCESSIBLE AREAS, NOT TO BE SUBJECTED TO ANY VEHICULAR TRAFFIC SUCH AS STREETS, PARKING LOTS OR DRIVEWAYS.

NOTES:

1. LEAVE SUFFICIENT EXPOSED GROUND ROD TO INSTALL 6 EACH #4/0-#2 CONNECTORS M&S #120-118-005.
2. GROUND ALL SPLICES PER DISTRIBUTION STANDARD G-17.0.0.
3. GROUND CABLE RACKS.
4. EACH SPLICE BOX IS SUPPLIED WITH 2-1" DIA HOLE FOR ALTERNATE GROUND ROD LOCATION. MAKE ALL GROUNDING CONNECTIONS INSIDE THE BOX. RUN SUFFICIENT AMOUNT OF 4/0 TO MAKE CONNECTION TO ALT. GROUND ROD LOCATION. RESEAL 1" DIA HOLE WITH AQUASEAL.
5. DISTRIBUTION SPLICE BOX AND LIDS ARE DESIGNED FOR H-20 VEHICLE LOADING. (FULL TRAFFIC LOADING)
6. WEIGHT OF SPLICE BOX (W/O LIDS) =6700 LBS. DIMENSIONS ARE 10' X 5' X 41" DEEP
7. WEIGHT OF EACH LID=1400 LBS. TWO LIDS REQUIRED. M & S # FOR LID ONLY 162-240-011.
8. URD FEEDER CABLE SPLICES MUST BE BONDED TO DRIVEN GROUNDS.
9. REFER TO UE-19.1.1 & UE-19.1.2 FOR SPLICE ASSEMBLY. A WATER TIGHT SEAL MUST BE MADE WHERE INSULATED
10. CONDUCTORS CONNECT TO SYSTEM NEUTRAL. SEE G-17.0.0
11. THE MAXIMUM PERMISSIBLE IMPEDENCE TO SYSTEM NEUTRAL FOR A DRIVEN GROUND IS 25 OHMS.
12. AS SHOWN ABOVE, THE PVC MAY ENTER UNDERNEATH THE SPLICE BOX BY USING A 45 DEGREE SWEEP, SEAL CONDUIT WITH DUCT SEAL.
13. IN AREAS SUBJECT TO WATER INTRUSION, INSTALL A SUFFICIENT AMOUNT OF PEAROCK 1/4"-3/4" SIZE ROCK TO ALLOW FOR THE PERCOLATION OF THE WATER.
14. IF FEEDER SPLICE BOX IS TO BE INSTALLED IN A SIDEWALK, A SEPERATION WILL BE NEEDED BETWEEN THE CONCRETE AND THE LIDS.
15. REFER TO UX-233.0.1

FPL

OH & UG DISTRIBUTION SYSTEM STANDARDS

UN

ORIGINATOR: RAP DRAWN BY: J. SHOUP

NO.	DATE	REVISION	ORIG.	DRAWN	APPR.
0	8/16/05	ORIGINAL DRAWING	RJO	ELS	JJM

DATE: 8/27/99 APPROVED: J. McEVOY SUPERVISOR, OH/UG PRODUCT SUPPORT SERVICES

NO SCALE

J-4.0.0	PAD-MOUNTED CAPACITOR BANK INSTALLATIONS	J-4.0.0

WE HAVE TWO STANDARD 1200 KVAR PAD-MOUNTED, CAPACITOR BANKS. THEY ARE PRESENTLY OPERATED AS FIXED BANKS, BUT MAY BE REMOTELY SWITCHED IN THE FUTURE.

223-388-508 13KV. PAD-MOUNTED, DEADFRONT, STAINLESS STEEL ENCLOSURE, 3 PHASE, 1200 KVAR CAPACITOR BANK TO INCLUDE: A POTENTIAL TRANSFORMER, VACCUMM SWITCHES, DOUBLE BUSHING CAPACITOR CANS, (7.62KV, 400 KVAR), X-LIMITER FUSES (80A), BUSHING WELLS (200A), PARKING STANDS, METER SOCKET AND CONTROL WIRING FOR RADIO RECEIVER.

223-388-001 23KV. PAD-MOUNTED, DEADFRONT, STAINLESS STEEL ENCLOSURE, 3 PHASE, 1200 KVAR CAPACITOR BANK TO INCLUDE: A POTENTIAL TRANSFORMER, VACUUM SWITCHES, DOUBLE BUSHING CAPACITOR CANS, (13.2 KVAR), 400 KVAR), X-LIMITER FUSES (50A), BUSHING WELLS (200A), PARKING STANDS, METER SOCKET AND CONTROL WIRING FOR RADIO RECEIVER.

EITHER UNIT CAN MOUNT ON FOUNDATION UX-108 (M&S 162-251-005). THE FOUNDATION, ARRESTERS, AND ROTATABLE BUSHINGS ARE INCLUDED IN THE FOLLOWING MECA UNIT.

EITHER UNIT CAN BE USED IN SALT-SPRAY AREAS.

A	B	C	D	E	F	G	H
C			1200	T	E		

J

DETAILS OF INSTALLATION:

1. THE UNITS ARE TO BE INSTALLED NO MORE THAN 100FT FROM A DEAD-FRONT, PADMOUNTED SWITCH CABINET, ONLY. LIVE FRONT CABINETS SHOULD BE CHANGED OUT FOR THIS APPLICATION.
2. THE UNIT WILL BE SERVED WITH 1/0, 25KV CABLE FROM THE BACK (200-AMP INTERFACE) OF THE ARRESTERS PRESENTLY FOUND IN THE CABINET, BUT THESE ARRESTERS MAY BE RE-USED IN THE CAP BANK UNIT.
3. INSTALL ROTATABLE, FEED-THRU BUSHINGS ON THE 23KV URD CAPACITOR BANK (ONE SIDE FOR THE ARRESTER ELBOW AND ONE SIDE FOR THE PRIMARY ELBOW COMING FROM THE PADMOUNTED SWITCH CABINET). NOTE: THIS ONLY APPLIES TO 23KV UNITS, SINCE IT IS TYPICALLY, NOT NECESSARY, TO PROTECT 15KV URD SYSTEMS, WITH ELBOW ARRESTERS.
4. THE PAD-MOUNTED BANK SITS ON A PRE-CAST CONCRETE PAD. REFER TO UX-108.
5. THE BANK IS PROTECTED, BY CURRENT-LIMITING FUSES, AND HAS A POTENTIAL TRANSFORMER (INTERNALLY PROTECTED AND HOOKED UP TO THE LINE SIDE OF FUSES), WHICH POWERS THE VACUUM SWITCHES.
6. FAULT INDICATORS SHOULD BE INSTALLED AT BOTH THE PADMOUNTED SWITCH CABINET AND THE CAPACITOR CABINET TO DISTINGUISH BETWEEN CAN OR CABLE FAILURE.
7. INSTALL SIGNS SHOWING "INSTRUCTIONS FOR SWITCHING" (M&S 548-223-000) AND "REPLACEMENT COMPONENTS" (M&S 548-223-100) ON INSIDE OF CABINET DOOR.

NOTES:
1. PADMOUNTED CAPACITOR BANKS REQUIRE 8' MINIMUM CLEARANCE IN FRONT AND REAR DOORS.

FPL
OH & UG DISTRIBUTION SYSTEM STANDARDS

4	9/17/13	UPDATE DRAWING (TEXT)	JJR	ELS	WM
3	4/5/13	UPDATE DRAWING (TEXT)	JJR	ELS	WM
2	5/21/12	UPDATE DRAWING (TEXT)	LFV	ELS	WM
1	7/24/04	UPDATE DRAWING (TEXT)	LFV	ELS	JJM

ORIGINATOR: LFV DRAWN BY: J. SHOUP

DATE: 07/25/01 APPROVED: J.J. MCEVOY
SUPERVISOR, OH/UG PRODUCT

NO SCALE

CAPACITOR BANK SWITCHING INSTRUCTIONS

J-4.0.1

THE FOLLOWING INSTRUCTIONS ARE TO BE PLACED INSIDE ALL PAD-MOUNTED CAPACITOR BANKS:

INSTRUCTIONS FRO SWITCHING PADMOUNTED CAPACITOR BANKS:

TO ENERGIZE THE BANK, FOLLOW THESE STEPS:

1. TURN RC OFF AT FEEDER BREAKER.
2. VERIFY THAT ELBOWS ARE PARKED AT BOTH FEEDER PAD-MOUNTED SWITCH CABINET AND CAPACITOR BANK CABINET.
3. VERIFY ALL GROUNDS/SHORTING STRAPS HAVE BEEN REMOVED FROM THE CAPACITOR CANS.
4. VERIFY THAT SEMAPHORES IN VACUUM SWITCHES ARE IN THE "OPEN" POSITION.
5. VERIFY THAT CURRENT LIMITING FUSES ARE INSTALLED, WITH THE BLOWN INDICATOR FACING DOWN.
6. PLACE REMS CONTROLLER SWITCH IN THE LOCAL POSITION.
7. CLOSE IN ELBOWS AT CAPACITOR CABINET.
8. CLOSE IN ELBOWS AT SWITCH CABINET.
9. PRESS THE RED (CLOSE) BUTTON ON THE REMS OR USE THE REMOTE HAND OPERATOR TO CLOSE VACUUM SWITCHES.
10. TURN RC ON AT FEEDER BREAKER.

TO SWITCH OUT AND ISOLATE THE BANK, FOLLOW THESE STEPS:

1. VERIFY THAT REMS CONTROLLER'S TOGGLE SWITCH IS PLACED IN THE POSITION.
2. PRESS GREEN TRIP BUTTON ON REMS RECEIVER BOX.
3. VERIFY THAT SEMAPHORES IN VACUUM SWITCHES SHOW OPEN.
4. ALLOW AT LEAST FIVE MINUTES THEN TEST FOR VOLTAGE OR CURRENT AT THE CAPACITOR CELLS.
5. OPEN, PARK, AND CAP ELBOWS AT FEEDER PAD-MOUNTED SWITCH CABINET.
6. OPEN, PARK, AND CAP ELBOWS AT CAPACITOR CABINET.
7. ATTACH ALL NECESSARY GROUNDS.

NOTE:
THE CAPACITOR CANS ARE TO BE ENERGIZED OR DE-ENERGIZED WITH THE VACUUM SWITCHES, ONLY. DO NOT USE THE LOAD-BREAK ELBOWS OR THE CURRENT-LIMITING FUSES FOR THE ACTIVITY.

J

PAD-MOUNTED CAPACITOR BANK-REPLACEMENT COMPONENTS:

CURRENT LIMITING FUSES:	
13KV, 80A, X-LIMITER	M&S 531-454-802
23KV, 50A, X-LIMITER	M&S 531-455-001
POTENTIAL TRANSFORMERS:	
13KV, INTERNALLY FUSED	M&S 461-088-059
23KV, INTERNALLY FUSED	M&S 461-088-105
CAPACITOR CANS:	
7620V, 400KVAR, TWO-BUSHING	M&S 225-402-130
13,200V, 400KVAR, TWO-BUSHING	M&S 225-402-230
VACUUM SWITCHES:	
13KV, 200A	M&S 275-108-120
23KV, 200A	M&S 275-108-130

F P L
OH & UG DISTRIBUTION SYSTEM STANDARDS

4	5/21/12	ADDED "PAD-MOUNTED"	JGV	ELS	WM
3	9/19/05	UPDATE DRAWING (M&S NUMBERS)	LFV	ELS	JJM
2	3/25/05	UPDATE DRAWING (M&S NUMBERS)	LFV	ELS	JJM
[illegible]	[illegible]	UPDATE DRAWING (TEXT)	LFV	ELS	JJM

ORIGINATOR: LFV DRAWN BY: J. SHOUP

DATE: 04/14/00 APPROVED: J.J. MCEVOY
SUPERVISOR, OH/UG PRODUCT

NO SCALE

J-4.0.2	TYPICAL INSTALLATION OF 25 KV S & C DEAD FRONT SWITCHGEAR AND THREE PHASE PAD-MOUNTED CAPACITOR BANK	J-4.0.2

NOTES:

1. INSTALL 92" X 92" PRECAST PAD (M&S 162-251-005)
2. DRIVE GROUND RODS & ATTACH #2 CU GROUND TO GROUNDING LUGS.
3. INSTALL URD CAPACITOR BANK (M&S 223-388-001) ON PAD.
4. INSTALL ROTATABLE FEED-THRU BUSHING 25KV (M&S 163-250-002) ON EACH BUSHING.
5. INSTALL 200 AMP ELBOWS ON ROTATABLE FEED-THRU BUSHINGS.
6. INSTALL 18KV ELBOW ARRESTERS (M&S 334-015-005) ON ROTATABLE FEED-THRU BUSHINGS.

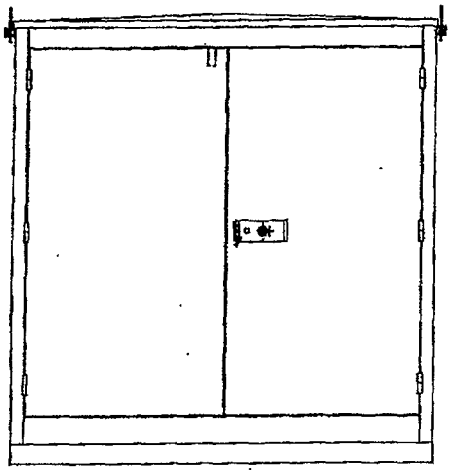

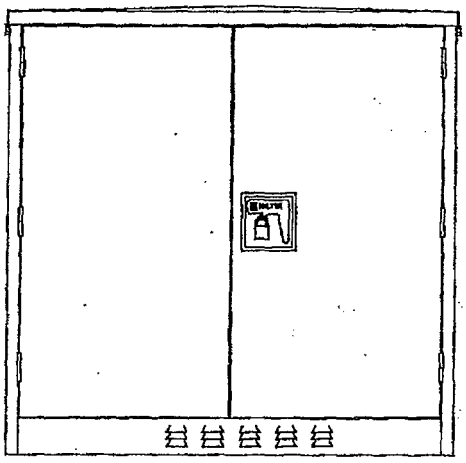

CAPACITOR CABINET

PAD-MOUNTED SWITCH CABINET

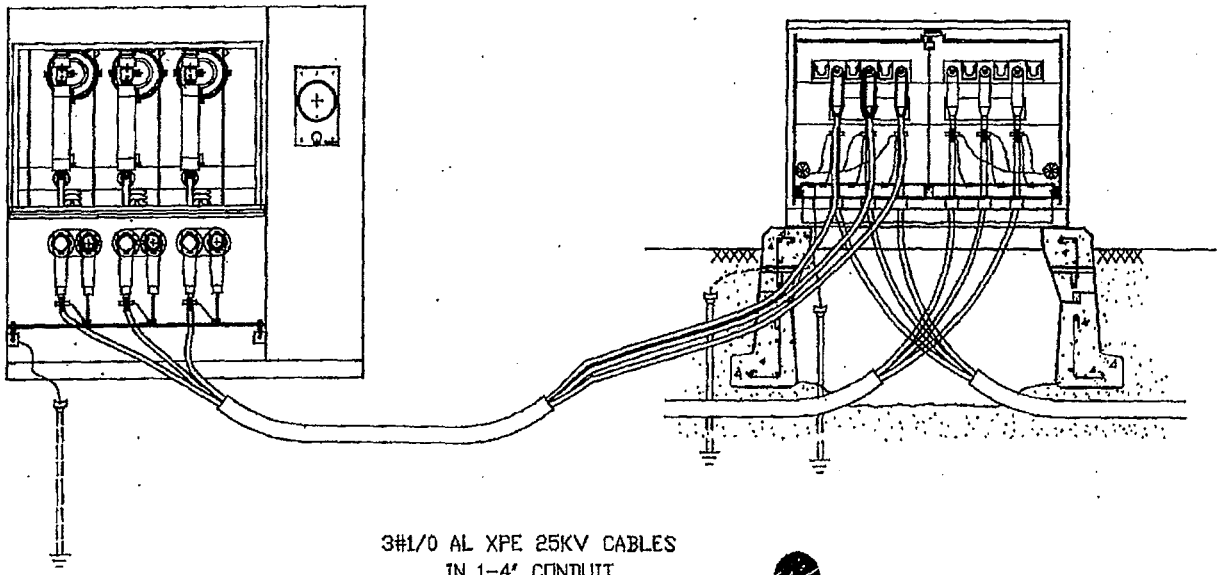

3#1/0 AL XPE 25KV CABLES
IN 1-4' CONDUIT
MAXIMUM OF 100 FEET

F P L

OH & UG DISTRIBUTION SYSTEM STANDARDS

				ORIGINATOR: LFV	DRAWN BY: J. SHOUP
...ADD "PAD MOUNTED"	JGV	ELS	WM	DATE: 07/26/01 APPROVED: J.J. MCEVOY SUPERVISOR, OH/UG PRODUCT	NO SCALE

J-4.0.3	MALTON 25KV, 200A, 125KV BIL, 1200KVAR PAD-MOUNTED CAPACITOR BANK	J-4.0.3

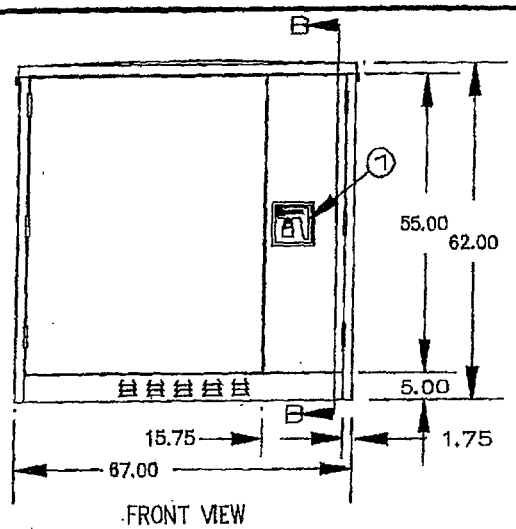

FRONT VIEW

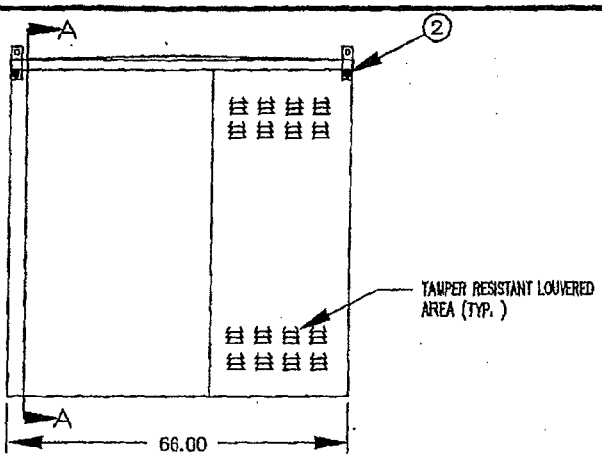

RIGHT SIDE VIEW

ITEM	QTY	DESCRIPTION
16	1	4-POINT TERMINAL BLOCK
15	3	CAPACITORS, 400 KVAR, 13200V, 150KV BIL, 1-BUSHING COOPER #CEP133M22 OR EQUAL 23
14	3	FUSE MOUNTING COOPER TYPE NX - CODE 6 W/50A X-LIMITER FUSE 23KV
13	1	INNER DOOR BARRIER - CLEAR LEXAN
12	LOT	#2 FLEXIBLE COPPER WIRE
11	11	INSULATOR 25KV, 125KV BIL
10	1	MANUFACTURERS NAMEPLATE
9	2	GROUNDING STRAPS
8	1	METER SOCKET 100 AMP, 4-TERMINAL, RNG TYPE
7	3	PARKING STAND
6	3	BUSHING WELL 200AMP, 25KV, 125KV BIL
5	1	1/4" CLEAR LEXAN WINDOW (REMOVABLE TO ACCESS FUSES)
4	1	POTENTIAL TRANSFORMER, SINGLE BUSHING, 120:1 1KVA - INTERNALLY FUSED 23
3	3	VACCUUM SWITCH, 200A, 25KV, 5-PIN CONTROL, MANUAL TRIP JOSLYN VERSAVAC 23
2	4	5/8-11 UNC THREADED INSERTS WITH REMOVABLE LIFTING TABS
1	2	HANDLE ASSY. W/ S.S. HEX BOLT, 3-PT. LATCHING

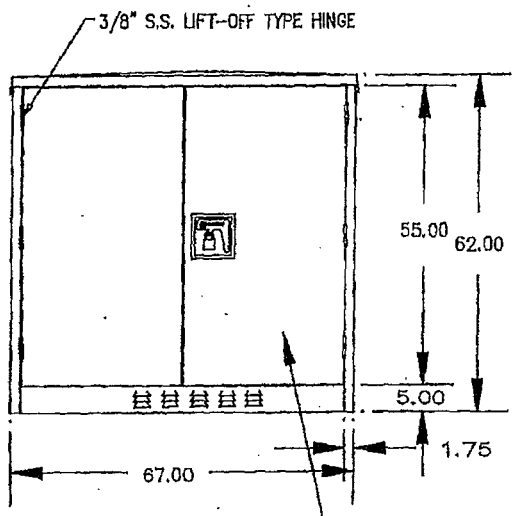

REAR VIEW

NOTES:

1. MATERIAL IS 12 GA. OR 11 GA. (.105) STEEL - AS SPECIFIED
2. STEEL IS PHOSPATE TREATED FOR PANT ADHESION
3. ENCLOSURE IS PAINTED WITH MALTON "POLYMAX PLUS" FINISHING PROCESS TO MEET ANSI/EEI PERFORMANCE GUIDLINES PAINT COLOR: MUNSELL 7GY3.29/1.5 GREEN.
4. ENCLOSURE CONSTRUCTION TO MEET THE LATEST ANSI STANDARD C57.12.28

REV	DATE	BY	DESCRIPTION
D	4/7/00	TG	ADDED [illegible]
C	3/11/99	TG	CHANGE FUSE SPACING DIM FROM 12 TO 13
B	12/03/97	RR	ADDED 4 1" X 2" SLOT TO HOLD DOWN CUP, REMOVED CLEAR LEXAN WINDOW FROM RIGHT VIEW A-A FOR CLARITY
A	11/21/97	RR	ADDED HOLD DOWN BRACKETS, RELOCATED LOWER BUSHINGS TO TOP FEED FUSE, ADDED DETAIL "A"

TOLERERANCE UNLESS NOTED	
.XX	±.02
.XXX	±.010

F P L

OH & UG DISTRIBUTION SYSTEM STANDARDS

ORIGINATOR: LFV

DRAWN BY: J. SHOUP

DATE: 07/26/01

APPROVED: J.J. MCEVOY
SUPERVISOR, OH/UG PRODUCT

NO SCALE

J

J-4.0.4	MALTON 25KV 200A, 125KV BIL, 1200KVAR PAD-MOUNTED CAPACITOR BANK	J-4.0.4

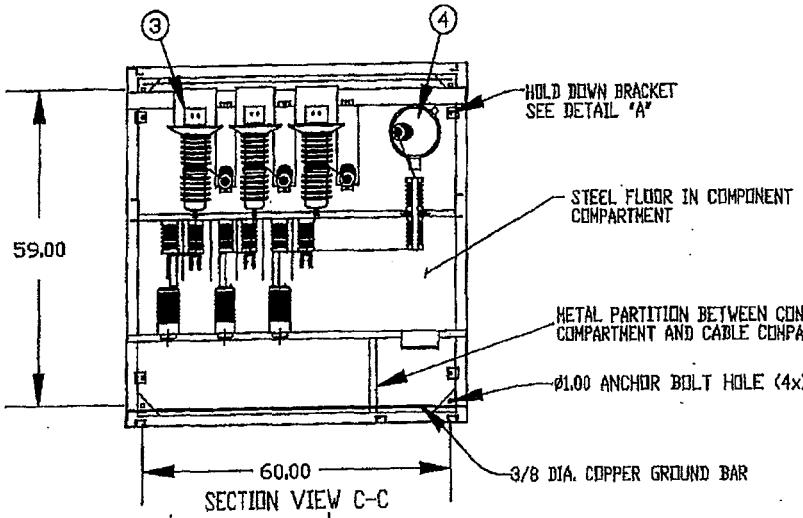

SECTION VIEW C-C

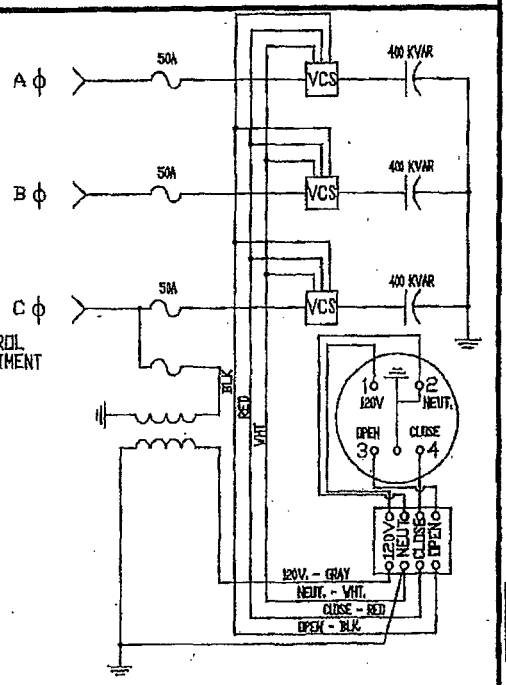

LINE DIAGRAM

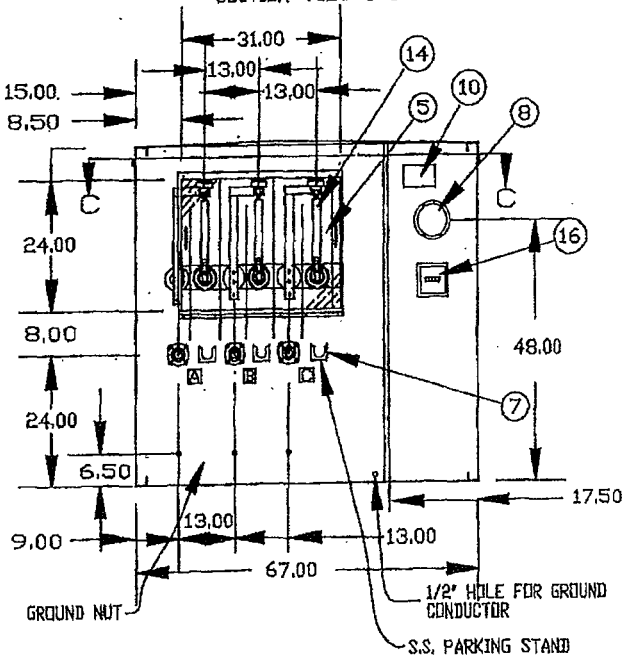

SECTION VIEW A-A

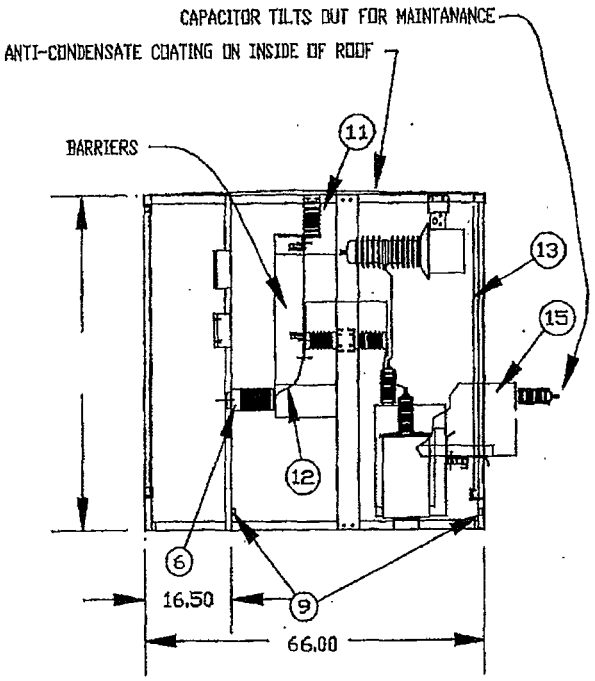

SECTION VIEW B-B

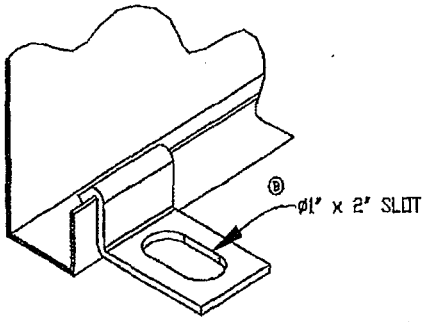

DETAIL "A"

FPL

OH & UG DISTRIBUTION SYSTEM STANDARDS

ORIGINATOR: LFV

DRAWN BY: J. SHOUP

DATE: 07/26/01

APPROVED: J.J. MCEVOY
SUPERVISOR, OH/UG PRODUCT

NO SCALE

J

J-4.0.5	MALTON 15KV, 200A, 95KV BIL, 1200KVAR PAD-MOUNTED CAPACITOR BANK	J-4.0.5

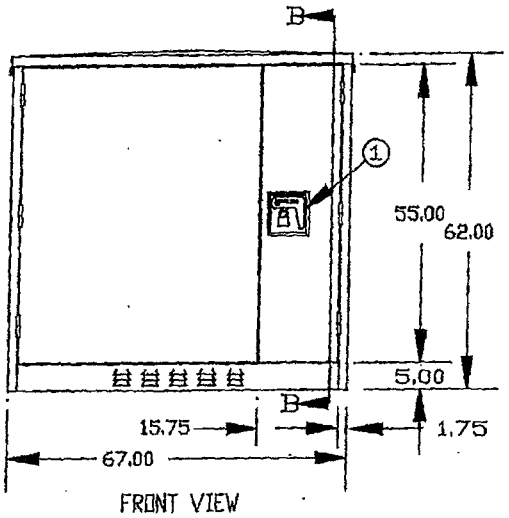

FRONT VIEW

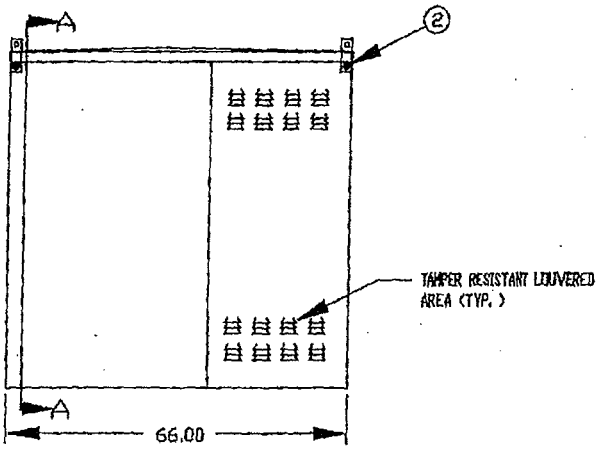

RIGHT SIDE VIEW

ITEM	QTY	DESCRIPTION
16	1	4-POINT TERMINAL BLOCK
15	3	CAPACITORS, 400 KVAR, 7620V, 95KV BIL, 1-BUSHING COOPER HCEP170B7FA OR EQUAL 15
14	3	FUSE MOUNTING COOPER TYPE NX - CODE 6 V/80A X-LIMITER FUSE 15KV
13	1	INNER DOOR BARRIER - CLEAR LEXAN
12	LOT	#2 FLEXIBLE COPPER WIRE
11	11	INSULATOR 25KV, 125KV BIL
10	1	MANUFACTURERS NAMEPLATE
9	2	GROUNDING STRAPS
8	1	METER SOCKET 100 AMP, 4-TERMINAL, RING TYPE
7	3	PARKING STAND
6	3	BUSHING WELL 200AMP, 25KV, 125KV BIL
5	1	1/4" CLEAR LEXAN WINDOW (REMOVABLE TO ACCESS FUSES)
4	1	POTENTIAL TRANSFORMER, SINGLE BUSHING, 63.5KV 1KVA - INTERNALLY FUSED 15
3	3	VACCUUM SWITCH, 200A, 15KV, 5-PIN CONTROL, MANUAL TRIP JOSLYN VERSAVAC 15
2	4	5/8-11 UNC THREADED INSERTS WITH REMOVABLE LIFTING TABS
1	2	HANDLE ASSY. W/ S.S. HEX BOLT, 3-PT. LATCHING

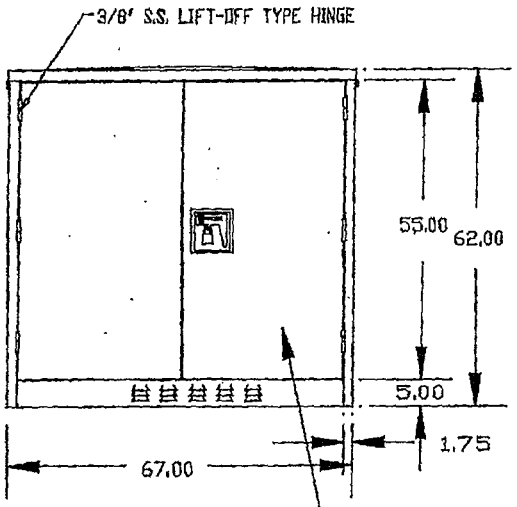

REAR VIEW

NOTES:

1. MATERIAL IS 12 GA. OR 11 GA. (.105) STEEL - AS SPECIFIED
2. STEEL IS PHOSPATE TREATED FOR PAINT ADHESION
3. ENCLOSURE IS PAINTED WITH MALTON "POLYMAX PLUS" FINISHING PROCESS TO MEET ANSI/EEI PERFORMANCE GUIDLINES PAINT COLOR: HUNSELL 7GY3.29/1.5 GREEN.
4. ENCLOSURE CONSTRUCTION TO MEET THE LATEST ANSI STANDARD C57.12.28

REV	DATE	BY	DESCRIPTION
A	04/05/00	TG	ADDED H & S #

TOLERERANCE UNLESS NOTED	
.XX	±.02
.XXX	±.010

F P L

OH & UG DISTRIBUTION SYSTEM STANDARDS

ORIGINATOR: LFV

DRAWN BY: J. SHOUP

DATE: 07/26/01

APPROVED: J.J. MCEVOY
SUPERVISOR, OH/UG PRODUCT SUPPORT SERVICES

NO SCALE

J-4.0.6	MALTON 15KV, 200A, 95KV BIL, 1200KVAR PAD-MOUNTED CAPACITOR BANK	J-4.0.6

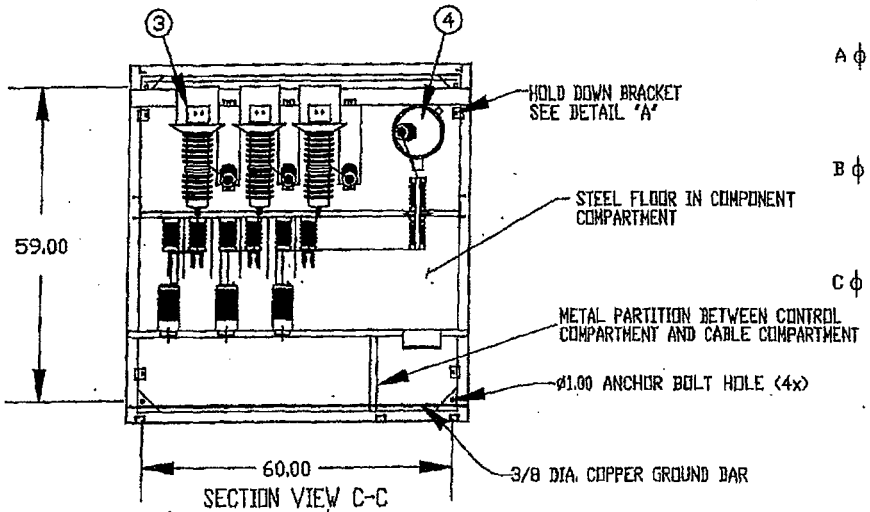

SECTION VIEW C-C

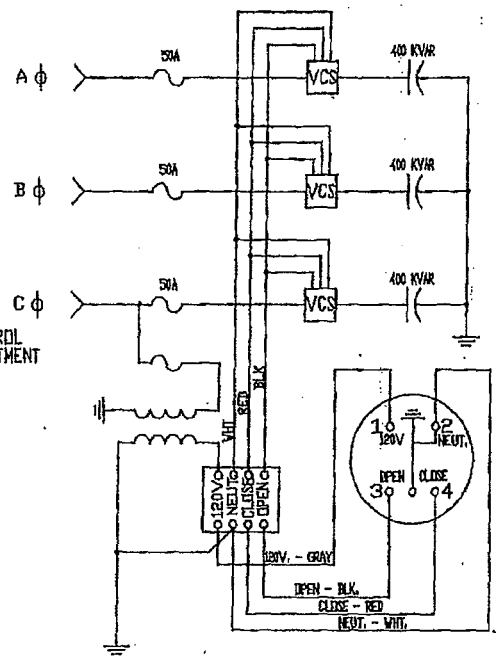

LINE DIAGRAM

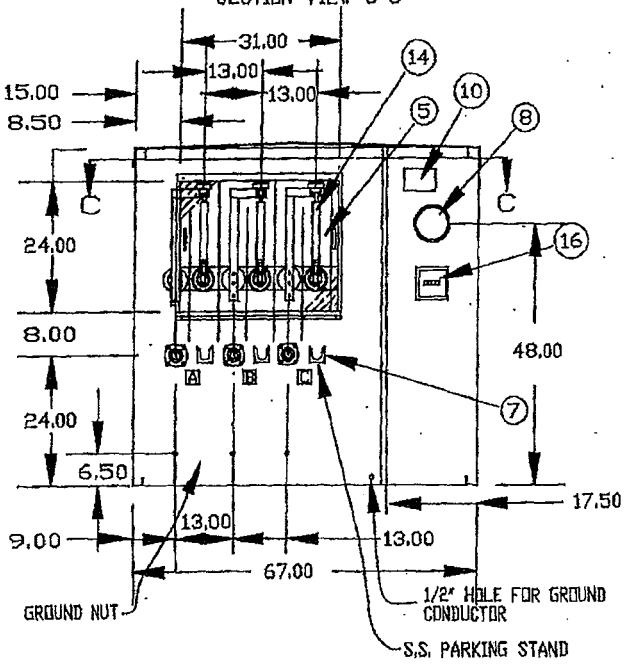

SECTION VIEW A-A

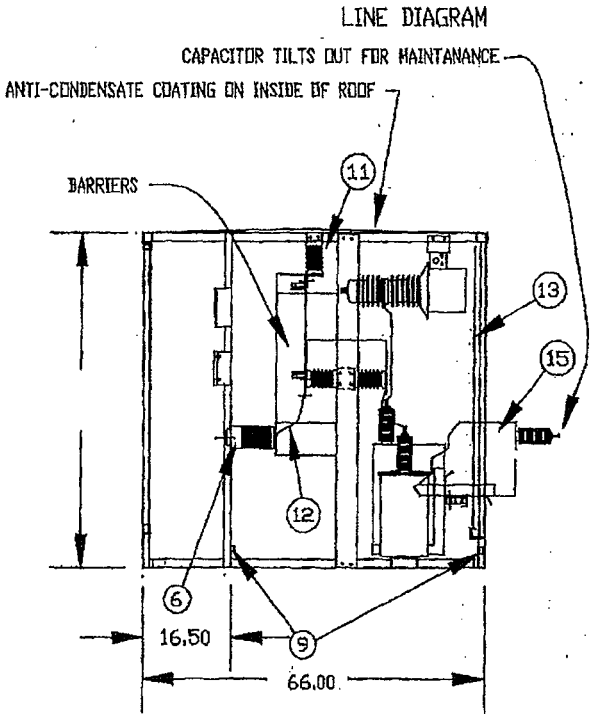

SECTION VIEW B-B

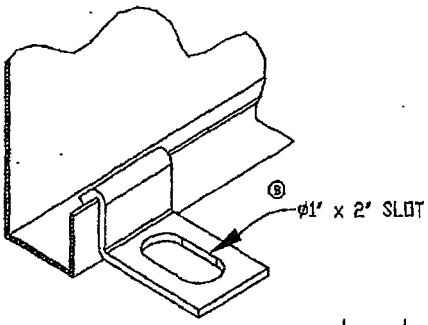

DETAIL 'A'

F P L

OH & UG DISTRIBUTION SYSTEM STANDARDS

ORIGINATOR: LFV

DRAWN BY: J. SHOUP

DATE: 07/26/01 APPROVED: J.J. MCEVOY
SUPERVISOR, OH/UG PRODUCT

NO SCALE

J-4.0.7	SHALLBETTER 25KV, 125KV BIL, 1200KVAR, DEAD-FRONT, PAD-MOUNTED, CAPACITOR BANK	J-4.0.7

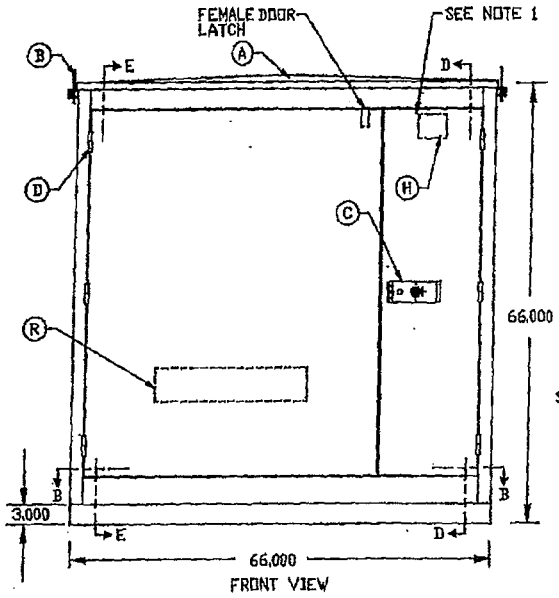

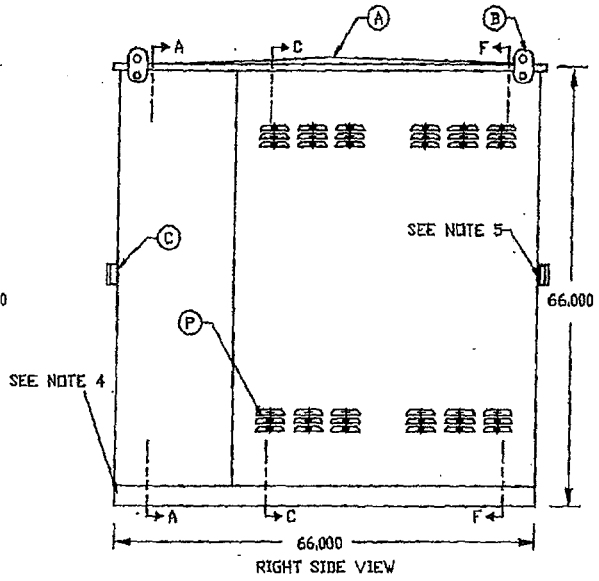

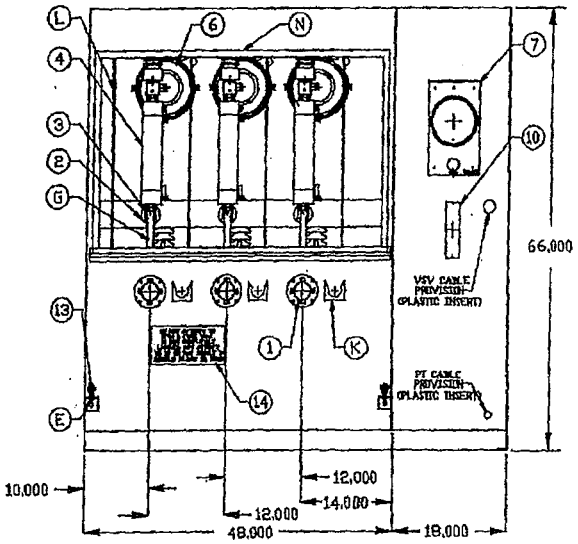

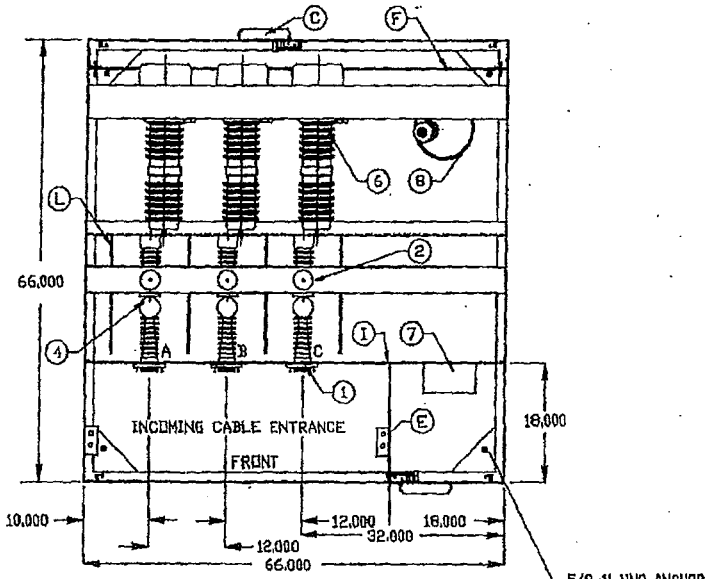

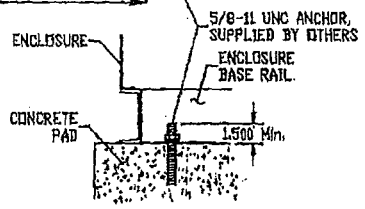

F P L

OH & UG DISTRIBUTION SYSTEM STANDARDS

ORIGINATOR: LFV

DRAWN BY: J. SHOUP

DATE: 07/26/01

APPROVED: J.J. MCEVOY
SUPERVISOR, OH/UG PRODUCT SUPPORT SERVICES

NO SCALE

J

J-4.0.8	SHALLBETTER, 25KV, 125KV BIL, 1200KVAR DEAD-FRONT, PAD-MOUNT, CAPACITOR BANK	J-4.0.8

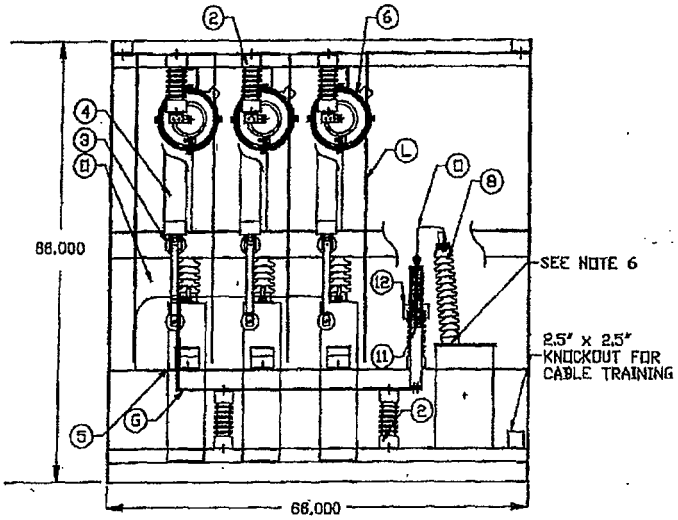

SECTION C--C

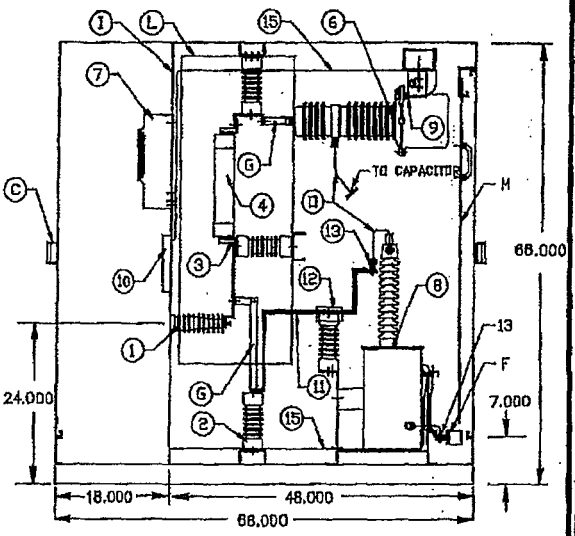

SECTION D--D

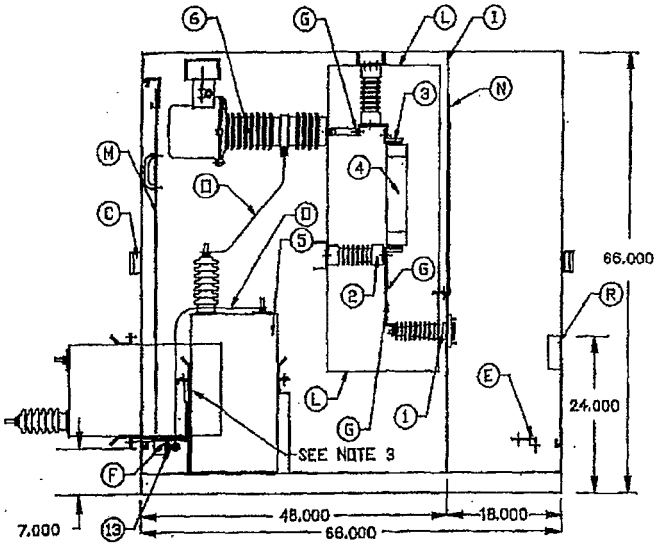

SECTION E--E

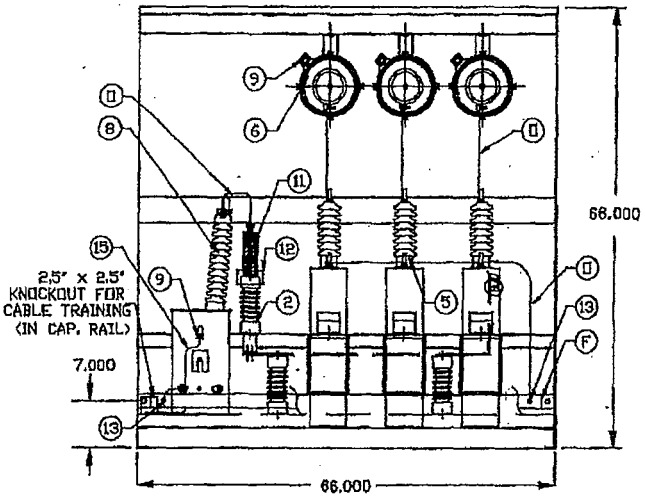

SECTION F--F

FPL

OH & UG DISTRIBUTION SYSTEM STANDARDS

ORIGINATOR: LFV

DRAWN BY: J. SHOUP

DATE: 07/26/01

APPROVED: J.J. MCEVOY
SUPERVISOR, OH/UG PRODUCT

NO SCALE

J

J-4.0.9	SHALLBETTER, 25KV, 125KV BIL, 1200KVAR, DEAD-FRONT, PAD-MOUNT, CAPACITOR BANK	J-4.0.9

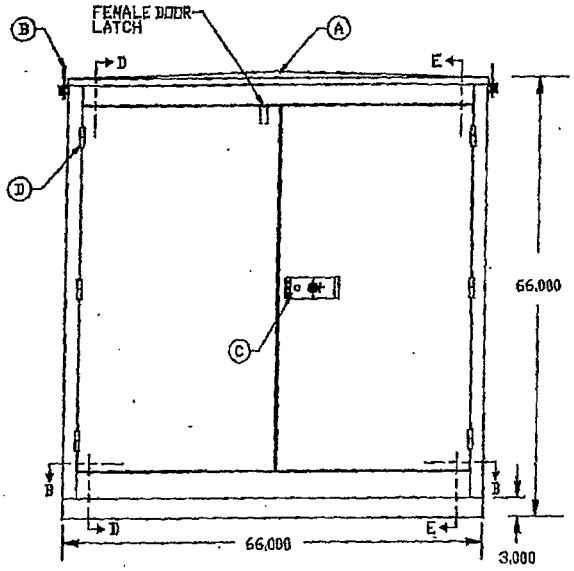

REAR VIEW

SYSTEM RATING

NOMINAL SYSTEM VOLTAGE	23/13.28 kV GROUNDED WYE
MAXIMUM DESIGN VOLTAGE	25 kV
BASIC INSULATION LEVEL (BIL)	125 kV
CONTINUOUS CURRENT	200 AMP
FUSE TYPE	NX CURRENT-LIMITING
FUSE RATING, MAXIMUM	200E AMP
FUSE INTERRUPTING, SYMMETRICAL	9,400 AMP
kVAR	1200
PHASE	THREE
HERTZ	60 HZ.
WEIGHT	2,150 Lbs.
CATALOG NUMBER	SCBD-P332612000SW-GA-FPL

CONSTRUCTION NOTES

- NEMA TYPE 3R, 11 GAUGE GALVANNEAL, WELDED CONSTRUCTION, WELDS AND SEAMS GROUND SMOOTH.
- FINISH COAT IS MUNSELL No. 7GY 3.29/1.5, GREEN. PAINT FINISH MEETS OR EXCEEDS A.N.S.I. C57.12.28-1988 PAINT SPECIFICATIONS FOR PAD-MOUNT EQUIPMENT ENCLOSURE INTEGRITY.
- ENCLOSURE TO HAVE A 3", 304L STAINLESS STEEL FORMED CHANNEL BASE.

FEATURES

A CROSS KINKED ROOF FOR ADDED STRENGTH AND PREVENTING STANDING MOISTURE.

B REMOVABLE LIFTING PLATES WITH BLIND MOUNTING HOLES.

C SBI'S 'SENTRY LATCH' 3-POINT POSITIVE LATCH MECHANISM, SECURED AND OPERATED BY 1/2-TURN, CAPTIVE, RECESSED HEX-HEAD BOLT AND SHIELDED PADLOCK SHACKLE.

D HINGE, LOOSE JOINT PIN, 304L STAINLESS STEEL, SOLID WELDED TO DOOR AND CABINET, ALLOWS DOORS TO BE REMOVED IN THE OPEN POSITION ONLY.

E FRONT GROUND PADS, 304L STAINLESS STEEL, WITH 1/2"-13 UNC THREADED HOLE FOR CUSTOMER SUPPLIED GROUND CONNECTORS. PADS ARE UNPAINTED AND WELDED TO ENCLOSURE.

F REAR GROUND BUS, FULL LENGTH, CONTINUOUS, SILVER PLATED COPPER. SUPPORTED WITH UNPAINTED, STAINLESS STEEL GROUND PADS WELDED TO ENCLOSURE.

G BUS BAR, SILVER PLATED COPPER, FREE OF SHARP EDGES OR BURRS.

H MANUFACTURE'S DATA PLATE. CONTAINS INFORMATION LISTED UNDER SYSTEM RATING, NON-CORROSIVE, PERMANENTLY STAMPED AND ATTACHED TO ENCLOSURE.

I EQUIPMENT WALL. FULL HEIGHT.

J DOOR STAYS (RETAINED) HOLD DOORS IN 90°, 110°, OR 140° OPEN POSITION.

K PARKING STANDS. 14 GAUGE 304L STAINLESS STEEL, WELDED TO EQUIPMENT WALL.

L BARRIERS. 3/16" GPO-3, GLASS REINFORCED POLYESTER.

M COMPARTMENT BARRIER. 1/4" LEXAN, CLEAR POLYCARBONATE, REMOVABLE, WITH NON-CONDUCTIVE HANDLES.

N EUSE ACCESS BARRIER. 1/4" CLEAR POLYCARBONATE (LEXAN), SECURED WITH 3/4 TURN FASTENERS.

O COPPER ROD, HARDDRAWN 3/8" DIA.

P SCREENED, TAMPER PROOF LOUVERS.

R SPARE FUSE POCKET

SPECIAL NOTES FOR MANUFACTURER ONLY:

1. NO SIGNS OR LABELS TO BE ON ANY EXTERIOR PART OR INTERIOR DOORS OF ENCLOSURE, PER FP&L SPEC. (SBI DATA PLATE WILL BE ON INTERIOR OF FRONT MALE DOOR).
2. NO HIGH VOLTAGE CABLE TO BE USED ON ANY PART OF THIS GEAR. ALL HV ELECTRICAL CONNECTIONS TO BE MADE WITH HARDDRAWN BUS OR ROD.
3. THIS ENCLOSURE UTILIZES A TILT-OUT CAPACITOR RACK. CAPACITORS TO BE ABLE TO INDIVIDUALLY TILTED OUT AT 90°.
4. ENCLOSURE BOTTOM CHANNEL TO BE A 3" FORMED 304L STAINLESS STEEL CHANNEL.
5. DOOR LATCH HAS A HEX HEAD BOLT.
6. POTENTIAL TRANSFORMER IS INTERNALLY FUSED.
7. THESE NOTES ARE FOR MANUFACTURER ONLY.

J

FPL

OH & UG DISTRIBUTION SYSTEM STANDARDS

ORIGINATOR: LFV DRAWN BY: J. SHOUP

DATE: 07/26/01 APPROVED: J.J. MCEVOY NO SCALE

SUPERVISOR, OH/UG PRODUCT STANDARDS

J-4.0.10	SHALLBETTER 25 KV, 1200 KVAR PAD-MOUNTED CAPACITOR BANK	J-4.0.10

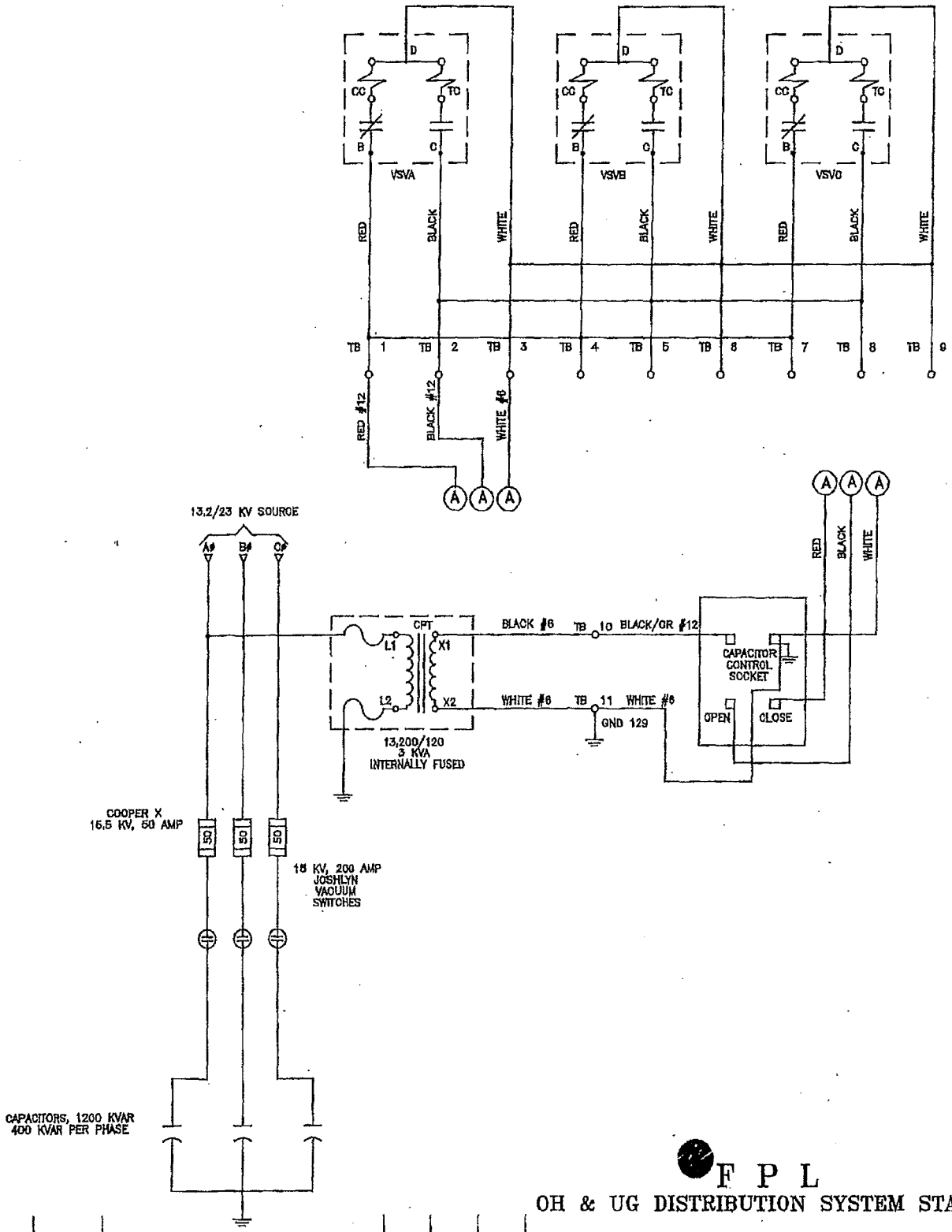

J

FPL

OH & UG DISTRIBUTION SYSTEM STANDARDS

ORIGINATOR: LFV

DRAWN BY: J. SHOUP

DATE: 07/26/01

APPROVED: J.J. MCEVOY
SUPERVISOR, OH/UG PRODUCT

NO SCALE

C-46.0.0	TYPICAL INSTALLATION OF 25KV S&C VISTA THREE PHASE SWITCH FOR USE IN 13KV OR 23KV BELOW GRADE AND PAD MOUNTED APPLICATIONS	C-46.0.0

TYPICAL BUSHING POSITION ON VISTA SWITCH MODEL 422 SHOWN
F=FEEDER L=LATERAL

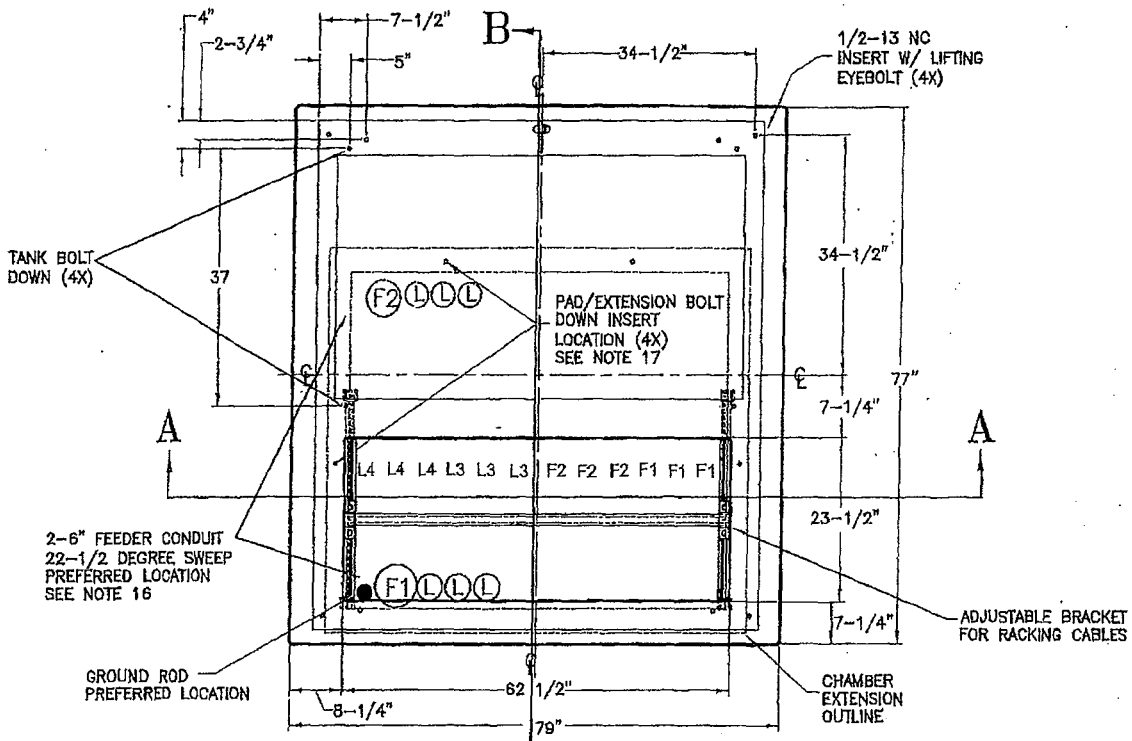

TOP VIEW OF PAD AND CHAMBER

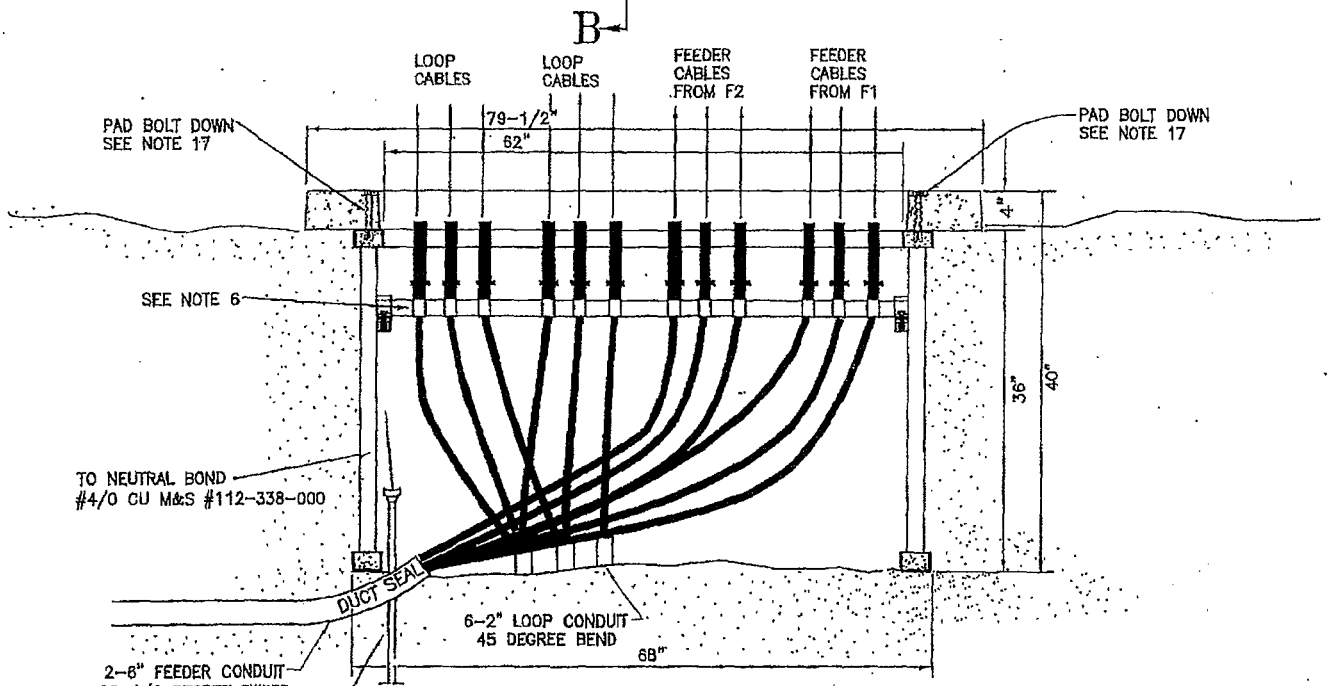

SECTION A-A: FRONT VIEW OF PAD AND CHAMBER
CABLE TERMINATIONS SWITCH SIDE

F P L

OH & UG DISTRIBUTION SYSTEM STANDARDS

ORIGINATOR: A. PANTOURIS DRAWN BY: E. SCHILLING

C-46.0.1	TYPICAL INSTALLATION OF 25KV S&C VISTA THREE PHASE SWITCH FOR USE IN 13KV OR 23KV BELOW GRADE AND PAD MOUNTED APPLICATIONS	C-46.0.1

TYPICAL VISTA SWITCH MODEL 422 SHOWN

TOP VIEW OPERATION SIDE

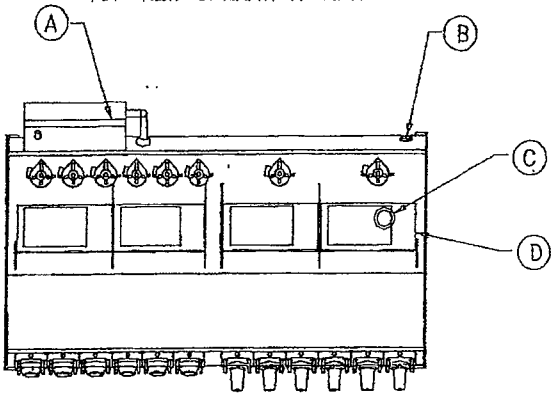

TOP VIEW TERMINATION SIDE

FEATURES IN THIS ASSEMBLY

A. OVERCURRENT CONTROL
B. GAS FILL PORT
C. PRESSURE GAUGE
D. WINDOW FOR VIEWING OPEN GAP AND GROUNDED POSITION OF LOAD-INTERRUPTER SWITCH OR FAULT INTERRUPTER
E. 200-AMPERE BUSHING-WELLS FOR FAULT-INTERRUPTER
F. 600-AMPERE BUSHINGS FOR LOAD-INTERRUPTER SWITCH
G. TWO-HOLE GROUND PAD
H. 600-AMPERE THREE-POLE LOAD-INTERRUPTER SWITCH WITH GROUND POSITION
I. OPERATING MECHANISM
J. MANUAL OPERATING HANDLE
K. NAMEPLATE
L. SUBMERSIBLE SF6-INSULATED TANK
M. 600-AMPERE ALUMINUM BUS
N. BASE BRACKET

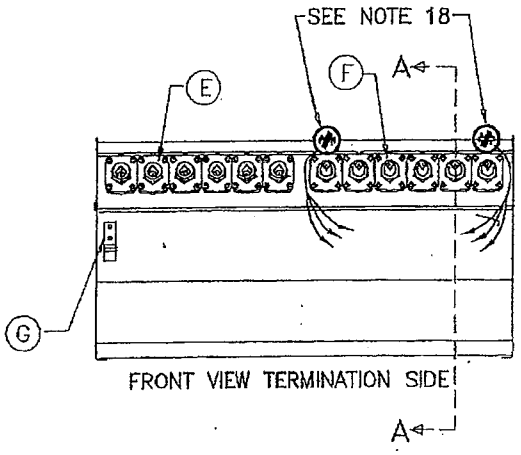

FRONT VIEW TERMINATION SIDE

TERMINATION SIDE

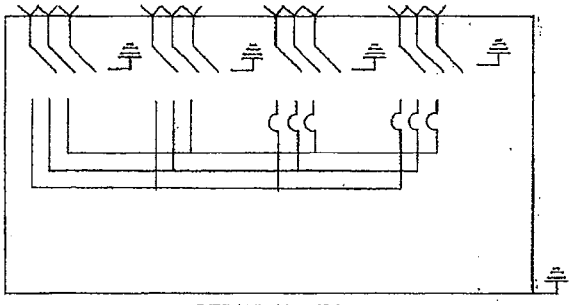

OPERATION SIDE

CONNECTION DIAGRAM

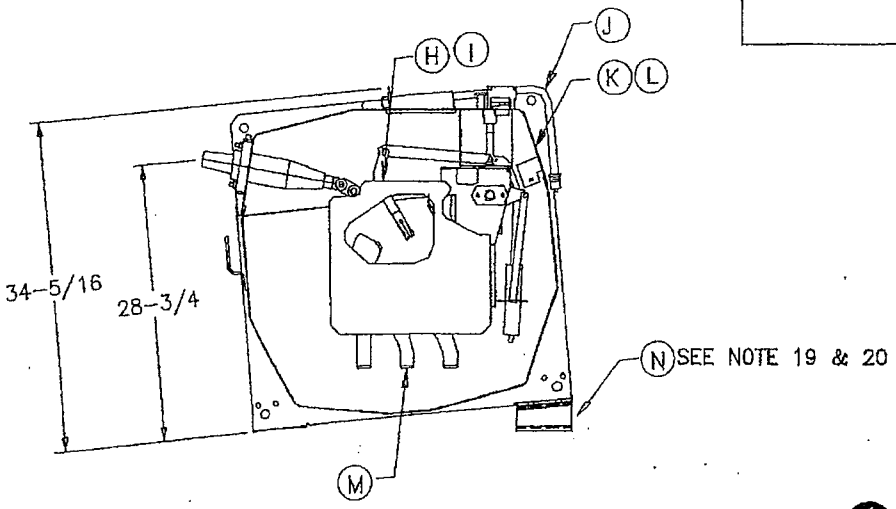

SECTION A-A: FEEDER SWITCH

F P L

OH & UG DISTRIBUTION SYSTEM STANDARDS

ORIGINATOR: A. PANTOURIS DRAWN BY: E. SCHILLING

C-46.0.2	TYPICAL INSTALLATION OF 25KV S&C VISTA THREE PHASE SWITCH FOR USE IN 13KV OR 23KV BELOW GRADE AND PAD MOUNTED APPLICATIONS	C-46.0.2

TYPICAL BUSHING POSITION ON VISTA SWITCH MODEL 431 SHOWN
F=FEEDER L=LATERAL

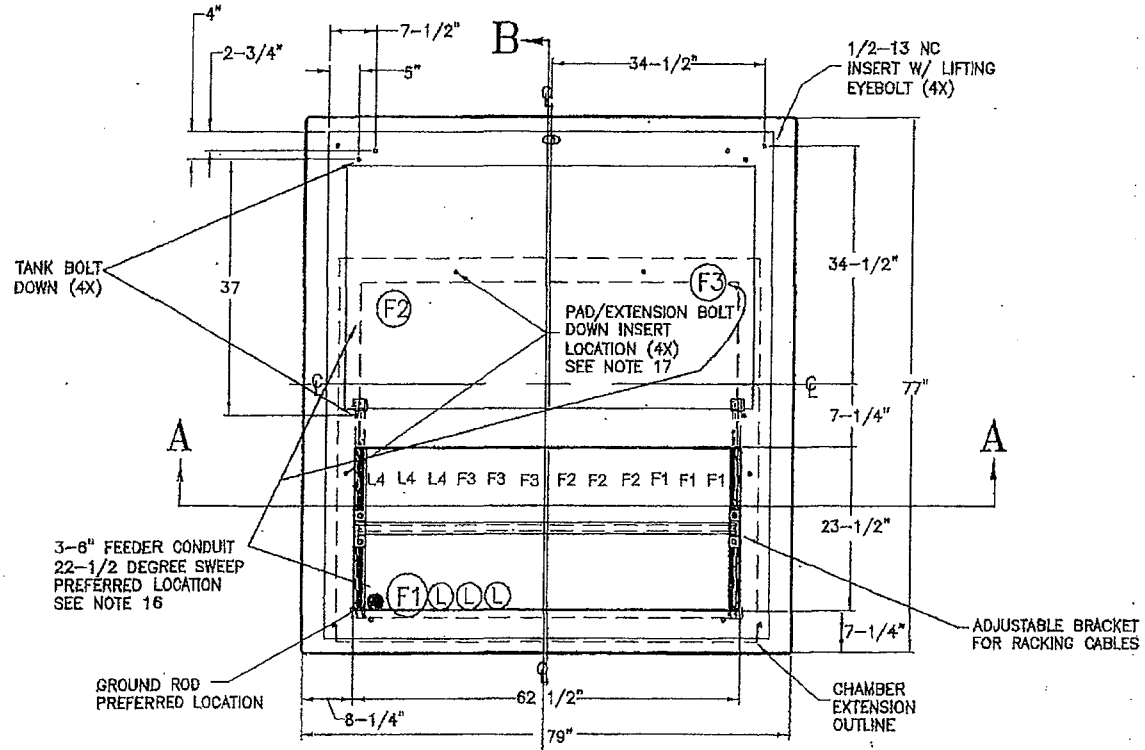

TOP VIEW OF PAD AND CHAMBER

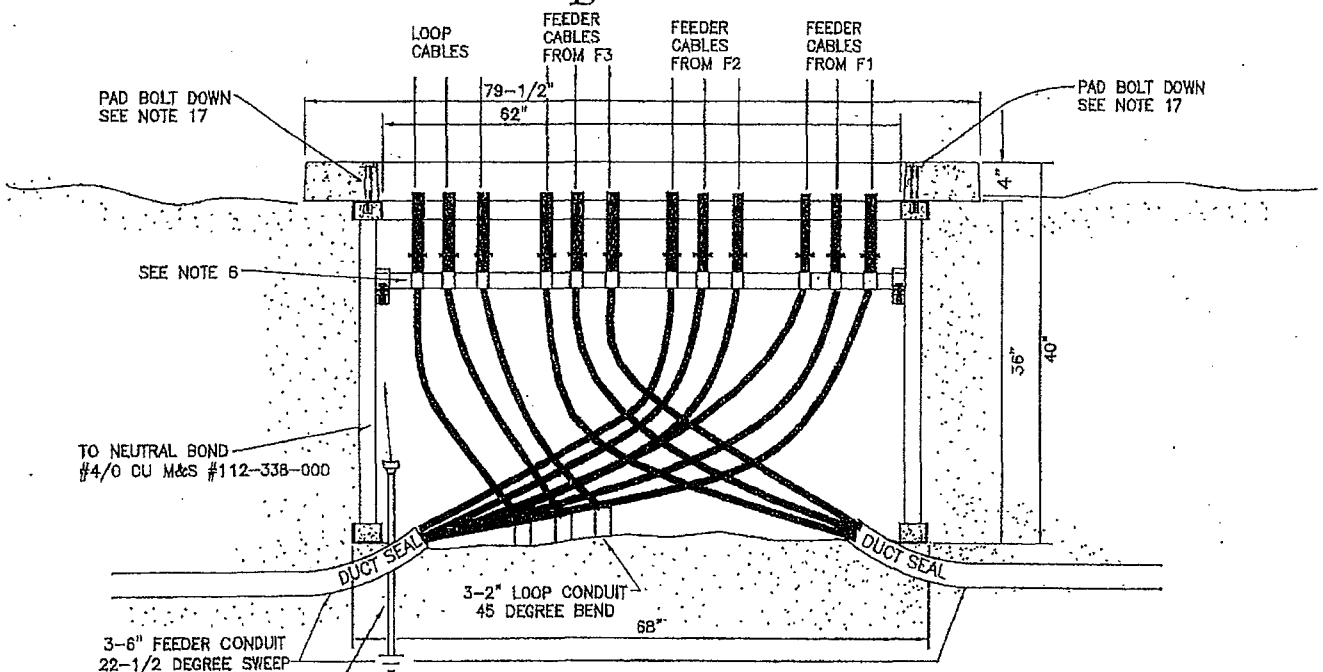

SECTION A-A: FRONT VIEW OF PAD AND CHAMBER
CABLE TERMINATIONS SWITCH SIDE

FPL

OH & UG DISTRIBUTION SYSTEM STANDARDS

ORIGINATOR: J. VALDES DRAWN BY: E. SCHILLING

C-46.0.3	TYPICAL INSTALLATION OF 25KV S&C VISTA THREE PHASE SWITCH FOR USE IN 13KV OR 23KV BELOW GRADE AND PAD MOUNTED APPLICATIONS	C-46.0.3

C

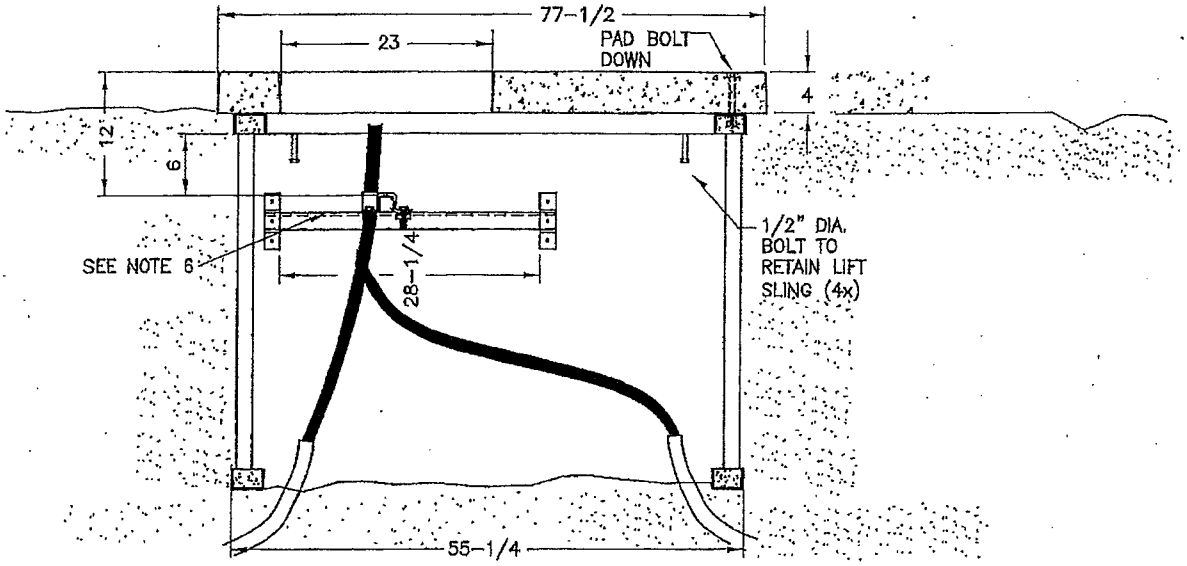

SECTION B-B: SIDE VIEW OF PAD AND CHAMBER

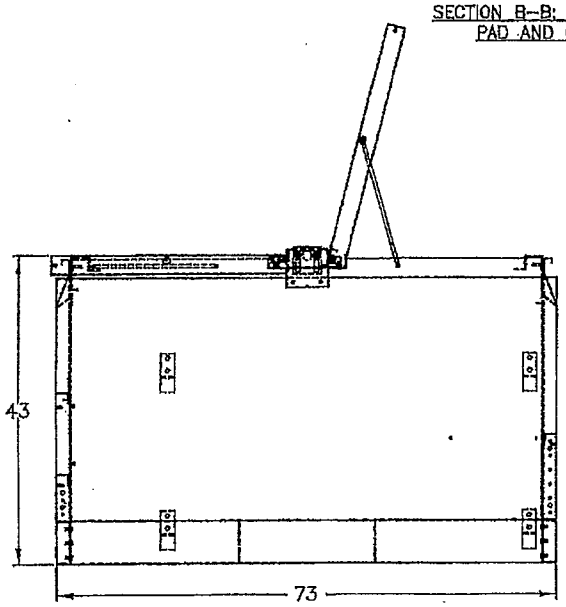

SWITCH ENCLOSURE SIDE VIEW

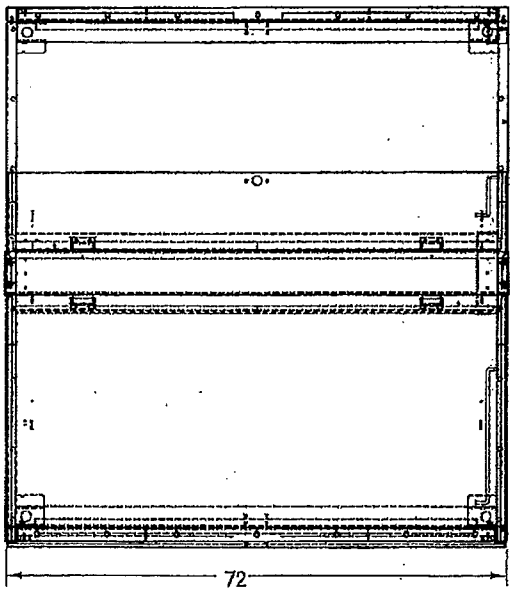

SWITCH ENCLOSURE TOP VIEW

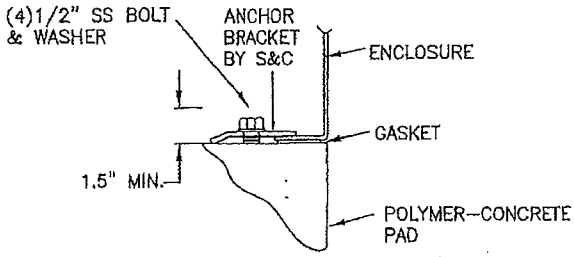

ENCLOSURE ANCHOR DETAIL

F P L

OH & UG DISTRIBUTION SYSTEM STANDARDS

ORIGINATOR: A. PANTOURIS DRAWN BY: E. SCHILLING

☐ INACCESSIBLE ☒ 13KV ☐ FUTURE 23KV ☐ 23KV ☐ SALT SPRAY ☐ AVIAN AREA

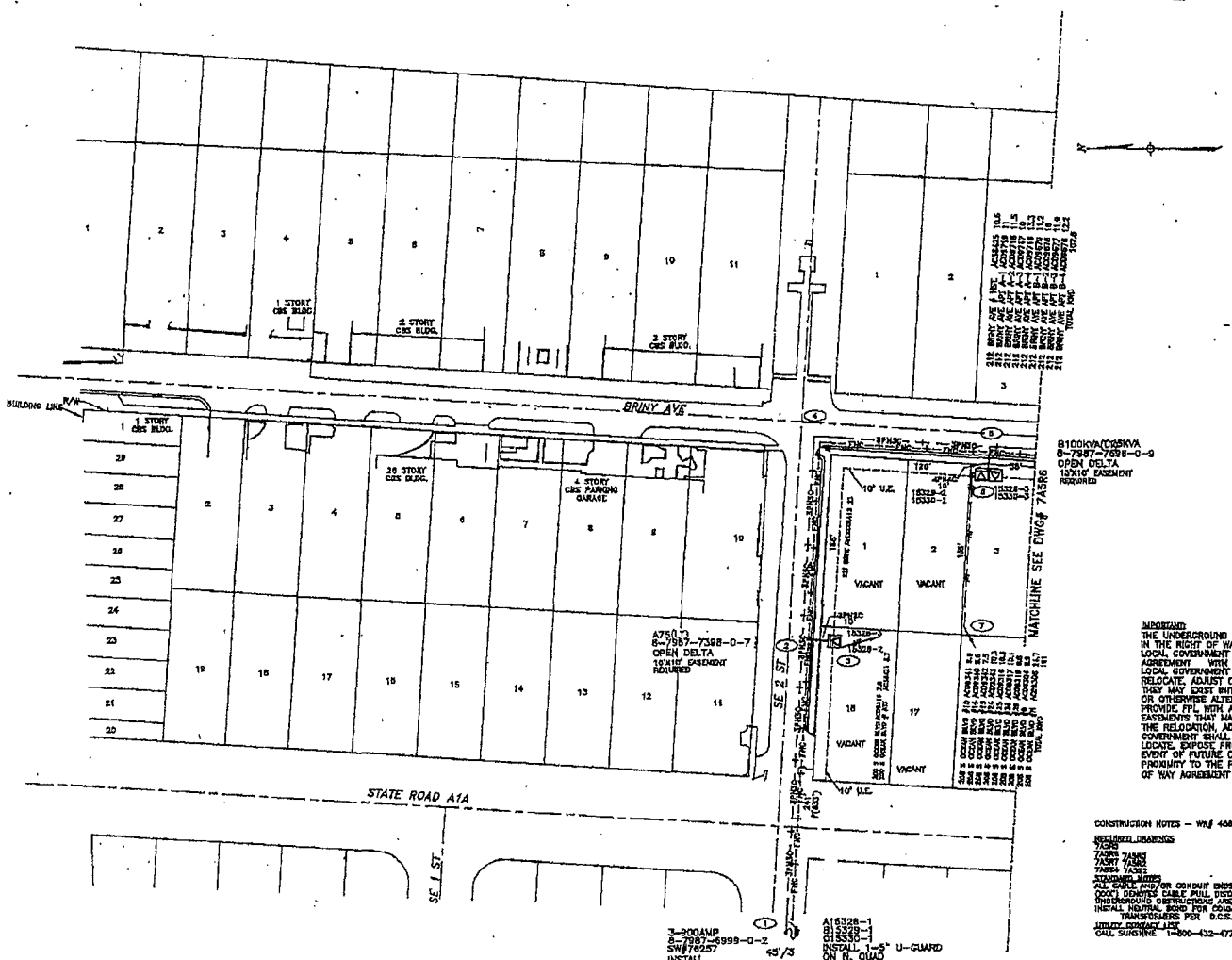

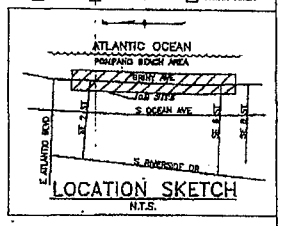

LOCATION SKETCH
N.T.S.

The location and existence of any facilities may not be relied upon by the supplier in responding to a bid or in complying with any contract. Supplier is responsible for evaluating site conditions both above and below ground including underground facility locations.

Ground Rod Information		
Location	Feet of Ground Rod installed	Resistance (Ohms)

ATTENTION
ROW AGREEMENT

IMPORTANT
THE UNDERGROUND FACILITIES AND ASSOCIATED EQUIPMENT ARE IN THE RIGHT OF WAY DUE TO SPECIAL REQUEST BY THE LOCAL GOVERNMENT AGENCY AND ARE COVERED BY SPECIAL AGREEMENT WITH THE LOCAL GOVERNMENT. SHOULD THE LOCAL GOVERNMENT OR OTHER RIGHT OF WAY REQUIRE FPL TO RELOCATE, ADJUST OR REARRANGE ANY OF THESE FACILITIES, AS THEY MAY EXIST INITIALLY OR LATER BE MODIFIED, UPGRADED, OR OTHERWISE ALTERED, THE LOCAL GOVERNMENT SHALL PROVIDE FPL WITH A SUBSTITUTE LOCATION, INCLUDING ANY EASEMENTS THAT MAY BE NECESSARY, AND PAY ANY COSTS FOR THE RELOCATION, ADJUSTMENT, OR REARRANGEMENT. THE LOCAL GOVERNMENT SHALL ALSO REIMBURSE FPL FOR ANY COSTS TO LOCATE, EXPOSE, PROTECT OR SUPPORT THE FACILITIES. IN THE EVENT OF FUTURE CONSTRUCTION OR EXCAVATION IN CLOSE PROXIMITY TO THE FACILITIES, REQUEST A COPY OF THE RIGHT OF WAY AGREEMENT FROM DOC FILES/GO FOR FURTHER DETAILS.

CONSTRUCTION NOTES — WR# 4860334

REQUIRED DRAWINGS
7A5R5
7A5R6 7A5R7
7A5R7 7A5R8
7A5R4 7A5R2

STANDARD NOTES
ALL CABLE AND/OR CONDUIT ENDS ARE TO BE MARKED WITH AN ELECTRONIC MARKER (DOCT DENOTES CABLE PULL DISTANCE
UNDERGROUND OBSTRUCTIONS ARE TO BE LOCATED PRIOR TO DIGGING
INSTALL NEUTRAL BOND FOR COMMUNICATION COMPANIES AT ALL SINGLE PHASE TRANSFORMERS PER D.C.S., C-11.010

UTILITY CONTACT LIST
CALL SUNSHINE 1-800-432-4770

REFERENCE DWG's

7A5R6
7A5S4

	4860334	1	08/10/15	PULL PRI/FDR CBLS, INST VISTA CABINETS, INSTALL PADS, & PMTX'S
ASSIMILT	AUTH NO.	NO.	DATE	REVISION

AS-BUILT COPY | AS-BUILT CREW PRINT
Job CERTIFIED COMPLETED as shown on this AS-BUILT print. Material changes shown on ROS.
Supervisor's Signature — Date
All required ground rods have been driven & verified to be within FPL standards. Values are shown at all locations.
Foreman's Signature — Date

Easement? YES ☐ NO ☐ | Survey/Stake? YES ☐ NO ☐ | Work with SA/OT YES ☐ NO ☐
Tree Work? YES ☐ NO ☐ | Designer/Staker? YES ☐ NO ☐ | CT/Special Mtrl YES ☐ NO ☐
Map Posting? YES ☒ NO ☐ | Trench Feet | Duct Bank Feet
Posted by | Telephone Request? YES ☐ NO ☐ | CATV Request? YES ☐ NO ☐

FINAL	CITY	DR. DIST.	COUNTY AIR	STATE RD	FAA
	VAID	NR XING	COUNTY RD.	TRANSM.	

FPL

DESIGNED BY: L. VAZQUEZ
DRAWN BY: J. TORRICO/M.R.
DATE: 8/10/15
MAP NO.: G-0342
0 20 40 80 FEET

W/A: NB
BRINY AVE CONVERSION
BRINY AVE BTWN. SE 2 ST & SE 8 ST
POMPANO BEACH / BROWARD COUNTY, FL
DWG NO. 7A5R5
WR 4860334 WR D048-60-334

PLOT DATE: 8/10/2015 PLOT TIME: 16:08:53 AM CAD NAME: 1001

☐ INACCESSIBLE ☒ 13KV ☐ FUTURE 23KV ☐ 23KV ☐ SALT SPRAY ☐ AVIAN AREA

P.M. VISTA DISC. SW# 1			
GRID# 8-7987-7690-5-3			
COMPARTMENT 1	COMPARTMENT 2	COMPARTMENT 3	COMPARTMENT 4
SW.#76260	SW.#76259	SW# 75258	A15328-6
8-7987-7690-1-3	8-7987-7690-2-1	8-7987-7690-3-0	B15329-5
SOUTH TO VISTA CAB. 2	TO FEEDER	NORTH TO POTHEAD	C15330-5
COMP. 2	704464	POLE	FUSE 39 @ 80"E"
SW.#76261	SW.#	SW# 76267	8-7987-7690-4-6

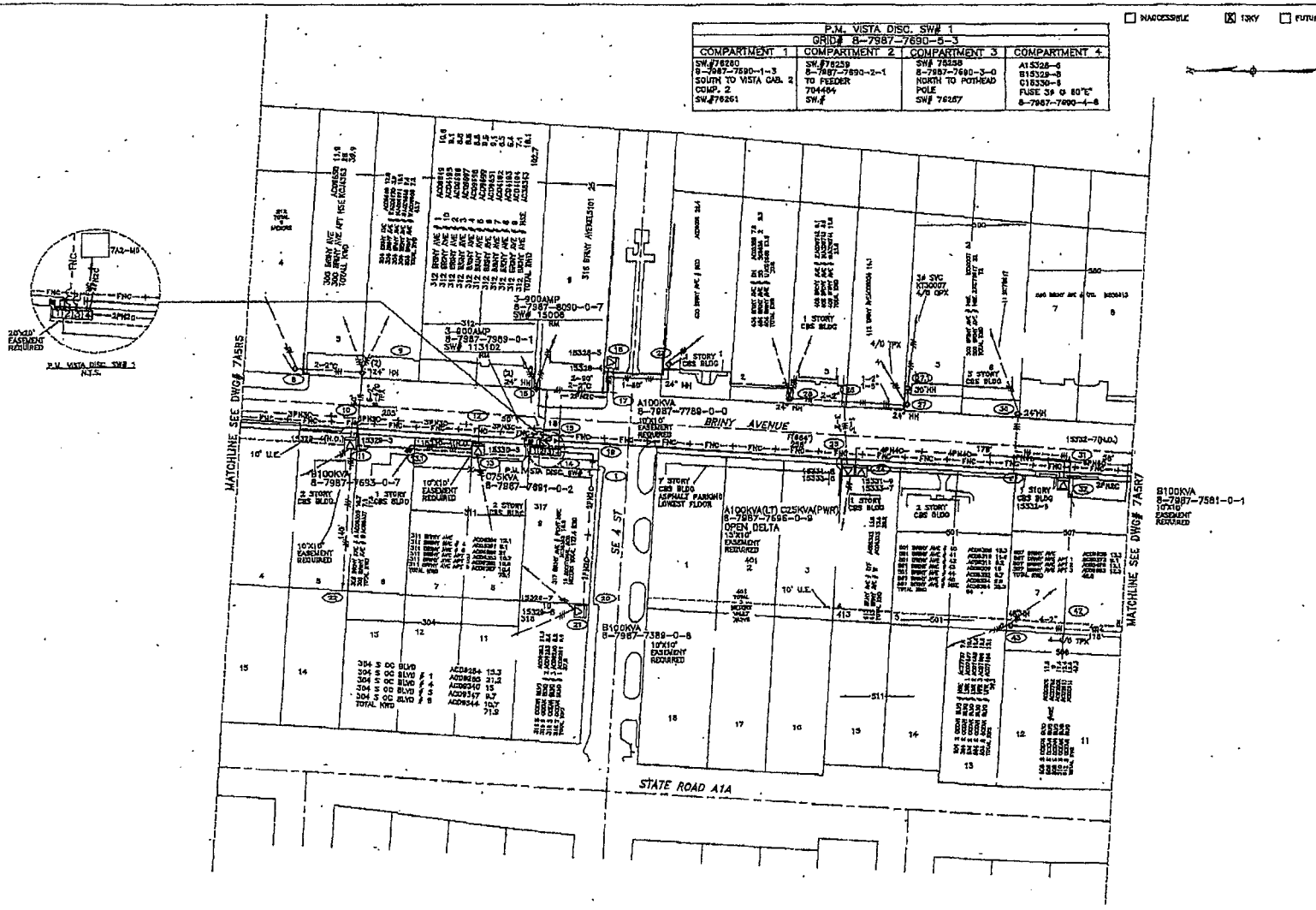

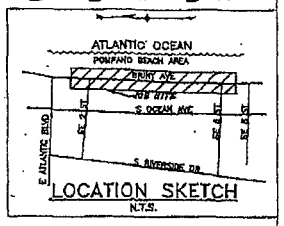

This location and existence of any facilities may not be relied upon by the supplier in responding to a bid or in complying with any contract. Supplier is responsible for evaluating site conditions both above and below ground including underground facility locations.

Ground Rod Information		
Location	Feet of Ground Rod Installed	Resistance (Ohms)

ATTENTION

ROW AGREEMENT

IMPORTANT:
THE UNDERGROUND FACILITIES AND ASSOCIATED EQUIPMENT ARE IN THE RIGHT OF WAY DUE TO SPECIAL REQUEST BY THE LOCAL GOVERNMENT AGENCY AND ARE CONTROLLED BY SPECIAL AGREEMENT WITH THE LOCAL GOVERNMENT. SHOULD THE LOCAL GOVERNMENT OR OTHER RIGHT OF WAY INSURE FPL TO RELOCATE, ADJUST OR REARRANGE ANY OF THESE FACILITIES, AS THEY MAY EXIST INITIALLY OR LATER BE MODIFIED, UPGRADED, OR OTHERWISE ALTERED, THE LOCAL GOVERNMENT SHALL PROVIDE FPL WITH A SUBSTITUTE LOCATION, INCLUDED ANY EASEMENTS THAT MAY BE NECESSARY, AND PAY ANY COSTS FOR THE RELOCATION, ADJUSTMENT OR REARRANGEMENT. THE LOCAL GOVERNMENT SHALL ALSO REIMBURSE FPL FOR ANY COSTS TO LOCATE, EXPOSE, PROTECT OR SUPPORT THE FACILITIES. IN THE EVENT OF FUTURE CONSTRUCTION OR EXCAVATION IN CLOSE PROXIMITY TO THE FACILITIES, REQUEST A COPY OF THE RIGHT OF WAY AGREEMENT FROM DOC FILES/GIS FOR FURTHER DETAILS.

CONSTRUCTION NOTES — WR# 4860334

REQUIRED DRAWINGS
7A5R5(NOTES)
7A5R5 7A5R2
7A5R7 7A5R3
7A5S4 7A5S2

UTILITY CONTACT LIST
CALL SUNSHINE 1-800-432-4770

REFERENCE DWG's

7A5R5
7A5R7
7A5S4

AS-BUILT COPY | AS-BUILT CREW PRINT

Job CERTIFIED COMPLETED as shown on this AS-BUILT print. Material changes shown on RUSH.

All approved ground rods have been added & verified to be within FPL standards. Values are shown at all locations.

Easement? YES ☐ NO ☐ | Tree Work? YES ☐ NO ☐ | MGD Footing? YES ☒ NO ☐

Survey/Staked? YES ☐ NO ☐ | Deshpour/Staked? YES ☐ NO ☐ | Work With SMOT YES ☐ NO ☐ | CT/Special Mkt YES ☐ NO ☐

Trench Feet | Duct Bank Feet

	CITY	DR. DIST.	COUNTY AIR	STATE RD	FAA
	RR XING		COUNTY RDL	TRANSYL	

Posted by | Telephone Request? YES ☐ NO ☐ | CATV Request? YES ☐ NO ☐

FPL

DESIGNED BY	I. VAZQUEZ
DRAWN BY	J. TORRES/M.R.
DATE	6/10/15
MAP NO.	Q-0342

0 20 40 80 FEET

TWP. 48 RNG 42 SEC 26 DIV.

N/A NS

BRINY AVE CONVERSION

BRINY AVE BTWN SE 2 ST & SE 8 ST
POMPANO BEACH / BROWARD COUNTY, FL

DWG NO. 7A5R6

WR# 4860334 WR# D048-60-334

ASBUILT	AUTH NO.	NO.	DATE	REVISION
	4860334	0	06/10/15	PULL PM/FOR CBLS, INST VISTA CABINETS, INSTALL PADS, & PMT'K'S

PLOT DATE: 6/29/2016 PLOT TIME: 8:16:14 AM CAD NAME: 003

☐ INACCESSIBLE ☒ 13KV ☐ FUTURE, 23KV ☐ 23KV ☐ SALT SPRAY ☐ AVIAN AREA

P.M. VISTA DISC. SW# 2			
GRID# 8-7987-7571-5-0			
COMPARTMENT 1	COMPARTMENT 2	COMPARTMENT 3	COMPARTMENT 4
SW.#76262 8-7987-7571-1-2 WEST TO VISTA CAB. #3 COMP. 2 SW.#76263	SW.#76261 8-7987-7571-2-1 NORTH TO VISTA CAB #1 COMP. 1 SW.#76260	A B C FUSE "E" 8-7987-7571-3-9	A15331-1 B15332-1 C15333-1 FUSE 3# @ 50"E" 8-7987-7571-4-7

P.M. VISTA DISC. SW# 3			
GRID# 8-7987-7071-5-1			
COMPARTMENT 1	COMPARTMENT 2	COMPARTMENT 3	COMPARTMENT 4
SW.#76264 8-7987-7071-1-5 EAST TO PMDS# 1 COMP. 1 SW.#72329	SW.#76263 8-7987-7071-2-3 EAST TO VISTA CAB. #2 COMP. 1 SW.#76262	A B C FUSE "E" 8-7987-7071-3-1	A15331-12 B15332-12 C15333-12 FUSE 3# @ 80"E" 8-7987-7071-4-0

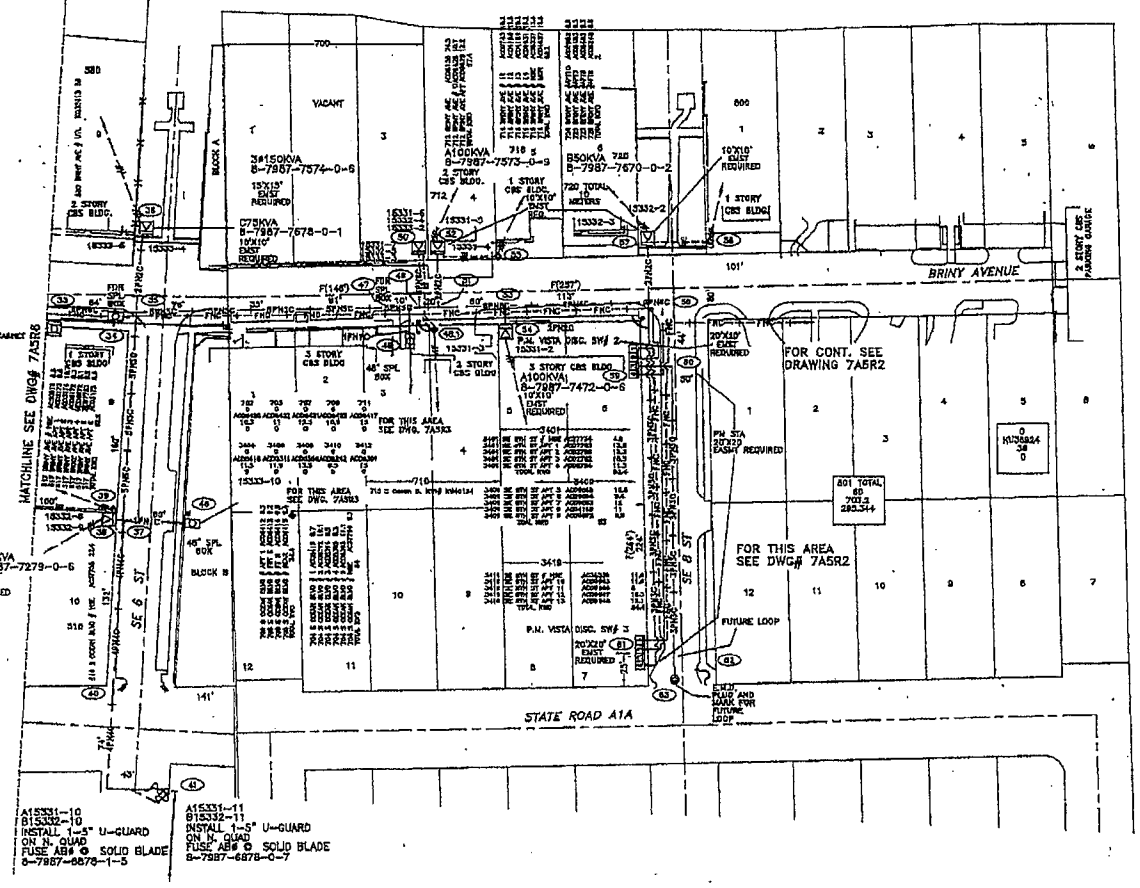

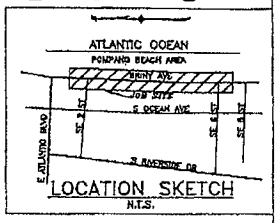

LOCATION SKETCH
N.T.S.

ATTENTION

ROW AGREEMENT

IMPORTANT

THE UNDERGROUND FACILITIES AND ASSOCIATED EQUIPMENT ARE IN THE RIGHT OF WAY DUE TO SPECIAL REQUEST BY THE LOCAL GOVERNMENT AGENCY AND ARE COVERED BY SPECIAL AGREEMENT WITH THE LOCAL GOVERNMENT. SHOULD THE LOCAL GOVERNMENT OR OTHER RIGHT OF WAY REQUIRE FPL TO RELOCATE, ADJUST OR REARRANGE ANY OF THESE FACILITIES, AS THEY MAY EXIST INITIALLY OR LATER BE MODIFIED, UPGRADED, OR OTHERWISE ALTERED, THE LOCAL GOVERNMENT SHALL PROVIDE FPL WITH A SUBSTITUTE LOCATION, INCLUDING ANY EASEMENTS THAT MAY BE NECESSARY, AND PAY ANY COSTS FOR THE RELOCATION, ADJUSTMENT, OR REARRANGEMENT. THE LOCAL GOVERNMENT SHALL ALSO REIMBURSE FPL FOR ANY COSTS TO LOCATE, EXPOSE PROTECT OR SUPPORT THE FACILITIES, IN THE EVENT OF FUTURE CONSTRUCTION OR EXCAVATION IN CLOSE PROXIMITY TO THE FACILITIES. REQUEST A COPY OF THE RIGHT OF WAY AGREEMENT FROM DOO FILES/DO FOR FURTHER DETAILS.

The location and existence of any facilities may not be relied upon by the supplier in responding to a bid or in complying with any contract. Supplier is responsible for evaluating site conditions both above and below ground including underground facility locations.

Ground Rod Information		
Location	Feet of Ground Rod Installed	Resistance (Ohms)

ATTENTION

PLEASE PROVIDE STREET ADDRESSES FOR THIS AREA.

CONSTRUCTION NOTES -- WR# 4860334

REQUIRED DRAWINGS
7A5R6(HATCH)
7A5R3 7A5R2
7A5R7 7A5S2
7A5R4 7A5S3
LOCAL CONTACT LIST
CALL DAVIDHRA 1-800-432-4770

REFERENCE DWG's

7A5R3
7A5R6
7A5S4

TWP: 49 RNG: 42 SEC: 08 CTR:

4860334	1	06/10/15	PULL PM/FDR CBLS, INST VISTA CABINETS, INSTALL PMDS. & PMTX'S			
ASBUILT	AUTH NO.	NO.	DATE	REVISION		

AS-BUILT COPY | AS-BUILT CREW PRINT

Job CERTIFIED COMPLETED as shown on this AS-BUILT print. Material changes shown on ROS.

As required ground rods have been driven & verified to be within FPL Standards. Values are shown at GI locations.

Easement?	YES ☐ NO ☐	Survey/Staked?	YES ☐ NO ☐	Work with SHOP	YES ☐ NO ☐
Tree Work?	YES ☐ NO ☐	Designer/Staked?	YES ☐ NO ☐	CT/Special Hist	YES ☐ NO ☐
Map Footing?	YES ☒ NO ☐	Trench Feet		Duct Bank Feet	

CITY	DRI. DIST.	COUNTY AIR	STATE RD	FAA	
WMD	AIR XING	COUNTY RD.	TRANSM.		

Posted by | Telephone Request? YES ☐ NO ☐ | CATV Request? YES ☐ NO ☐

DESIGNED BY	L. VAZQUEZ
DRAWN BY	J. TORRES/ALR.
DATE	6/10/15
MAP NO.	0-0342

0 20 40 80 FEET

N/A NB

BRINY AVE
CONVERSION

BRINY AVE BTWN SE 2 ST & SE 8 ST
POMPANO BEACH / BROWARD COUNTY, FL.

DWG NO. 7A5R7

WR# 4860334 SWO# D048-60-334

PLOT DATE: 6/10/2015 PLOT TIME: 10:06:24 AM DGN NAME: DGS

☐ INACCESSIBLE ☒ 13KV ☐ FUTURE 23KV ☐ 23KV ☒ SALT SPRAY ☐

ATTENTION
ROW AGREEMENT

IMPORTANT
THE UNDERGROUND FACILITIES AND ASSOCIATED EQUIPMENT ARE IN THE RIGHT OF WAY DUE TO SPECIAL REQUEST BY THE LOCAL GOVERNMENT AGENCY AND ARE COVERED BY SPECIAL AGREEMENT. NOW THE LOCAL GOVERNMENT, SHOULD THE LOCAL GOVERNMENT OR OTHER RIGHT OF WAY REQUIRE FPL TO RELOCATE, ADJUST OR REARRANGE ANY OF THESE FACILITIES, AS THEY MAY EXIST INITIALLY OR LATER BE MODIFIED, UPGRADED, OR OTHERWISE ALTERED, THE LOCAL GOVERNMENT SHALL PROVIDE FPL WITH A SUBSTITUTE LOCATION, INCLUDING ANY EASEMENTS THAT MAY BE NECESSARY, AND PAY ANY COSTS FOR THE RELOCATION, ADJUSTMENT, OR REARRANGEMENT. THE LOCAL GOVERNMENT SHALL ALSO REIMBURSE FPL FOR ANY COSTS TO LOCATE, DEPICK PROTECT OR SUPPORT THE FACILITIES. IN THE EVENT OF FUTURE CONSTRUCTION OR EXCAVATION IN CLOSE PROXIMITY TO THE FACILITIES, REQUEST A COPY OF THE RIGHT OF ROW AGREEMENT FROM DOC FILES/CO FOR FURTHER DETAILS.

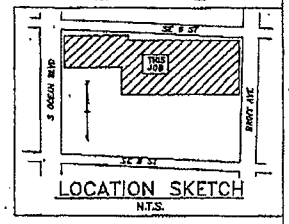

LOCATION SKETCH
N.T.S.

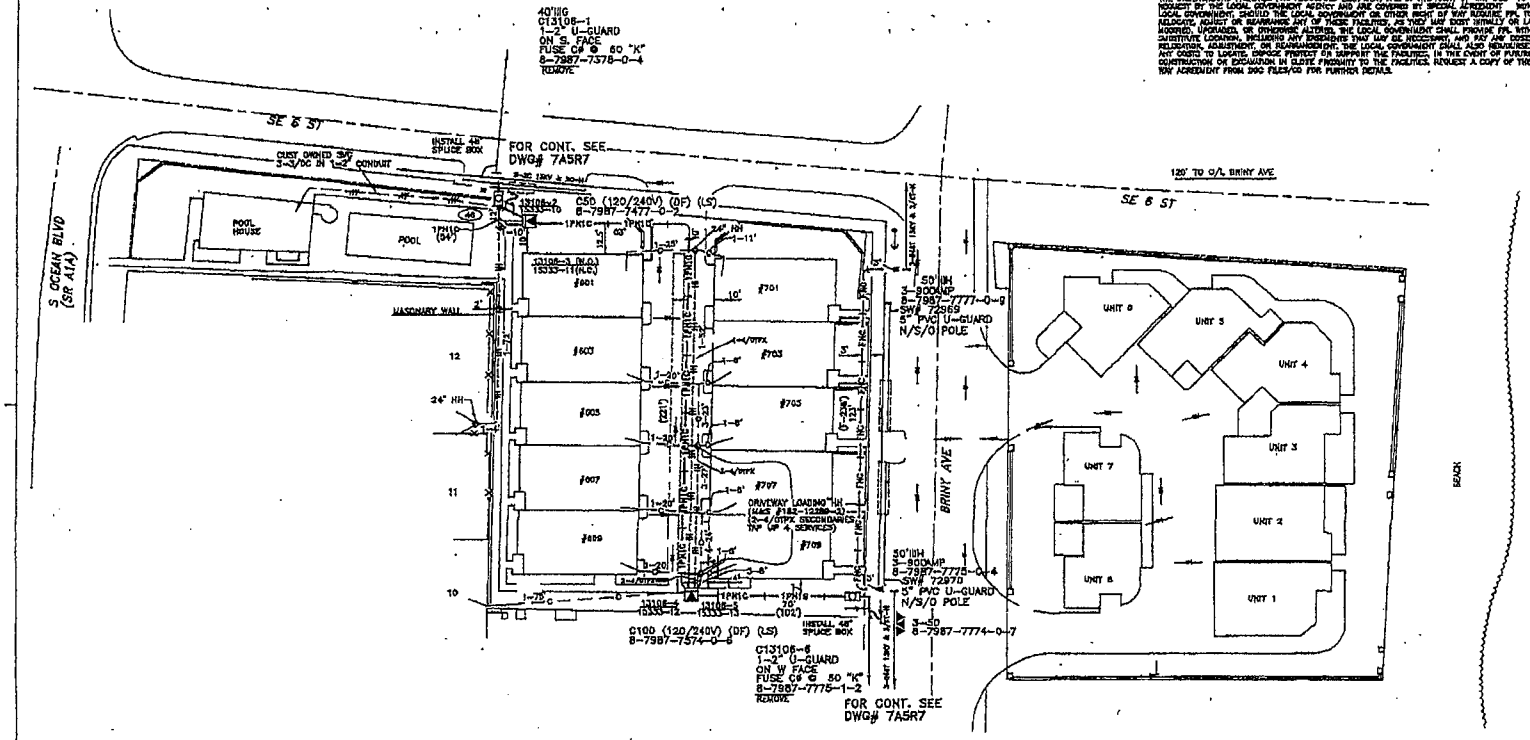

The location and existence of any facilities may not be relied upon by the supplier in responding to a bid or in complying with any contract. Supplier is responsible for evaluating site conditions both above and below ground including, underground facility locations.

Ground Rod Information		
Location	Feet of Ground Rod Installed	Resistance (Ohms)

CONSTRUCTION NOTES – WR# 4860334

REQUIRED DRAWINGS
7A5R8(NOTES)
7A5R2 7A5R2
7A5S4
7A5S2
7A5R3

UTILITY CONTACT LIST
CALL SUNSHINE 1-800-432-0770

N

REFERENCE DWG's

7A5S2
7A5S4
7A5R7

TWP 3 RNG 42 SEC 47 QTR

ASBUILT	AUTH NO.	NO.	DATE	REVISION
	4860334	3	03/09/15	PULL PR/FOR CBLS, INST VISTA CABINETS, INSTALL PADS, & PMTX'S
	2037764	2	07/05/07	INSTALL 2 PMTX TO SERVICE MYSTIC PLAMS 700 BRINY AVE
	1538533	1	06/20/03	RESEAL FUSES, PULL PRIMARY CABLE, & INSTALL TCS TO PROV SVC TO OCEAN PEARL TOWNHOMES
4/10/07	1538515	0	06/20/03	INSTALL PH SW'S & PULL FOR CABLE

AS-BUILT COPY — AS-BUILT CREW PRINT

Job CERTIFIED COMPLETED as shown on this AS-BUILT print. Material changes shown on RDS.

All required ground rods have been driven & verified to be within FPL Standards. Values are shown at all locations.

Easement? YES ☐ NO ☐ | Survey/Stake? YES ☐ NO ☐ | Work with SHOP YES ☐ NO ☐
Tree Work? YES ☐ NO ☐ | Designer/Stake? YES ☐ NO ☐ | CT/Special MAT YES ☐ NO ☐
Map Posting? YES ☒ NO ☐ | Trench Feet | Duct Bank Feet
CITY | DPL DIST. | COUNTY AIR | STATE RD | FAA
WMD | NR XING | COUNTY RD. | TRANSM.
Posted by | Telephone Request? YES ☐ NO ☐ | CATV Request? YES ☐ NO ☐

FPL

DESIGNED BY E. AUGUSTIN
DRAWN BY T. COLLINS/M.R.
DATE 03/09/15
MAP NO. G-0342
0 10 20 40 FEET

K/K NB
MYSTIC PLAMS
700 BRINY AVE
POMPANO BEACH/BROWARD COUNTY, FL

DWG NO. 7A5R3
WR# 4860334 WR# D048-60-334

PLOT DATE: 10/8/2015 PLOT TIME: 10:06:13 AM CAD NAME: JOB

☐ INACCESSIBLE ☒ 13KV ☐ FUTURE 23KV ☐ 23KV ☐ SALT SPRAY ☐ NULL

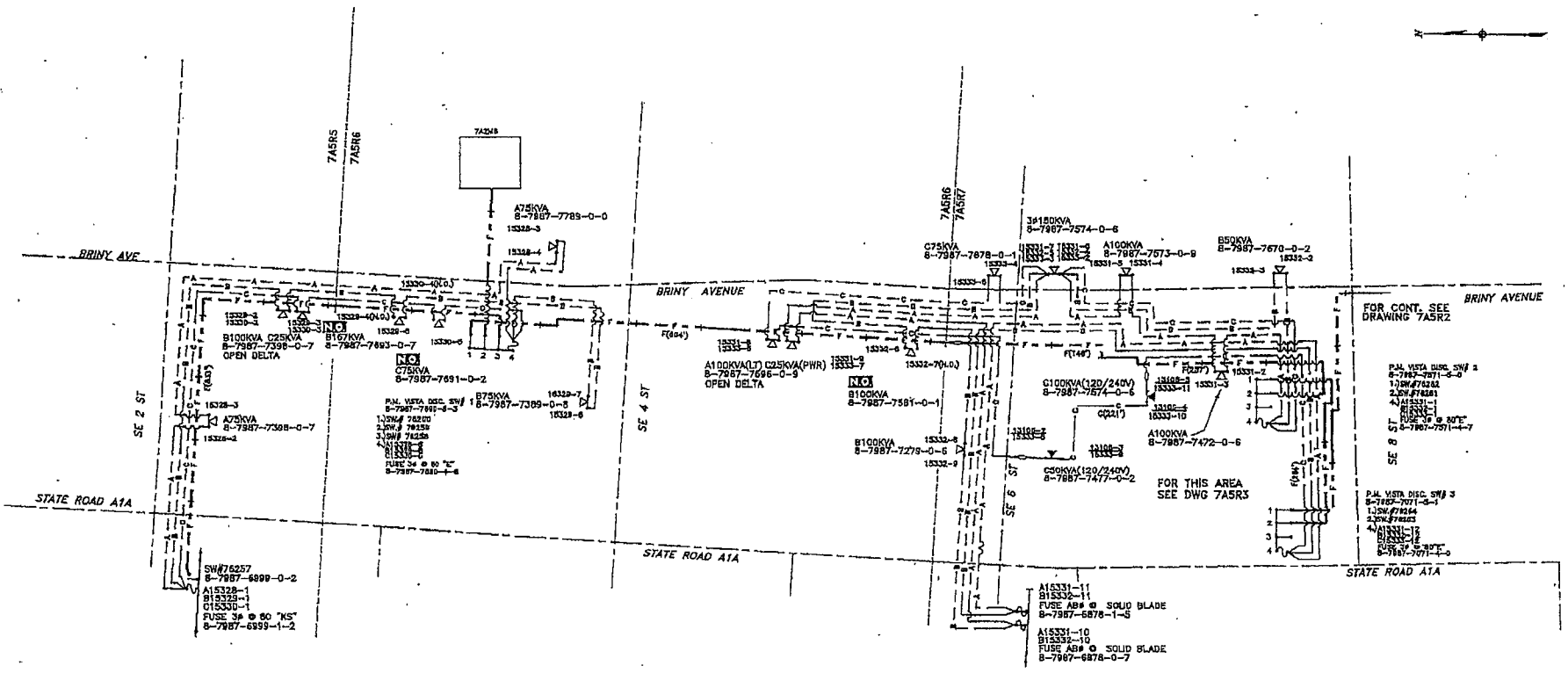

ATTENTION

ROW AGREEMENT

AGREEMENT
THE UNDERGROUND FACILITIES AND ASSOCIATED EQUIPMENT ARE IN THE RIGHT OF WAY DUE TO SPECIAL REQUEST BY THE LOCAL GOVERNMENT AGENCY, AND ARE COVERED BY SPECIAL AGREEMENT WITH THE LOCAL GOVERNMENT. SHOULD THE LOCAL GOVERNMENT OR OTHER RIGHT OF WAY NATURE FPL TO RELOCATE, ADJUST OR REMOVE ANY OF THESE FACILITIES, AS THEY MAY EXIST INITIALLY OR LATER BE MODIFIED, UPGRADED, OR OTHERWISE ALTERED, THE LOCAL GOVERNMENT SHALL PROVIDE FPL WITH A SUBSTITUTE LOCATION, INCLUDING ANY EASEMENTS THAT MAY BE NECESSARY, AND PAY ANY COSTS FOR THE RELOCATION, ADJUSTMENT, OR MODIFICATION. THE LOCAL GOVERNMENT SHALL ALSO REIMBURSE FPL FOR ANY COSTS TO LOCATE, DEFINE, PROTECT OR SUPPORT THE FACILITIES, IN THE EVENT OF FUTURE CONSTRUCTION OR EXCAVATION IN CLOSE PROXIMITY TO THE FACILITIES. REQUEST A COPY OF THE FORM OF WAY AGREEMENT FROM DOC FLDS/DG FOR FURTHER DETAILS.

The location and existence of any facilities may not be relied upon by the supplier in responding to a bid or in complying with any contract. Supplier is responsible for evaluating site conditions both above and below ground including underground facility locations.

CONSTRUCTION NOTES – WR# 4860334

REQUIRED DRAWINGS
7A5S3(NOTES)
7A5R5
7A5R6
7A5R7
7A5S4
7A5S5
7A5S2
7A5S3

UTILITY CONTACT LIST
CALL SUNSHINE 1-800-432-4770

REFERENCE DWG's

7A5R5 7A5R3
7A5R6
7A5R7
7A5R2

TWP/LOC _ RNG 42 SEC 08 QTR D

AS-BUILT COPY	AS-BUILT CREW PRINT	Easement? YES ☐ NO ☐	Survey/Staked? YES ☐ NO ☐	Work with SHOP YES ☐ NO ☐		DESIGNED BY	L. VAZQUEZ
DATE / WORK NOTE	Foreman's Signature / Date	Tree Work? YES ☐ NO ☐	Designer/Student YES ☐ NO ☐	CT/Special Mat YES ☐ NO ☐		DRAWN BY	J. TORRES/M.K.
Job CERTIFIED COMPLETED as shown on this AS-BUILT print. Material changes shown on RDS.		Neg Posting? YES ☒ NO ☐	Trench Feet	Dual Bank Feet		DATE	6/10/16
Signature / Date						MAP NO.	G-6342
All required ground rods have been driven & verified to be within FPL standards. Valves are shown of all locations.		Posted by	CITY / DR. DIST. / COUNTY AIR / STATE RD / FAA / WND / AIR JONG / COUNTY RD. / TRANSN.			0 N.T.S.	
Foreman's Signature / Date			Telephone Request? YES ☐ NO ☐	CATV Request? YES ☐ NO ☐		FSZT	

FPL

W/A CD
BRINY AVE
CONVERSION
BRINY AVE BTWN SE 2 ST & SE 8 ST
POMPANO BEACH/BROWARD COUNTY, FL

DWG NO. 7A5S4
WR# 4860334 CWR D048-60-334

ASBUILT	AUTH NO.	NO.	DATE	REVISION
	4860334	0	06/10/16	PULL PR/FDR CBLS, INST VISTA CABINETS, INSTALL PADS. & PMTX'S

PLOT DATE: 6/10/2016 PLOT TIME: 8:44:00 AM CAD MANUS 005

☐ INACCESSIBLE ☒ 13KV ☐ FUTURE 23KV ☐ 23KV ☒ SALT SPRAY ☐

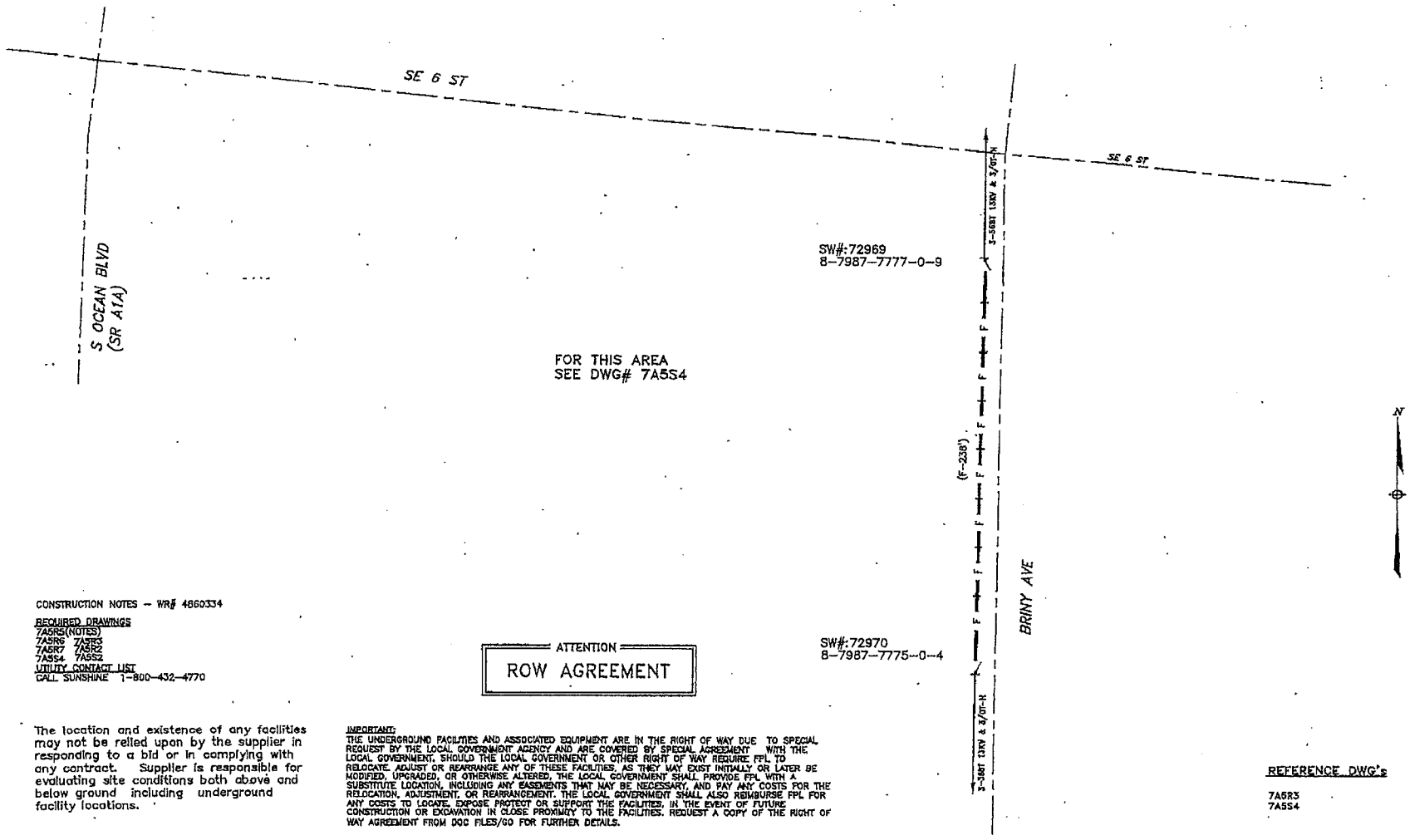

CONSTRUCTION NOTES – WR# 4860334

REQUIRED DRAWINGS
7A5R5(NOTES)
7A5R6 7A5R3
7A5R7 7A5R2
7A5S4 7A5S2

UTILITY CONTACT LIST
CALL SUNSHINE 1-800-432-4770

ATTENTION
ROW AGREEMENT

The location and existence of any facilities may not be relied upon by the supplier in responding to a bid or in complying with any contract. Supplier is responsible for evaluating site conditions both above and below ground including underground facility locations.

IMPORTANT:
THE UNDERGROUND FACILITIES AND ASSOCIATED EQUIPMENT ARE IN THE RIGHT OF WAY DUE TO SPECIAL REQUEST BY THE LOCAL GOVERNMENT AGENCY AND ARE COVERED BY SPECIAL AGREEMENT WITH THE LOCAL GOVERNMENT. SHOULD THE LOCAL GOVERNMENT OR OTHER RIGHT OF WAY REQUIRE FPL TO RELOCATE, ADJUST OR REARRANGE ANY OF THESE FACILITIES, AS THEY MAY EXIST INITIALLY OR LATER BE MODIFIED, UPGRADED, OR OTHERWISE ALTERED, THE LOCAL GOVERNMENT SHALL PROVIDE FPL WITH A SUBSTITUTE LOCATION, INCLUDING ANY EASEMENTS THAT MAY BE NECESSARY, AND PAY ANY COSTS FOR THE RELOCATION, ADJUSTMENT, OR REARRANGEMENT. THE LOCAL GOVERNMENT SHALL ALSO REIMBURSE FPL FOR ANY COSTS TO LOCATE, EXPOSE PROTECT OR SUPPORT THE FACILITIES, IN THE EVENT OF FUTURE CONSTRUCTION OR EXCAVATION IN CLOSE PROXIMITY TO THE FACILITIES. REQUEST A COPY OF THE RIGHT OF WAY AGREEMENT FROM DOC FILES/GO FOR FURTHER DETAILS.

REFERENCE DWG's
7A5R3
7A5S4

ASBUILT	AUTH NO.	NO.	DATE	REVISION
	4860334	3	03/09/15	PULL PH/FDR CABLE, INST VISTA CABINETS, INSTALL PMDS, & PMTX'S
	2037784	2	07/05/07	INSTALL 2 DUKTS TO SERVICE MYSTIC PALMS
4/10/07	1558515	0	08/20/05	INSTALL PH SW'S & PULL FDR CABLE

AS-BUILT COPY — AS-BUILT CREW PRINT
Job CERTIFIED COMPLETED as shown on this AS-BUILT print. Material changes shown on ROS.
All required ground rods have been driven & verified to be within FPL standards. Values are shown at all locations.

Easement? YES ☐ NO ☐ | Survey/Stake? YES ☐ NO ☐ | Work with SMOT YES ☐ NO ☐
Tree Work? YES ☐ NO ☐ | Designer/Stake? YES ☐ NO ☐ | CT/Special Mtr? YES ☐ NO ☐
Map Posting? YES ☒ NO ☐ | Trench Feet | Duct Bank Feet
PERMITS REQUIRED: CITY | DR. DIST. | COUNTY AIR | STATE RD | FAA | WMD | RR XING | COUNTY RD. | TRANSM.
Posted by | Telephone Request? YES ☐ NO ☐ | CATV Request? YES ☐ NO ☐

FPL

DESIGNED BY	E. AUGUSTIN
DRAWN BY	T. COLLINS/M.R.
DATE	03/09/15
MAP NO.	0-0342
0 FEET	N.T.S.

N/A NB
MYSTIC PALMS
700 BRINY AVE
POMPANO BEACH/BROWARD COUNTY, FL.
DWG NO. 7A5S2
WR# 4860334 WR# D048-60-334

PLOT DATE: 10/8/2015 PLOT TIME: 10:08:45 AM CAD NAME: MXR

☐ INACCESSIBLE ☒ 15KV ☐ FUTURE 23KV ☐ 23KV ☒ SALT SPRAY ☐ ROCK

ATTENTION
ROW AGREEMENT

IMPORTANT:
THE UNDERGROUND FACILITIES AND ASSOCIATED EQUIPMENT ARE IN THE RIGHT OF WAY DUE TO SPECIAL REQUEST BY THE LOCAL GOVERNMENT AGENCY AND ARE COVERED BY SPECIAL AGREEMENT WITH THE LOCAL GOVERNMENT. SHOULD THE LOCAL GOVERNMENT OR OTHER RIGHT OF WAY REQUIRE FPL TO RELOCATE, ADJUST OR REARRANGE ANY OF THESE FACILITIES, AS THEY MAY EXIST INITIALLY OR LATER BE MODIFIED, UPGRADED, OR OTHERWISE ALTERED, THE LOCAL GOVERNMENT SHALL PROVIDE FPL WITH A SUBSTITUTE LOCATION, INCLUDING ANY EASEMENTS THAT MAY BE NECESSARY, AND PAY ANY COSTS FOR THE RELOCATION, ADJUSTMENT, OR REARRANGEMENT. THE LOCAL GOVERNMENT SHALL ALSO REIMBURSE FPL FOR ANY COSTS TO LOCATE, EXPOSE PROTECT OR SUPPORT THE FACILITIES, IN THE EVENT OF FUTURE CONSTRUCTION OR EXCAVATION IN CLOSE PROXIMITY TO THE FACILITIES. REQUEST A COPY OF THE RIGHT OF WAY AGREEMENT FROM DOC FILES/GO FOR FURTHER DETAILS.

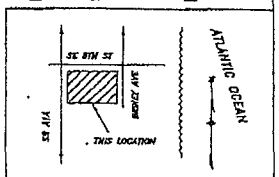

LOCATION SKETCH
N.T.S.

The location and existence of any facility may not be noted upon by the supplier in respecting to a bid or in complying with any contract. Supplier is responsible for evaluating site conditions both above and below ground including underground facility locations.

FOR CONT. SEE DWG# 7A5R7

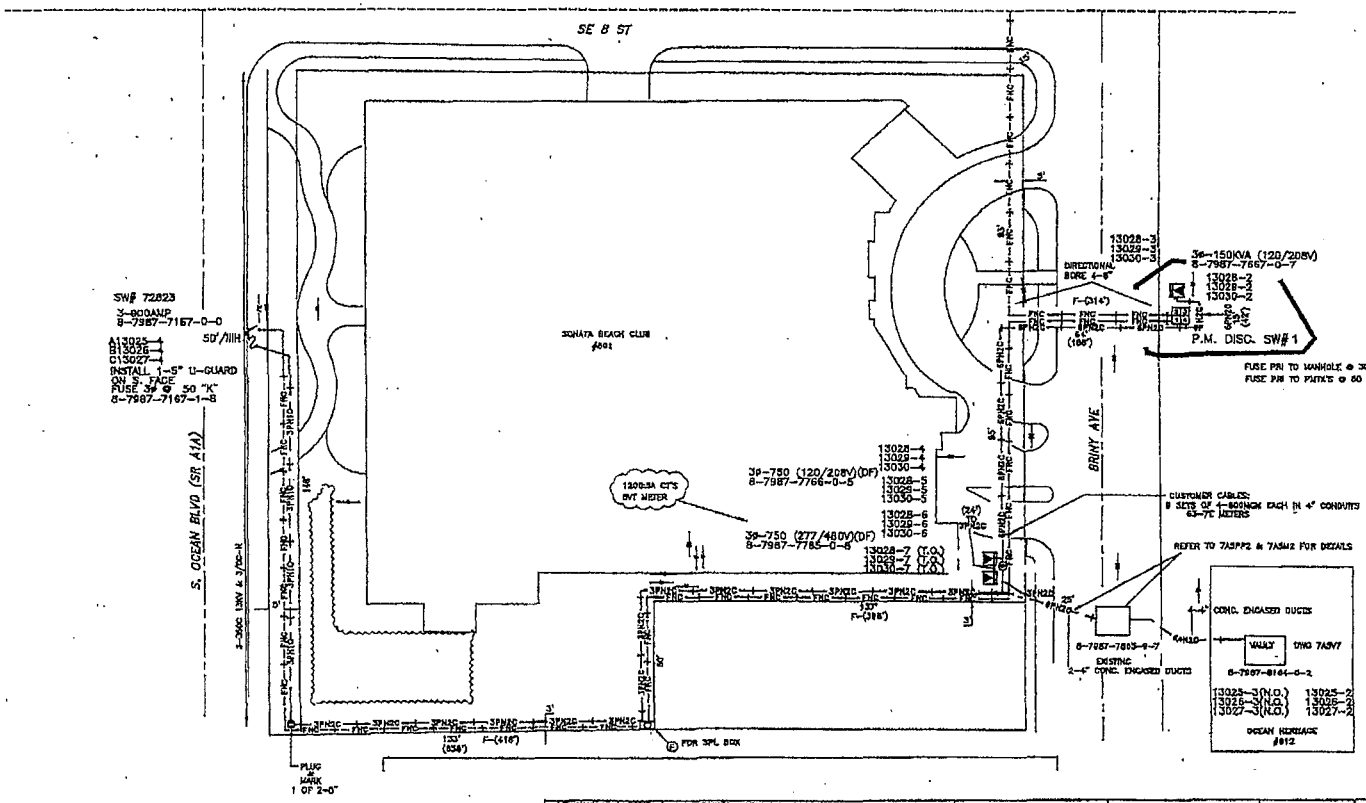

CONSTRUCTION NOTES - WR# 4860334
REQUIRED DRAWINGS
7A5R3(NOTES)
7A5R5 7A5R6
7A5R7 7A5S1
7A5S4 7A5S2
UTILITY CONTACT LIST
CALL SUNSHINE 1-800-432-4770

P.M. DISC. SW# 1	
GRID# 8-7987-7666-5-1	
COMPARTMENT 2	COMPARTMENT 3
SW.#72830 8-7987-7860-3-0	A13025-1 B13026-1 C13027-1 FUSE 3# @ 60 "E" 8-7987-7668-3-4
WEST TO SW.#72823	
COMPARTMENT 1	COMPARTMENT 4
SW.#72828 8-7987-7668-1-0 NORTH TO VISTA CAB. #3 COMP. 1 SW.# 72824	A13025-1 B13026-1 C13027-1 FUSE 3# @ 30 "E" 8-7987-7668-4-3

COMP 3 TO 3# PMT#'S

COMP 4 TO OCEAN HERITAGE VAULT.

REFERENCE DWG's

7A5S1
7A5PP2
7A5M2
7A5V7
7A5R7

	4860334	3	03/09/15	FULL PRI/FDR CBLE, INST VISTA CABINETS, INSTALL PMDS, & PMT#'S
09/22/07	1488932	2	02/01/06	I.P.D. ADD TX TO LOOP
	1488932	1	06/17/05	FULL PRIMARY CABLE & INST 2 3Ø 750KVA PMT#'S TO SVC SONATA BEACH CLUB
	1488916	0	05/17/05	FULL FEEDER CABLE & INST PMD#1 TO PROV SVC TO OCEAN HERITAGE VAULT
AS-BUILT	AUTH NO.	NO.	DATE	REVISION

AS-BUILT COPY — AS-BUILT CREW PRINT
Engr. Signature — Date
AS CONTRACTED COMPLETED as shown on this AS-BUILT print. Material changes shown on RVS.
Signature — Date
All finished ground rods have been driven & verified to be within FPL standards. Values are shown at all locations.
Foreman's Signature — Date

Easement? YES ☐ NO ☐	Survey/Stake? YES ☐ NO ☐	Work with SMO? YES ☐ NO ☐	
Tree Work? YES ☐ NO ☐	Designer/Stake? YES ☐ NO ☐	CT/Special Mtr? YES ☐ NO ☐	
Map Posting? YES ☒ NO ☐	Trench Feet	Duct Bank Feet	
	CITY / DR. DIST.	COUNTY AIR	STATE RD / FAA
	WMO / RR XING	COUNTY RD.	TRANSM.
Posted by	Telephone Request? YES ☐ NO ☐	CATV Request? YES ☐ NO ☐	

FPL

DESIGNED BY	E. AUGUSTIN
DRAWN BY	T. COLLINS/M.R.
DATE	03/09/15
MAP NO.	P-0343

0 10 20 40 FEET

N/A NB
SONATA BEACH CLUB
801 BRINY AVENUE
POMPANO BEACH/BROWARD COUNTY, FL
DWG NO. 7A5R2
WR# 4860334 WO# D048-60-334

PLOT DATE: 3/10/2015 PLOT TIME: 11:05:58 AM CAD NAME: SDR