City of Pompano Beach, Purchasing Division
1190 N.E. 3rd Avenue, Building C
Pompano Beach, Florida, 33060

September 11, 2012

ADDENDUM #2, BID H-23-12
REHABILITATION OF WASTEWATER PUMP STATION NO. 65

To Whom It May Concern,

The deadline for written questions is extended to 5:00 p.m., Friday, September 14.

Please review the following responses to requests for information.

Q1: Control Panel – Plans indicate we are supposed to use Champion Controls. However there seems to be conflicts between sole source pump supplier and sole source panel supplier. Can an equal for the control panel be used?

A1: Bids will be considered for approved equals to the panel specified. Detailed information regarding any proposed substitute must be submitted to the City for review by September 14.

Q2: The City has received several requests to approve pumps as equal to the pumps specified in the bid.

A2: Detailed information, including model/part numbers, etc., for any proposed substitute pump must be submitted to the City for review by September 14. The City's consultant prepared a flow analysis of the pump station, and this document is attached for your reference.

The remainder of the solicitation is unchanged at this time.

Acknowledge receipt of this Addendum in the area provided on Page 14 of the bid.

Very truly yours,

Leeta Hardin
General Services Director

enclosure

cc: website
file

City of Pompano Beach

Pump Station #65 Rehabilitation

100 % Pump Station #65 Calculations
May 2012

ENGINEERING

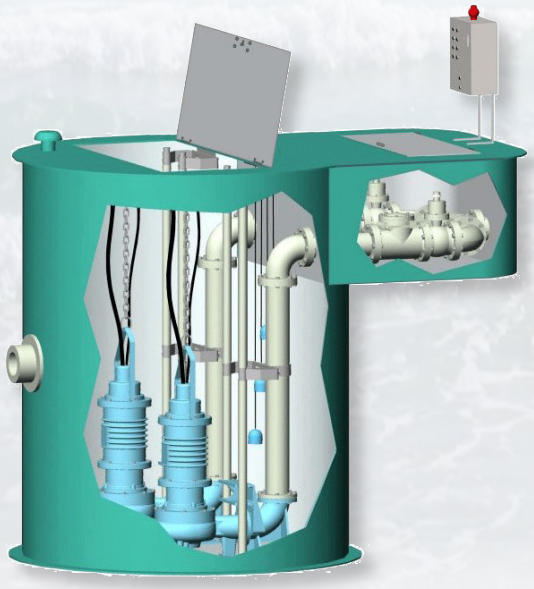

EXCELLENCE

Prepared By:

EAC Consulting, Inc.
WWW.EACCONSULT.COM
CA# 7011

815 NW 57th Avenue
Suite 402
Miami, FL 33126

Gregory A, Mendez, P.E.
State of Florida
P.E. 64718

Table of Contents

Introduction	2
Peak Flow Analysis and Assumptions	2
Pump Calculations	3
Flotation Calculations	7
Pump Calculations Summary of Results	10

List of Appendices

Appendix A – Pump Run Time & Average Daily Flow

Appendix B – Connection Pressures

Appendix C – EP-1115 System Requirements

Appendix D – Pump Rating

Appendix E – Water Table Map

Appendix F – Site Plan

Introduction

The services of EAC Consulting, Inc. were retained for the rehabilitation of City of Pompano Beach Pump Station #65 located on SE 10th Street between SE 6th Terrace and SE 7th Avenue. Pump station #65 serves the surrounding residential community. EAC, in coordination with the City, was tasked to replace the pump station's outdated parts and design a new pump station capable of handling the current peak flows. The rehabilitation includes replacement of the existing pumps and electrical components, upsizing of existing discharge pipes, and structural modifications.

The new submersible pumps shall have the capability to operate as a duplex system and be designed to accommodate a peak flow based upon average daily flow multiplied by a peaking factor adopted from Broward County. Complimentary electrical components shall include an upgrade to the electrical panel, a SCADA system, emergency alarms, time lapse meters and an emergency generator connection. The structural modifications shall include the replacement of existing grouts and new wall penetration modifications in order to facilitate the installation of the new 6" force main. Ultimately, the rehabilitation of Pump Station #65 is designed to provide service for a new peak flow while adhering to the Broward County criteria of less than 8 hours per day average running.

Peak Flow Analysis and Assumptions:

As previously mentioned, Pump station #65 was designed to accommodate a peak flow based upon average daily flow multiplied by a peaking factor obtained from Broward County. The approximated average daily flow, $Q_{Avg.}$, was derived based on the existing run times provided by the City of Pompano Beach during the 15 day time period between 2/17/11 and 3/3/11 and existing flow rates gathered from a drawdown test performed by the City of Pompano Beach forces (refer to Appendix A). Average daily flow was determined to be as follows:

$$Q_{Avg.} = (\sum \text{Sum}\ (RT \times Q_{Rate} \div 24 \div 60)) \div 15$$

Where: RT = Run Time (min)

Q_{Rate} = Existing Pump Flow Rate (gpm)

24 = 24 (hrs)

60 = 60 (min)

Peak flow was determined as follows:

$$Q_{peak} = Q_{Avg.} \times 4.0$$ [1]

Where: Q_{peak} = Peak flow (gpm)

$Q_{Avg.}$ = Average daily flow (gpm)

The average daily flow was determined to be 45 gpm. The resulting peak flow discharging into Pump Station #65 is approximately 180 gpm. However, an additional 67 gpm, resulting in a total peak flow of 247 gpm, were added to the peak flow in order to account for EP-1115 (from Anue Water Technologies, refer to Appendix C), a system that connects to the discharge pipes to allow cleansing of the wet well.

[1] Adopted Broward County peaking factor

1. Demand Estimation

Information provided by City of Pompano Beach : 212 Single Family Parcels
87 Condo Units
8 Condos

Average Flow GPM	Peak Factor	Peak Flow GPM
45.00	4	180.00
		180.00
EP-1115 SYSTEM REQUIREMENTS	=	67.00
Total Peak Demand	=	**247.00**

The Peaking facor was obtained from Broward County guidelines = 4
For determining ability to provide potable water and sanitary sewer service
Table 8 - Sanitary Sewer Peaking Factors

2. Equivalent Length

6-inch pipe within wet well and valve vault connecting to existing 6-inch force main

System Components	Equivalent Length of Components	No. of Components	Equivalent Length (ft)
Straight pipe	30	1	30
90˚ Bends	7.2	2	14.4
Plug valve	2.6	1	2.6
Check valve	52	1	52
Tee	15	1	15
		Total	**114**

3. Calculating Inflow/Infiltration (I/I)

It is already included in our average daily flow

4. Develop System Head Curve

Equivalent length of 6-inch pipe connecting to existing 6-inch Force Main (ft) 114

Proposed Force main Diameter(in) 6

Calculate static head (Distance b/w bottom of wet well and Discahrge Crown of pipe elev.)(ft)
1.40 - -13.48 = 14.88

Connection Pressure:

Max. connection Pressure (psi) = 22

Max. connection Pressure (ft) = **50.82**

Min. connection Pressure (psi) = 0

Min. connection Pressure (ft) = 0

5. Develop System Head Curve at Maximum Connection Pressure as follows:

c-factor	gpm	Size (in)	length (ft)	Friction loss (ft)	Static Head (ft)	Max FM Pressure	Total Head
100	0	6	114	0.00	14.88	50.82	**65.70**
100	100	6	114	0.19	14.88	50.82	**65.89**
100	200	6	114	0.70	14.88	50.82	**66.40**
100	247	6	114	1.04	14.88	50.82	**66.74**
100	300	6	114	1.49	14.88	50.82	**67.19**
100	400	6	114	2.53	14.88	50.82	**68.23**
100	500	6	114	3.82	14.88	50.82	**69.52**
100	600	6	114	5.36	14.88	50.82	**71.06**
100	700	6	114	7.13	14.88	50.82	**72.83**
100	750	6	114	8.10	14.88	50.82	**73.80**
100	800	6	114	9.12	14.88	50.82	**74.82**
100	900	6	114	11.35	14.88	50.82	**77.05**
100	1000	6	114	13.79	14.88	50.82	**79.49**
100	1100	6	114	16.45	14.88	50.82	**82.15**
100	1200	6	114	19.32	14.88	50.82	**85.02**
100	1300	6	114	22.40	14.88	50.82	**88.10**
100	1400	6	114	25.69	14.88	50.82	**91.39**
100	1500	6	114	29.19	14.88	50.82	**94.89**
100	1600	6	114	32.89	14.88	50.82	**98.59**
100	1700	6	114	36.80	14.88	50.82	**102.50**
100	1800	6	114	40.90	14.88	50.82	**106.60**
100	1900	6	114	45.21	14.88	50.82	**110.91**
100	2000	6	114	49.71	14.88	50.82	**115.41**

5.1 Develop System Head Curve at Minimum Connection Pressure as follows:

c-factor	gpm	Size (in)	length (ft)	Friction loss (ft)	Static Head (ft)	Min FM Pressure	Total Head
100	0	6	114	0.00	14.88	0.00	**14.88**
100	100	6	114	0.19	14.88	0.00	**15.07**
100	200	6	114	0.70	14.88	0.00	**15.58**
100	247	6	114	1.04	14.88	0.00	**15.92**
100	300	6	114	1.49	14.88	0.00	**16.37**
100	400	6	114	2.53	14.88	0.00	**17.41**
100	500	6	114	3.82	14.88	0.00	**18.70**
100	600	6	114	5.36	14.88	0.00	**20.24**
100	700	6	114	7.13	14.88	0.00	**22.01**
100	800	6	114	9.12	14.88	0.00	**24.00**
100	900	6	114	11.35	14.88	0.00	**26.23**
100	1000	6	114	13.79	14.88	0.00	**28.67**
100	1100	6	114	16.45	14.88	0.00	**31.33**
100	1200	6	114	19.32	14.88	0.00	**34.20**
100	1300	6	114	22.40	14.88	0.00	**37.28**
100	1400	6	114	25.69	14.88	0.00	**40.57**
100	1500	6	114	29.19	14.88	0.00	**44.07**
100	1575	6	114	31.95	14.88	0.00	**46.83**
100	1600	6	114	32.89	14.88	0.00	**47.77**
100	1700	6	114	36.80	14.88	0.00	**51.68**
100	1800	6	114	40.90	14.88	0.00	**55.78**
100	1900	6	114	45.21	14.88	0.00	**60.09**
100	2000	6	114	49.71	14.88	0.00	**64.59**

6. Wet Well Design

For the **FLYGT NP3153.181HT, 230 mm Impeller, 12 HP, 3-Phase (1760 RPM)**

Duty point at **Maximum** connection pressure: 290 gpm — TDH = 67 ft

Duty point at **Minimum** connection pressure

Use 'D' = 72.00 inches

Use 'D' = 6.00 ft

Area of wet well = 28.28 ft^2

Pump Rate (Q) = 290.00 **gpm**

Design Pump Cycle Time (T) = 4.00 **minutes**

Storage @ Drawdown depth (V)= 290.00 **gallons** V = (Q * T) / 4

Storage @ Drawdown depth = 38.77 ft^3

Pump Drawdown depth = 1.4 **ft**

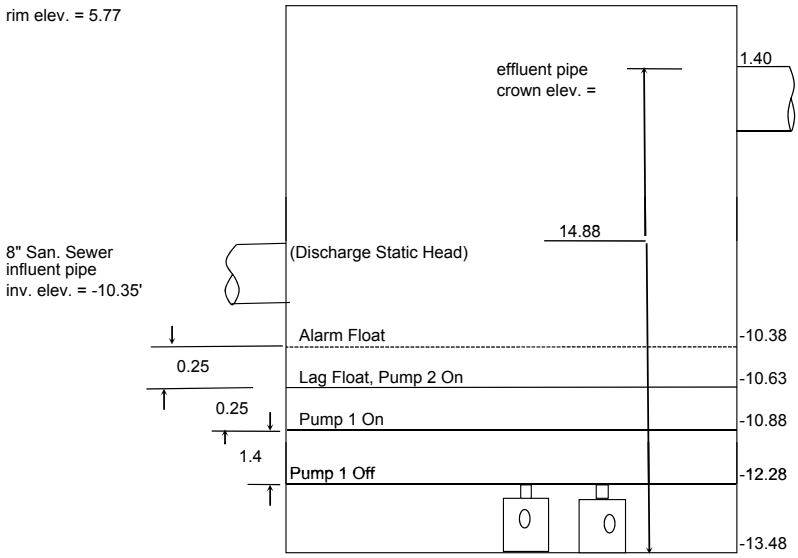

Rim Elevation	5.77
Effluent Invert	0.90
Effluent Crown	1.40
Influent Invert$_1$	-10.35
Alarm Float	-10.38
Lag Float, Pump 2 On	-10.63
Pump 1 On	-10.88
Pump Off	-12.28
Bottom of Well	-13.48

Note: Elevations shown are per 1929 NGVD Datum

7. Pump Cycle Times (Peak)

Pump Cycle time for Peak Flow (based upon **MAXIMUM** system curve):

Storage @ Drawdown depth (V) =	290.00	gallons	
Pump Rate (Q) =	290.00	gpm	
Peak Flow into Wet Well (S) =	247.00	gpm	
Pump Run Time (Prun) =	6.74	minutes	Prun = V/(Q-S)
Pump Rest Time (Prest) =	1.17	minutes	Prest = V/S
Pump Cycle Time for Peak Flow (Tp) =	**7.92**	**minutes**	Cycle Time (T) = Prun + Prest
Number of Cycles Per hour (C)=	8	cycles	(approximate) $(60/T_P)$

8. Pump Cycle Times (Average)

Pump Cycle time for Average Flow (based upon **MAXIMUM** system curve):

Storage @ Drawdown depth (V) =	290.00	gallons	
Pump Rate (Q) =	290.00	gpm	
Average Flow into Wet Well (S) =	45.00	gpm	Avg. Daily Flow + I/I
Pump Run Time (Prun) =	1.18	minutes	Prun = V/(Q-S)
Pump Rest Time (Prest) =	6.44	minutes	Prest = V/S
Pump Cycle Time for Average Flow (T_a) =	**7.63**	**minutes**	Cycle Time (T) = Prun + Prest
Number of Cycles Per hour (C)=	8	cycles	$(60/T_a)$

9. Pump Running Time (Average)

Number of Cycles Per hour (C)=	8	cycles	(approximate) $(60/T_a)$
Pump Run Time per Hour (RT) =	9.31	minutes	(Prun x C)
Pump Run Time per Day =	**3.72**	**Hours**	(RT x 24)/60

3.72 hr < 8hr/day; adheres to BCWWS criterion

10. System Requirements Verification:

6-inch pipe:

Flowrate:	290	gpm
Pipe Dia.	6	in
Velocity:	3.3	ft/s

Meets Cleansing Velocity Req.? : yes

Flotation Calculations:

Flotation calculations were performed to ensure that the existing wet well structure and the existing valve box could withstand any buoyant forces resulting from the ground water elevations on the site. The total volume of displaced water was calculated for each structure, including the bottom slab and structure walls below the water table. The resulting volume was then multiplied by the unit weight of water (62.4 lbs/ft^3) to obtain the total upward force. Next, the counteracting downward force was calculated based on the volume of the concrete in the structure and any soil weight above the lip of the bottom slab. As a conservative approach, the weight of the pumps, pipes, valves, fittings, and the angle of internal friction of the structure's backfill were not included in the calculations which would add significantly to the factor of safety. Refer to the table below and the supporting calculations for a summary of the flotation calculations.

Wet Well Floatation Calculations

Rim Elev =	5.77	ft	
Bottom Elev =	-13.48	ft	
Water Table Elev =	3.50	ft	
Ground Elev =	5.60	ft	
Wet Well Dia. =	6	ft	(D_1)
Wet Well Wall =	0.67	ft	
Wet Well Height =	19.25	ft	(H_1)
Top Slab Lip =	0.00	ft	
Top Slab Dia. =	0.00	ft	
Top Slab Height=	0.00	ft	
Bottom Slab Lip =	1.00	ft	
Bottom Slab Dia. =	9.34	ft	(D_2)
Bottom Slab Height=	1.00	ft	(H_2)
γ_{water} =	62.4	lbs/ft ^{3}	
γ_{soil} =	100	lbs/ft ^{3}	
γ_{conc} =	150	lbs/ft ^{3}	
γ_{sum} = γ_{soil} - γ_{water} =	37.6	lbs/ft ^{3}	

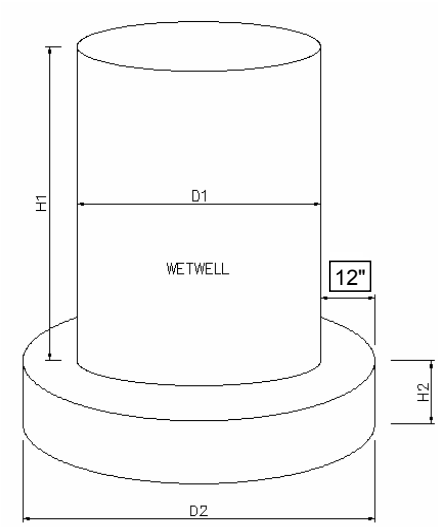

Volume (V) = $\dfrac{\pi \times (D)^2 \times H}{4}$

Upward Forces from Displaced Volume of Water:

Wet Well Displaced Volume =	718.12	ft^3
Bottom Slab Displaced Volume =	68.48	ft^3
Total Volume Displace (V_1) =	786.60	ft^3
F_{up} =	$V_1 \times \gamma_{water}$	
F_{up} =	**49,084.09**	**lbs**

Total Downward force = weight of soil + weight of concrete

Weight of Soil:	Volume of Soil above water table (V_2) =	54.99	ft^3
	Volume of Soil below water table (V_3) =	444.67	ft^3
	F_{soil} =	$V_2 \times \gamma_{soil} + V_3 \times \gamma_{sum}$	
	F_{soil} =	22,218.82	lbs
Weight of Concrete :	Top Slab Concrete Volume =	0.00	ft^3
	Wet Well Conc. Volume =	640.88	ft^3
	Bottom Slab Conc. Volume=	68.48	ft^3
	Total Concrete Volume (V_3) =	709.36	ft^3
	F_{conc} =	$V_3 \times \gamma_{conc}$	
	F_{conc} =	106,403.64	lbs
	Total Downward Force =	$F_{soil} + F_{conc}$	
	Total Downward Force =	**128,622.46**	**lbs**

Flotation Test = 128,622.46 > 49,084.09 Pass

Valve Box Flotation Calculations

Structure:	Valve Box
Ground Elev	5.6 ft
Top Elev	5.74 ft
Bottom Elev	0.54 ft
Water Table	3.5 ft
Outer Length	5.33 ft
Outer Width	5.33 ft
Inner Length	4 ft
Inner Width	4 ft
Top Slab	
Length	0 ft
Width	0 ft
Height	0 ft
Bottom Slab	
Lip	0 ft
Length	5.33 ft
Width	5.33 ft
Height	1 ft

γ_{water} =	62.4	lbs/ft ^{3}
γ_{soil} =	100	lbs/ft ^{3}
γ_{conc} =	150	lbs/ft ^{3}
γ_{sum} = γ_{soil} - γ_{water} =	37.6	lbs/ft ^{3}

Volume (V) = Length x Width x Height

Upward Forces from Displaced Volume of Water:

Structure Displaced Volume =	84.09	ft^3
Bottom Slab Displaced Volume =	28.41	ft^3
Total Volume Displace (V_1) =	112.50	ft^3
F_{up} =	$V_1 \times \gamma_{water}$	
F_{up} =	**7,019.95**	**lbs**

Total Downward force = weight of soil + weight of concrete

Weight of Soil:	Volume of Soil above water table (V_2) =	0.00	ft^3
	Volume of Soil below water table (V_3) =	0.00	ft^3
	F_{soil} =	$V_2 \times \gamma_{soil} + V_3 \times \gamma_{sum}$	
	F_{soil} =	0.00	lbs
Weight of Concrete :	Top Slab Concrete Volume =	0.00	ft^3
	Structure Conc. Volume =	64.53	ft^3
	Bottom Slab Conc. Volume=	28.41	ft^3
	Total Concrete Volume (V_3) =	92.94	ft^3
	F_{conc} =	$V_3 \times \gamma_{conc}$	
	F_{conc} =	13,940.28	lbs
	Total Downward Force =	$F_{soil} + F_{conc}$	
	Total Downward Force =	**13,940.28**	**lbs**

Flotation Test = 13,940.28 > 7,019.95 Pass

Pump Calculations Summary of Results:

The rehabilitation design of pump station #65 was based on a calculated peak flow of 247 gpm which came from an average daily flow provided by the City of Pompano Beach multiplied by the Broward County peaking factor plus the required flow for EP-1115. Refer to the summary table below as well as the supporting calculations.

$Q_{Avg.}$, Average Daily Flow (gpm)	Q_{peak}, Peak Flow (gpm)	Average Pump Run Time	Pump Model and Horsepower	Operating Point
45	247	3.72 hours	FLYGT NP3153.18HT, 230 mm Impeller, 12 HP, 3 phase, 1760 RPM	290 gpm @ 67 TBH

Appendix A

Pump Run
Time

&

Average Daily
Flow

PUMP Activity Report with Station Filter 65

DATE	STATION	POINT	ADDRESS	MAX ON	TOTAL ON	AVG ON	TIMES ON	Total Run Time Per day	Conversion (mn)	Flow Rate (gpm)	Volume (gal/day)	Avg daily Flow (gpm)
1/1/2011	L.S. #65	Pump #1	65A7	0:33:09	23:44:41	0:09:16	19					
1/1/2011	L.S. #65	Pump #2	65A8	0:00:00	0:00:00	0:00:00	0	23:44:41	1424.68	247	351896.78	244.37
1/2/2011	L.S. #65	Pump #1	65A7	0:15:50	23:26:46	0:05:25	39					
1/2/2011	L.S. #65	Pump #2	65A8	0:00:00	0:00:00	0:00:00	0	23:26:46	1406.77	247	347471.37	241.30
1/3/2011	L.S. #65	Pump #1	65A7	3:49:27	23:00:51	0:07:11	55					
1/3/2011	L.S. #65	Pump #2	65A8	0:00:00	0:00:00	0:00:00	0	23:00:51	1380.85	247	341069.95	236.85
1/4/2011	L.S. #65	Pump #1	65A7	5:38:18	22:10:56	0:09:46	66					
1/4/2011	L.S. #65	Pump #2	65A8	0:00:00	0:00:00	0:00:00	0	22:10:56	1330.93	247	328740.53	228.29
1/5/2011	L.S. #65	Pump #1	65A7	3:09:48	8:56:50	0:06:47	63					
1/5/2011	L.S. #65	Pump #2	65A8	2:33:45	9:52:47	0:03:56	122	18:49:37	1129.62	247	279015.32	193.76
1/6/2011	L.S. #65	Pump #1	65A7	1:54:13	5:55:22	0:04:26	80					
1/6/2011	L.S. #65	Pump #2	65A8	0:35:02	8:54:20	0:02:10	237	14:49:42	889.70	247	219755.90	152.61
1/7/2011	L.S. #65	Pump #1	65A7	0:00:00	0:00:00	0:00:00	0					
1/7/2011	L.S. #65	Pump #2	65A8	0:04:29	11:15:43	0:01:59	338	11:15:43	675.72	247	166902.02	115.90
1/8/2011	L.S. #65	Pump #1	65A7	0:00:00	0:00:00	0:00:00	0					
1/8/2011	L.S. #65	Pump #2	65A8	0:04:19	10:53:14	0:02:15	288	10:53:14	653.23	247	161348.63	112.05
1/9/2011	L.S. #65	Pump #1	65A7	0:00:00	0:00:00	0:00:00	0					
1/9/2011	L.S. #65	Pump #2	65A8	0:04:37	11:12:28	0:02:10	307	11:12:28	672.47	247	166099.27	115.35
1/10/2011	L.S. #65	Pump #1	65A7	0:00:00	0:00:00	0:00:00	0					
1/10/2011	L.S. #65	Pump #2	65A8	0:04:20	11:29:45	0:02:20	294	11:29:45	689.75	247	170368.25	118.31
1/11/2011	L.S. #65	Pump #1	65A7	0:00:00	0:00:00	0:00:00	0					
1/11/2011	L.S. #65	Pump #2	65A8	0:03:57	11:28:02	0:02:10	317	11:28:02	688.03	247	169944.23	118.02
1/12/2011	L.S. #65	Pump #1	65A7	0:00:00	0:00:00	0:00:00	0					
1/12/2011	L.S. #65	Pump #2	65A8	0:05:17	11:12:36	0:02:19	289	11:12:36	672.60	247	166132.20	115.37
1/13/2011	L.S. #65	Pump #1	65A7	0:00:00	0:00:00	0:00:00	0					
1/13/2011	L.S. #65	Pump #2	65A8	0:05:32	11:30:28	0:02:16	304	11:30:28	690.47	247	170545.27	118.43
1/14/2011	L.S. #65	Pump #1	65A7	0:00:00	0:00:00	0:00:00	0					
1/14/2011	L.S. #65	Pump #2	65A8	0:05:44	11:28:26	0:02:13	309	11:28:26	688.43	247	170043.03	118.09
1/15/2011	L.S. #65	Pump #1	65A7	0:00:00	0:00:00	0:00:00	0					
1/15/2011	L.S. #65	Pump #2	65A8	0:04:35	11:28:36	0:02:14	306	11:28:36	688.60	247	170084.20	118.11
1/16/2011	L.S. #65	Pump #1	65A7	0:00:00	0:00:00	0:00:00	0					
1/16/2011	L.S. #65	Pump #2	65A8	0:04:53	11:35:37	0:02:10	321	11:35:37	695.62	247	171817.32	119.32
1/17/2011	L.S. #65	Pump #1	65A7	0:00:00	0:00:00	0:00:00	0					
1/17/2011	L.S. #65	Pump #2	65A8	0:04:52	11:52:58	0:02:10	327	11:52:58	712.97	247	176102.77	122.29
1/18/2011	L.S. #65	Pump #1	65A7	0:00:00	0:00:00	0:00:00	0					
1/18/2011	L.S. #65	Pump #2	65A8	0:05:01	12:08:57	0:02:22	307	12:08:57	728.95	247	180050.65	125.04
1/19/2011	L.S. #65	Pump #1	65A7	0:00:00	0:00:00	0:00:00	0					
1/19/2011	L.S. #65	Pump #2	65A8	0:05:41	11:19:38	0:02:19	292	11:19:38	679.63	247	167869.43	116.58
1/20/2011	L.S. #65	Pump #1	65A7	0:00:00	0:00:00	0:00:00	0					
1/20/2011	L.S. #65	Pump #2	65A8	0:04:28	11:03:34	0:02:03	321	11:03:34	663.57	247	163900.97	113.82
1/21/2011	L.S. #65	Pump #1	65A7	0:00:00	0:00:00	0:00:00	0					
1/21/2011	L.S. #65	Pump #2	65A8	0:04:27	11:39:00	0:02:14	312	11:39:00	699.00	247	172653.00	119.90
1/22/2011	L.S. #65	Pump #1	65A7	0:00:00	0:00:00	0:00:00	0					
1/22/2011	L.S. #65	Pump #2	65A8	0:05:36	11:50:27	0:02:04	341	11:50:27	710.45	247	175481.15	121.86
1/23/2011	L.S. #65	Pump #1	65A7	0:00:00	0:00:00	0:00:00	0					
1/23/2011	L.S. #65	Pump #2	65A8	0:04:51	11:42:26	0:02:15	310	11:42:26	702.43	247	173501.03	120.49
1/24/2011	L.S. #65	Pump #1	65A7	0:00:00	0:00:00	0:00:00	0					
1/24/2011	L.S. #65	Pump #2	65A8	0:05:28	12:07:47	0:02:21	308	12:07:47	727.78	247	179762.48	124.84
1/25/2011	L.S. #65	Pump #1	65A7	0:00:00	0:00:00	0:00:00	0					
1/25/2011	L.S. #65	Pump #2	65A8	0:06:26	12:02:30	0:02:18	313	12:02:30	722.50	247	178457.50	123.93
1/26/2011	L.S. #65	Pump #1	65A7	0:00:00	0:00:00	0:00:00	0					
1/26/2011	L.S. #65	Pump #2	65A8	0:05:10	11:56:31	0:02:28	288	11:56:31	716.52	247	176979.62	122.90
1/27/2011	L.S. #65	Pump #1	65A7	0:00:00	0:00:00	0:00:00	0					
1/27/2011	L.S. #65	Pump #2	65A8	0:07:17	11:53:30	0:02:25	295	11:53:30	713.50	247	176234.50	122.39
1/28/2011	L.S. #65	Pump #1	65A7	0:00:00	0:00:00	0:00:00	0					
1/28/2011	L.S. #65	Pump #2	65A8	0:06:24	11:45:26	0:02:20	302	11:45:26	705.43	247	174242.03	121.00
1/29/2011	L.S. #65	Pump #1	65A7	0:00:00	0:00:00	0:00:00	0					
1/29/2011	L.S. #65	Pump #2	65A8	0:04:52	11:45:51	0:02:21	298	11:45:51	705.85	247	174344.95	121.07
1/30/2011	L.S. #65	Pump #1	65A7	0:00:00	0:00:00	0:00:00	0					
1/30/2011	L.S. #65	Pump #2	65A8	0:05:47	11:50:30	0:02:24	294	11:50:30	710.50	247	175493.50	121.87
1/31/2011	L.S. #65	Pump #1	65A7	0:03:29	0:03:29	0:03:29	1					
1/31/2011	L.S. #65	Pump #2	65A8	0:06:06	12:28:38	0:02:24	309	12:32:07	752.12	247	185772.82	129.01
2/1/2011	L.S. #65	Pump #1	65A7	0:00:48	0:00:48	0:00:48	1					

2/1/2011	L.S. #65	Pump #2	65A8	0:24:40	11:02:02	0:02:02	325	11:02:50	662.83	247	163719.83	113.69
2/2/2011	L.S. #65	Pump #1	65A7	0:04:39	0:22:48	0:02:32	9					
2/2/2011	L.S. #65	Pump #2	65A8	0:12:07	11:13:01	0:01:53	289	11:35:49	695.82	247	171866.72	119.35
2/3/2011	L.S. #65	Pump #1	65A7	2:01:41	2:06:32	0:42:10	3					
2/3/2011	L.S. #65	Pump #2	65A8	0:13:27	12:21:18	0:01:22	216	14:27:50	867.83	247	214354.83	148.86
2/4/2011	L.S. #65	Pump #1	65A7	0:00:00	0:00:00	0:00:00	0					
2/4/2011	L.S. #65	Pump #2	65A8	0:03:10	7:07:43	0:01:11	357	7:07:43	427.72	247	105646.02	73.37
2/5/2011	L.S. #65	Pump #1	65A7	0:00:00	0:00:00	0:00:00	0					
2/5/2011	L.S. #65	Pump #2	65A8	0:02:46	7:09:53	0:01:07	382	7:09:53	429.88	247	106181.18	73.74
2/6/2011	L.S. #65	Pump #1	65A7	0:00:00	0:00:00	0:00:00	0					
2/6/2011	L.S. #65	Pump #2	65A8	0:03:20	7:24:51	0:01:11	373	7:24:51	444.85	247	109877.95	76.30
2/7/2011	L.S. #65	Pump #1	65A7	0:00:00	0:00:00	0:00:00	0					
2/7/2011	L.S. #65	Pump #2	65A8	0:03:49	6:57:15	0:01:05	383	6:57:15	417.25	247	103060.75	71.57
2/8/2011	L.S. #65	Pump #1	65A7	0:00:00	0:00:00	0:00:00	0					
2/8/2011	L.S. #65	Pump #2	65A8	0:03:44	6:57:38	0:01:11	351	6:57:38	417.63	247	103155.43	71.64
2/9/2011	L.S. #65	Pump #1	65A7	0:00:00	0:00:00	0:00:00	0					
2/9/2011	L.S. #65	Pump #2	65A8	0:10:05	6:42:02	0:01:08	353	6:42:02	402.03	247	99302.23	68.96
2/10/2011	L.S. #65	Pump #1	65A7	0:00:00	0:00:00	0:00:00	0					
2/10/2011	L.S. #65	Pump #2	65A8	0:04:06	5:27:04	0:00:55	352	5:27:04	327.07	247	80785.47	56.10
2/11/2011	L.S. #65	Pump #1	65A7	0:00:00	0:00:00	0:00:00	0					
2/11/2011	L.S. #65	Pump #2	65A8	0:03:37	4:36:26	0:00:44	371	4:36:26	276.43	247	68279.03	47.42
2/12/2011	L.S. #65	Pump #1	65A7	0:00:00	0:00:00	0:00:00	0					
2/12/2011	L.S. #65	Pump #2	65A8	0:01:51	4:30:32	0:00:45	354	4:30:32	270.53	247	66821.73	46.40
2/13/2011	L.S. #65	Pump #1	65A7	0:00:00	0:00:00	0:00:00	0					
2/13/2011	L.S. #65	Pump #2	65A8	0:03:28	4:12:57	0:00:41	365	4:12:57	252.95	247	62478.65	43.39
2/14/2011	L.S. #65	Pump #1	65A7	0:00:00	0:00:00	0:00:00	0					
2/14/2011	L.S. #65	Pump #2	65A8	0:02:45	4:22:16	0:00:44	357	4:22:16	262.27	247	64779.87	44.99
2/15/2011	L.S. #65	Pump #1	65A7	0:00:00	0:00:00	0:00:00	0					
2/15/2011	L.S. #65	Pump #2	65A8	0:04:17	3:57:17	0:00:42	332	3:57:17	237.28	247	58608.98	40.70
2/16/2011	L.S. #65	Pump #1	65A7	0:00:00	0:00:00	0:00:00	0					
2/16/2011	L.S. #65	Pump #2	65A8	0:02:03	3:53:45	0:00:38	362	3:53:45	233.75	247	57736.25	40.09
Priority Lining Completed in Area												
2/17/2011	L.S. #65	Pump #1	65A7	0:00:00	0:00:00	0:00:00	0					
2/17/2011	L.S. #65	Pump #2	65A8	0:06:05	4:05:49	0:00:38	379	4:05:49	245.82	247	60716.72	42.16
2/18/2011	L.S. #65	Pump #1	65A7	0:00:00	0:00:00	0:00:00	0					
2/18/2011	L.S. #65	Pump #2	65A8	0:02:04	4:26:04	0:00:41	381	4:26:04	266.07	247	65718.47	45.64
2/19/2011	L.S. #65	Pump #1	65A7	0:00:00	0:00:00	0:00:00	0					
2/19/2011	L.S. #65	Pump #2	65A8	0:02:13	4:29:14	0:00:42	376	4:29:14	269.23	247	66500.63	46.18
2/20/2011	L.S. #65	Pump #1	65A7	0:00:00	0:00:00	0:00:00	0					
2/20/2011	L.S. #65	Pump #2	65A8	0:02:58	4:17:22	0:00:40	377	4:17:22	257.37	247	63569.57	44.15
2/21/2011	L.S. #65	Pump #1	65A7	0:00:00	0:00:00	0:00:00	0					
2/21/2011	L.S. #65	Pump #2	65A8	0:01:50	4:31:13	0:00:42	380	4:31:13	271.22	247	66990.52	46.52
2/22/2011	L.S. #65	Pump #1	65A7	0:00:00	0:00:00	0:00:00	0					
2/22/2011	L.S. #65	Pump #2	65A8	0:02:14	4:42:08	0:00:45	376	4:42:08	282.13	247	69686.93	48.39
2/23/2011	L.S. #65	Pump #1	65A7	0:00:00	0:00:00	0:00:00	0					
2/23/2011	L.S. #65	Pump #2	65A8	0:01:59	4:35:23	0:00:43	383	4:35:23	275.38	247	68019.68	47.24
2/24/2011	L.S. #65	Pump #1	65A7	0:00:00	0:00:00	0:00:00	0					
2/24/2011	L.S. #65	Pump #2	65A8	0:02:30	4:26:50	0:00:41	390	4:26:50	266.83	247	65907.83	45.77
2/25/2011	L.S. #65	Pump #1	65A7	0:00:00	0:00:00	0:00:00	0					
2/25/2011	L.S. #65	Pump #2	65A8	0:02:08	4:19:07	0:00:40	387	4:19:07	259.12	247	64001.82	44.45
2/26/2011	L.S. #65	Pump #1	65A7	0:00:00	0:00:00	0:00:00	0					
2/26/2011	L.S. #65	Pump #2	65A8	0:01:44	4:23:40	0:00:43	367	4:23:40	263.67	247	65125.67	45.23
2/27/2011	L.S. #65	Pump #1	65A7	0:00:00	0:00:00	0:00:00	0					
2/27/2011	L.S. #65	Pump #2	65A8	0:02:12	4:15:12	0:00:40	378	4:15:12	255.20	247	63034.40	43.77
2/28/2011	L.S. #65	Pump #1	65A7	0:00:00	0:00:00	0:00:00	0					
2/28/2011	L.S. #65	Pump #2	65A8	0:02:06	4:00:39	0:00:38	379	4:00:39	240.65	247	59440.55	41.28
3/1/2011	L.S. #65	Pump #1	65A7	0:00:00	0:00:00	0:00:00	0					
3/1/2011	L.S. #65	Pump #2	65A8	0:02:04	4:13:55	0:00:39	381	4:13:55	253.92	247	62717.42	43.55
3/2/2011	L.S. #65	Pump #1	65A7	0:00:00	0:00:00	0:00:00	0					
3/2/2011	L.S. #65	Pump #2	65A8	0:02:44	4:05:04	0:00:39	370	4:05:04	245.07	247	60531.47	42.04
3/3/2011	L.S. #65	Pump #1	65A7	0:00:00	0:00:00	0:00:00	0					
3/3/2011	L.S. #65	Pump #2	65A8	0:02:07	4:15:24	0:00:43	351	4:15:24	255.40	247	63083.80	43.81

Total Volume before Lining	7818735.60
Total Daily Flow before Lining	5429.68
Average Daily Flow Before Lining	115.53

Total Volume after Lining (gpd)	**965045.47**
Total Daily Flow after Lining (gpm)	**670.17**
Average Daily Flow after Lining (gpm)	**44.68**

Appendix B

Connection Pressures

Downloaded Data - Wednesday, March 24, 2010

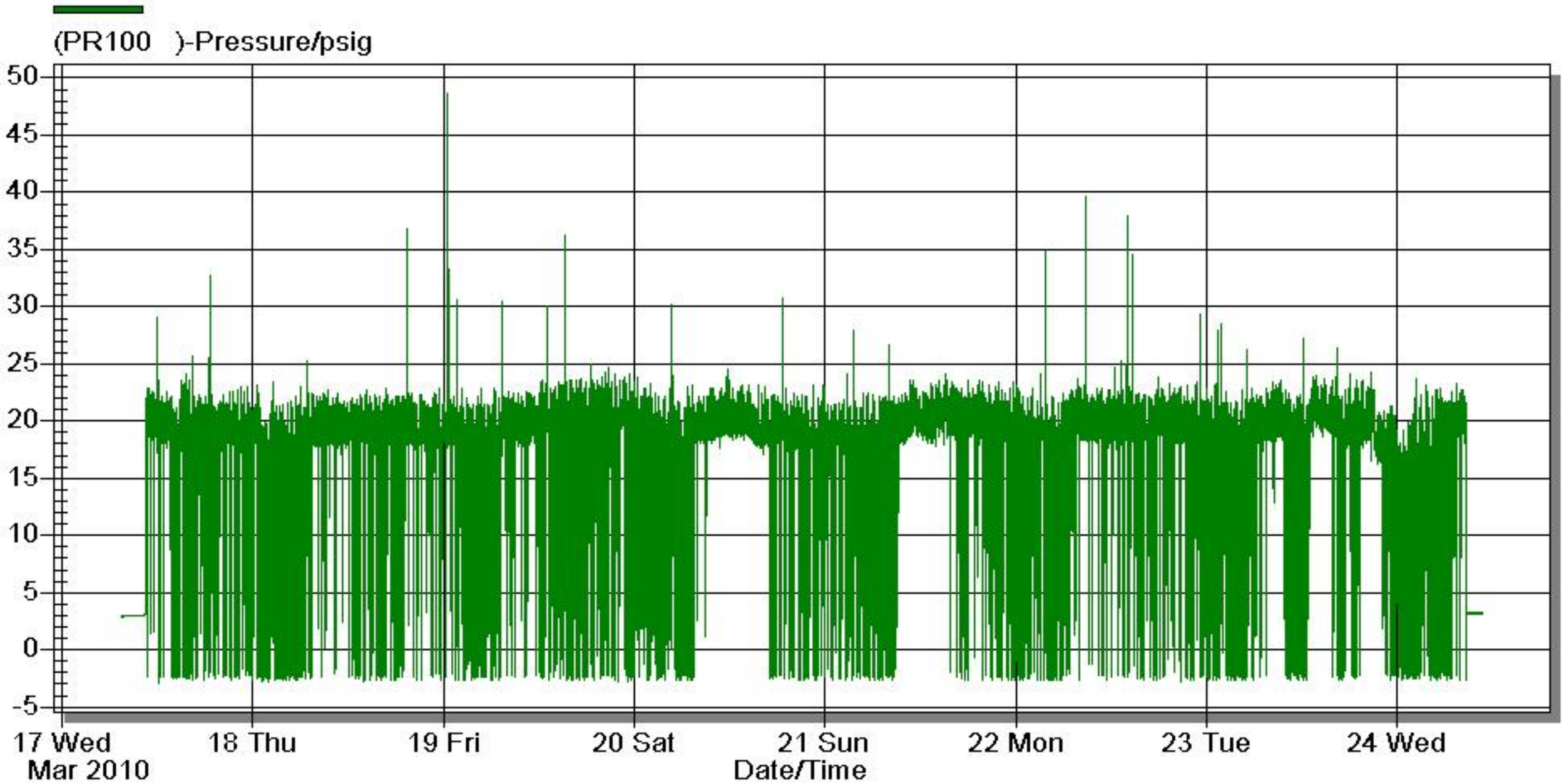

Appendix C

EP-1115

SYSTEM

REQUIREMENTS

EP-1100 SERIES APPLICATIONS

Multiple Applications

The EP-1100 Series keeps surfaces free of build-up and adds oxygen to:

- STORM WATER: Aerate and remove bio-organic build-up
- LIFT STATION: Clean lift station & recondition wastewater
- CLARIFIER: Aerate and keep free of build-up
- WWTP: Homogenize and oxygenate sludge pits

There are three different size EP-1100 models:
2" and 1.5" for solids handling and 1" for water applications *(see below)*.

STORM WATER

LIFT STATION

CLARIFIER

WWTP

Tap Discharge Main or Dedicated Pump

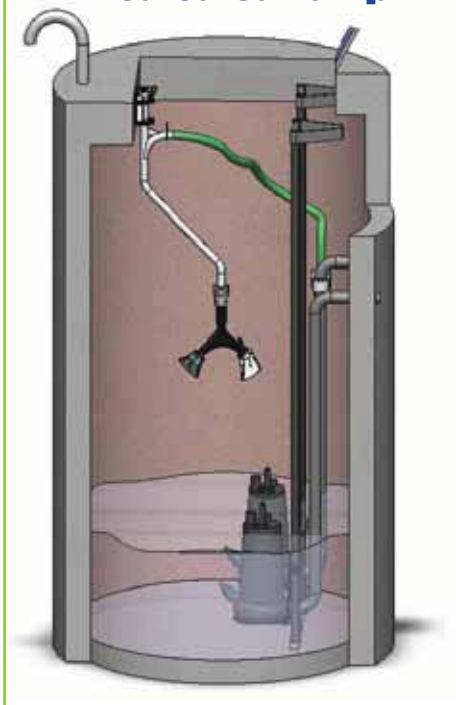

In addition to models that tap discharge mains, EP-1100-P series models include a dedicated grinder pump. These are used for low flow stations or where tapping the discharge main is not advised.

Lower Dosing Volume & Save Money

The EP-1100 Series systems provide an input for feeding chemical, organic, or biological augmentation materials.

High efficiency mixing within the EP and recycling back to the well lowers dosing volume, saving money.

Chemical Input Feed Point

EP-1100 SERIES SYSTEM REQUIREMENTS AND SPECIFICATIONS

System Overview		Water-Only Applications EP-1107	EP-1110	EP-1110-Pxxx (See Pump Systems, below)	EP-1115	EP-1115-Pxxx (See Pump Systems, below)	EP-1120	EP-1120-Pxxx (See Pump Systems, below)
Dual Output System, Patent Pending Head Assembly, Composite Head, Sealed Rotary Bearing Assembly, 316 Stainless steel		0.75" (19 mm)	1.0" (25mm)	1.0" (25 mm)	1.5" (38 mm)	1.5" (38 mm)	2.0" (51 mm)	2.0" (51 mm)
		EP-HA1107	EP-HA1110	EP-HA1110	EP-HA1115	EP-HA1115	EP-HA1120	EP-HA1120
Mounting Bracket, Dual Camlock, Safety Rod, 316 Stainless Steel		EP-MB1315	EP-MB1315	EP-MB1315 (2)	EP-MB1315	EP-MB1315 (2)	EP-MB1320	EP-MB1320 (2)
Feed Mast, NPT thread, Lifting Handle, 1" Liquid Injection Port/Bolt		EP-FM1315	EP-FM1315	EP-FM1315 (2)	EP-FM1315	EP-FM1315 (2)	EP-FM1320	EP-FM1320 (2)
Pump, Centrifugal Grinder, 2 or 5 hp (see below)		None	None	1	None	1	None	1
Control Panel & Timer (see below)		None	None	1	None	1	None	1
Wastewater Application		Not Applicable	Must use dedicated grinder pump	Dedicated pump	Single or dual discharge main tap	Dedicated pump	Single or dual discharge main tap	Dedicated pump
Water-Only Application		Yes	Yes	Not Applicable	Not Applicable	Not Applicable	Not Applicable	Not Applicable
System Operating Requirements								
Flow: gallons / minute at ≥ 4 psi, 25 rpm	1 gpm = 3.8 lpm	35 gpm	49 gpm	49 gpm	72 gpm	72 gpm	86 gpm	86 gpm
Flow: gallons / minute at ≥ 4 psi, 18 rpm	1 gpm = 3.8 lpm	35 gpm	46 gpm	46 gpm	67 gpm	67 gpm	79 gpm	79 gpm
Optimum Rotational Speed		25 rpm	25 rpm	25 rpm	25 rpm	25 rpm	25 rpm	25 rpm
Pump Horsepower	*Pump part of system	≥ 2 hp	≥ 2 hp	2 hp*	≥ 5 hp	5 hp*	≥ 20 hp	5 hp*
Pump Run Time Minimum per Day		≥ 5%	≥ 5%	≥ 5%	≥ 5%	≥ 5%	≥ 5%	≥ 5%
Discharge Main Diameter	1 inches = 25.4 mm	≥ 1 inches	≥ 2 inches	Not Applicable	≥ 4 inches	Not Applicable	≥ 8 inches	Not Applicable
Optimum / Min. Position above High Float	1 foot = 0.31M	4 feet / 1 foot	4 feet / 1 foot	4 feet / 1 foot	4 feet / 1 foot	4 feet / 1 foot	4 feet / 1 foot	4 feet / 1 foot
Wet Well Minimum Diameter Required	(feet)	≥6	≥6	≥6	≥6	≥6	≥8	≥8
EP-1100 Systems with Dedicated Pump		EP-1110-P221 EP-1115-P221	EP-1110-P223	EP-1120-P521	EP-1115-P523 EP-1120-P523	EP-1115-P543 EP-1120-P543	EP-HA1115 EP-HA1120	EP-MB1315 EP-MB1320 / EP-FM1315 EP-FM1320
Pump, Control-Timer Part Number		ACP-221	ACP-223	ACP-521	ACP-523	ACP-543		
Centrifugal Grinder Pump: Horsepower		2 hp	2 hp	5 hp	5 hp	5hp		
Input Voltage, Phase		208-220 VAC, 1 Ø	230 VAC, 3 Ø	208-220 VAC, 1 Ø	230 VAC, 3 Ø	460 VAC, 3 Ø		

Anue Water Technologies, Inc.
USA, CA: 1-760-476-9090 www.AnueWater.com AUS, QLD: +61(1)300-750-560

Appendix D

Pump Rating

PERFORMANCE CURVE

PRODUCT	TYPE
NP3153.181	HT

DATE	PROJECT	CURVE NO	ISSUE
2011-03-08		63-466-00-3050	1

	1/1-LOAD	3/4-LOAD	1/2-LOAD
POWER FACTOR	0.79	0.72	0.60
EFFICIENCY	87.0 %	87.5 %	0.60
MOTOR DATA	---	---	---

RATED POWER	12	hp
STARTING CURRENT ...	102	A
RATED CURRENT ...	16	A
RATED SPEED	1760	rpm
TOT.MOM.OF INERTIA ...	0.074	kgm2
NO. OF BLADES	2	

IMPELLER DIAMETER: 230 mm

MOTOR #	STATOR	REV
21-13-4AA	05YSER	11

FREQ.	PHASES	VOLTAGE	POLES
60 Hz	3	460 V	4

GEARTYPE	RATIO
---	---

COMMENTS

INLET/OUTLET: -/ 4 inch

IMP. THROUGHLET: ---

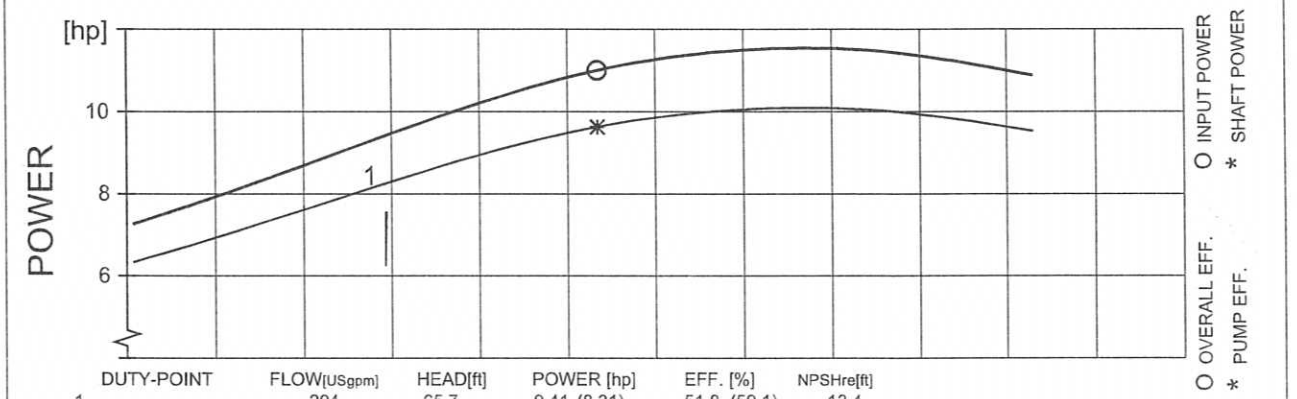

DUTY-POINT	FLOW[USgpm]	HEAD[ft]	POWER [hp]	EFF. [%]	NPSHre[ft]
1	294	65.7	9.41 (8.31)	51.8 (59.1)	13.4
B.E.P.	534	48.4	11.0 (9.6)	59.5 (68.0)	13.5

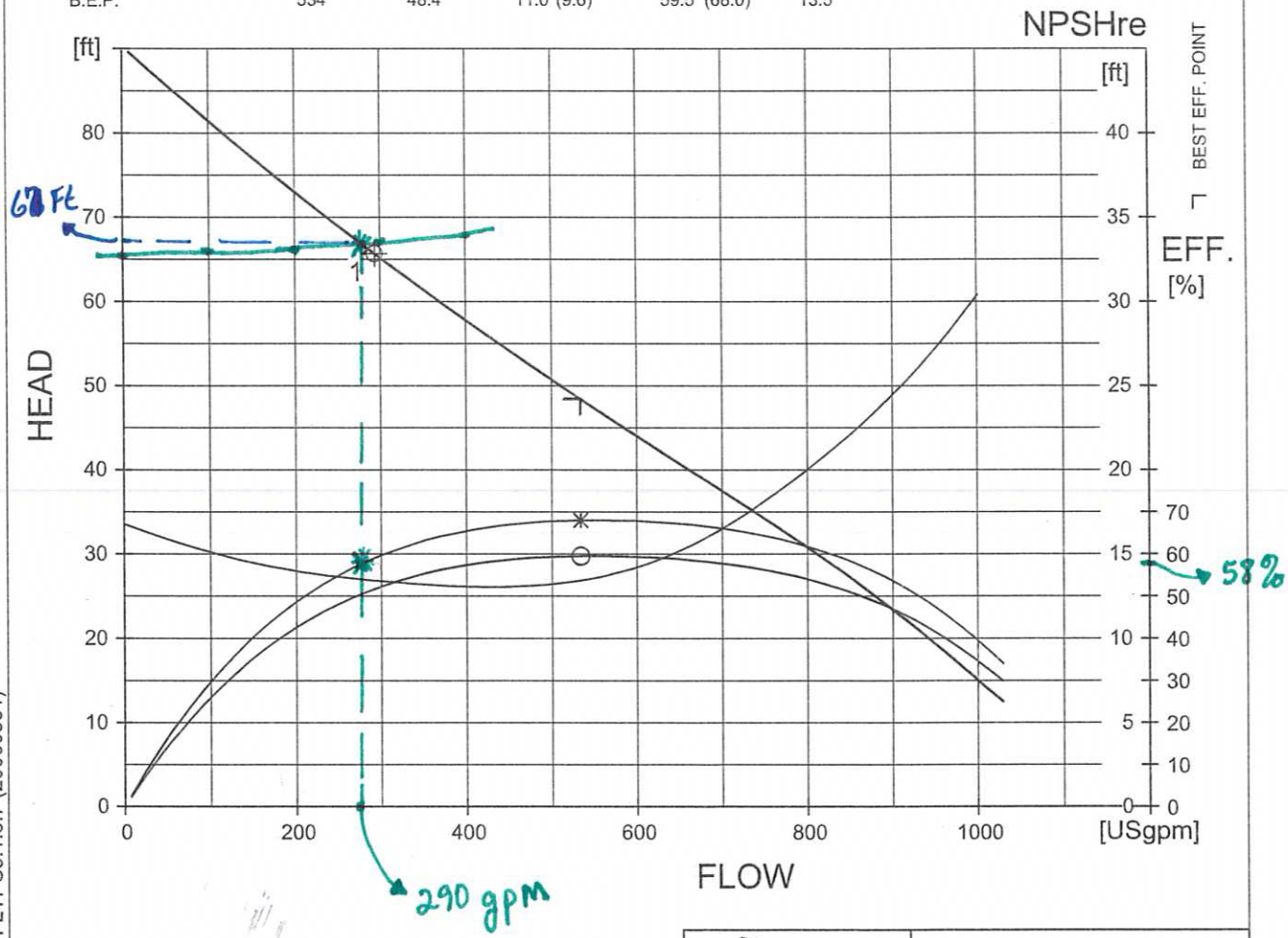

NPSHre = NPSH3% + min. operational margin

Performance with clear water and ambient temp 40 °C

FLYPS3.1.5.7 (20060531)

HI B Curve

Rating

Frequency	**60** Hz	Product	**3153 . 181**	Issue	**1**
Phases	**3**	Motor #	**21-13-4AA**	# of Starts/Hr	**15**
Poles	**4**	Rated power	**12.0** hp	Issue date	
Approval		Installations	**PSTZ**	Valid from	**12/28/2004**
-	**N**	Type of duty	**S1**	Status	**APPR**

Rtd. amb. temp. **40** ° C / **104** ° F

	Alternative 1	*Alternative 2*		
Voltage	**460** V	**230** V	Stator variant	**05**
Connection	**YSER**	**Y//**	Speed	**1760** r/min
Rtd. Curr.	**16.0** A	**33.0** A	Module	**134**
Starting current	**102.0** A	**204.0** A	Motor issue	**11**
Power factor	**0.79**	**0.79**		
NEMA code letter	**H**	**H**		

Warm liquid data Note! Reduced rated power

Rtd. amb. temp.	**70** ° C / **158** ° F	° C /	° F
Rtd. Curr. (1)	**15.0** A	A	
Rtd. Curr. (2)	**30.0** A	A	
Max input power	**9.4** kW	kW	

Flygt

ITT Industries

12 HP

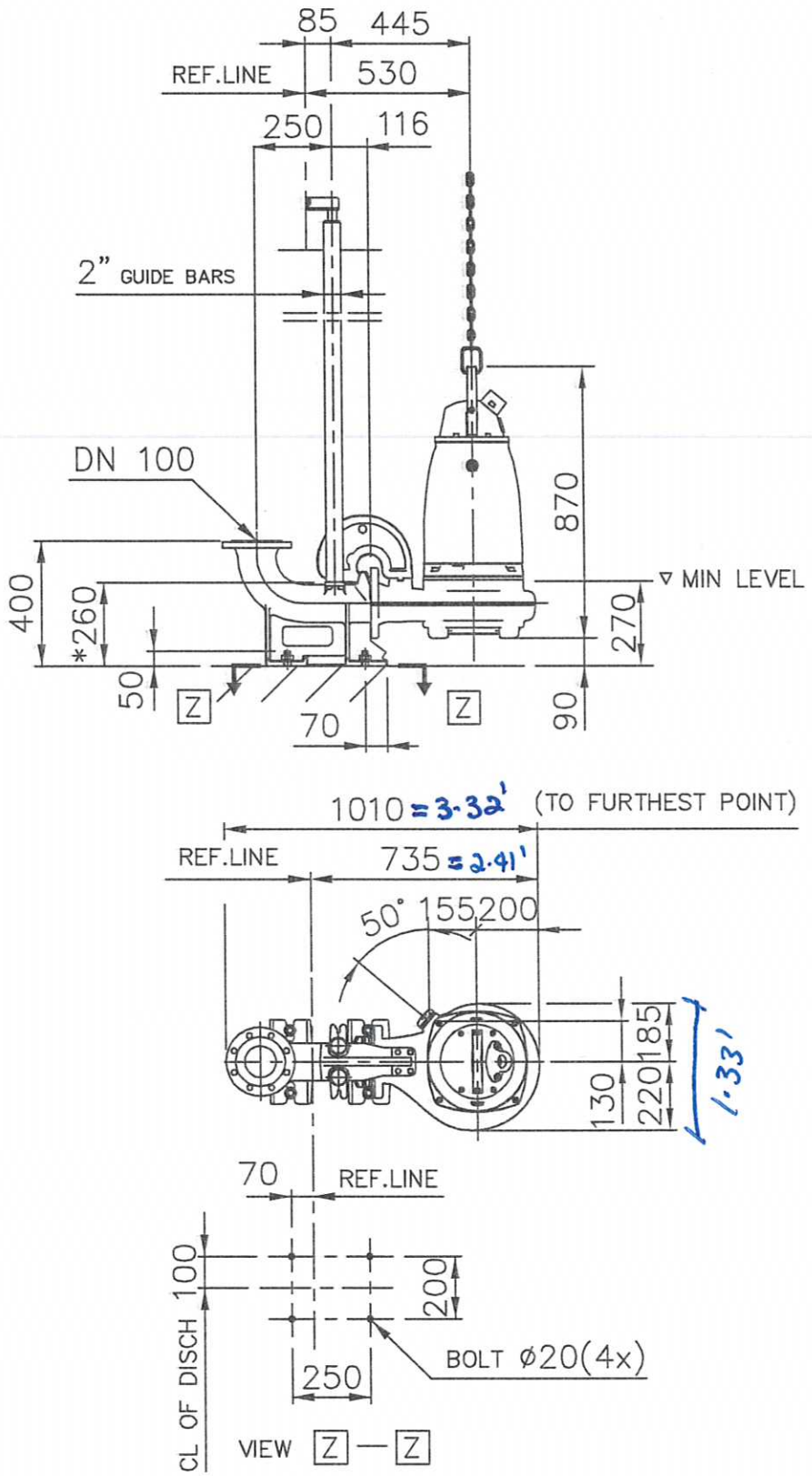

* DIMENSION TO ENDS OF GUIDE BARS

Weight (kg)	
Pump	Stand
210	42

AUTOCAD DRAWING	Denomination: Dimensional drwg NP,FP 3153 HT DN 100	Drawn by NK	Checked by SB	Date 081013
		Scale 1:20		Reg no 5399
		6504500		11

Appendix E

Water Table Map

WATER TABLE MAP

Average Wet Season

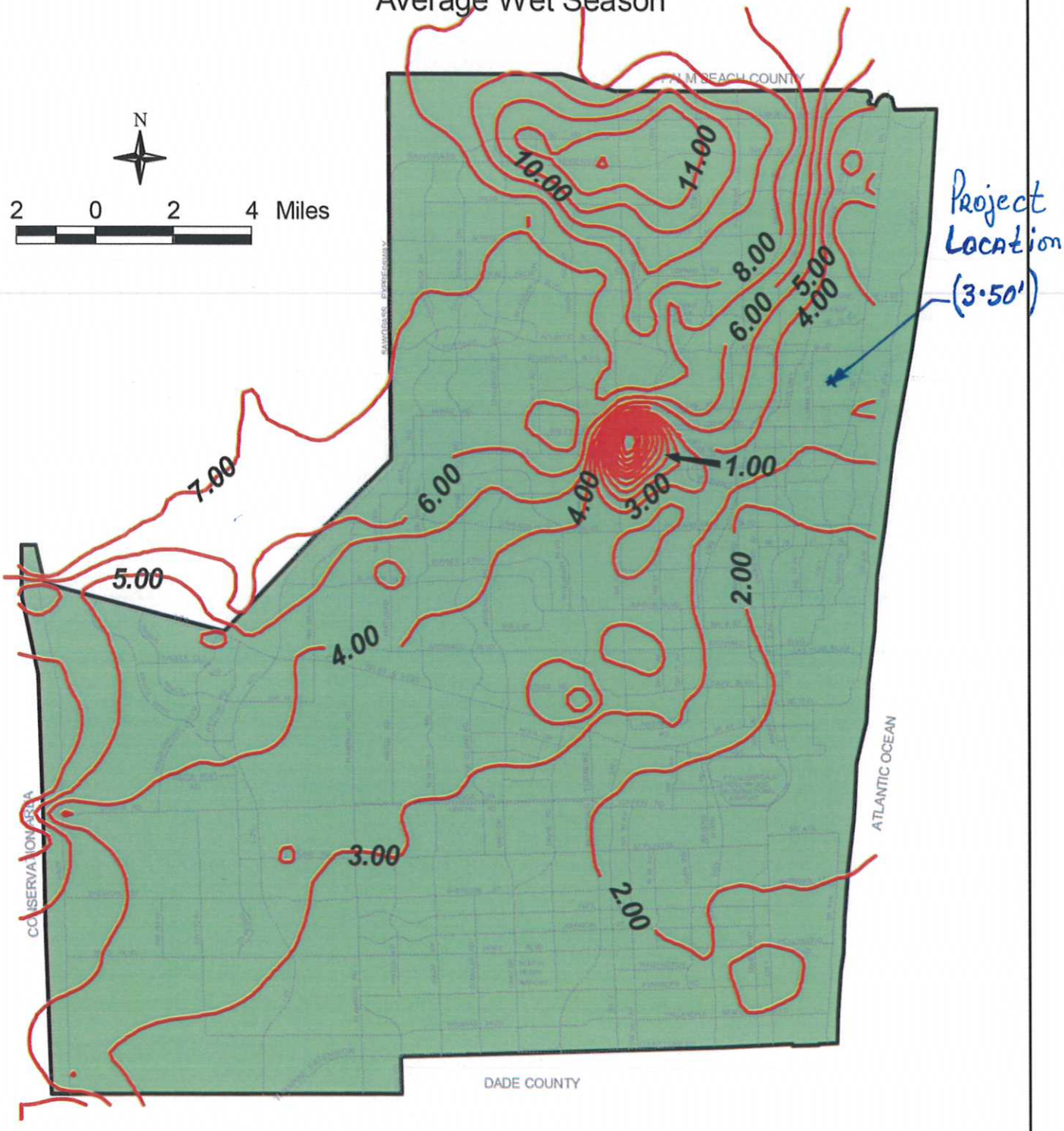

Broward County Office of Environmental Services Water Management Division

February 17, 2000

averagewet.apr

Appendix F

Site Plan

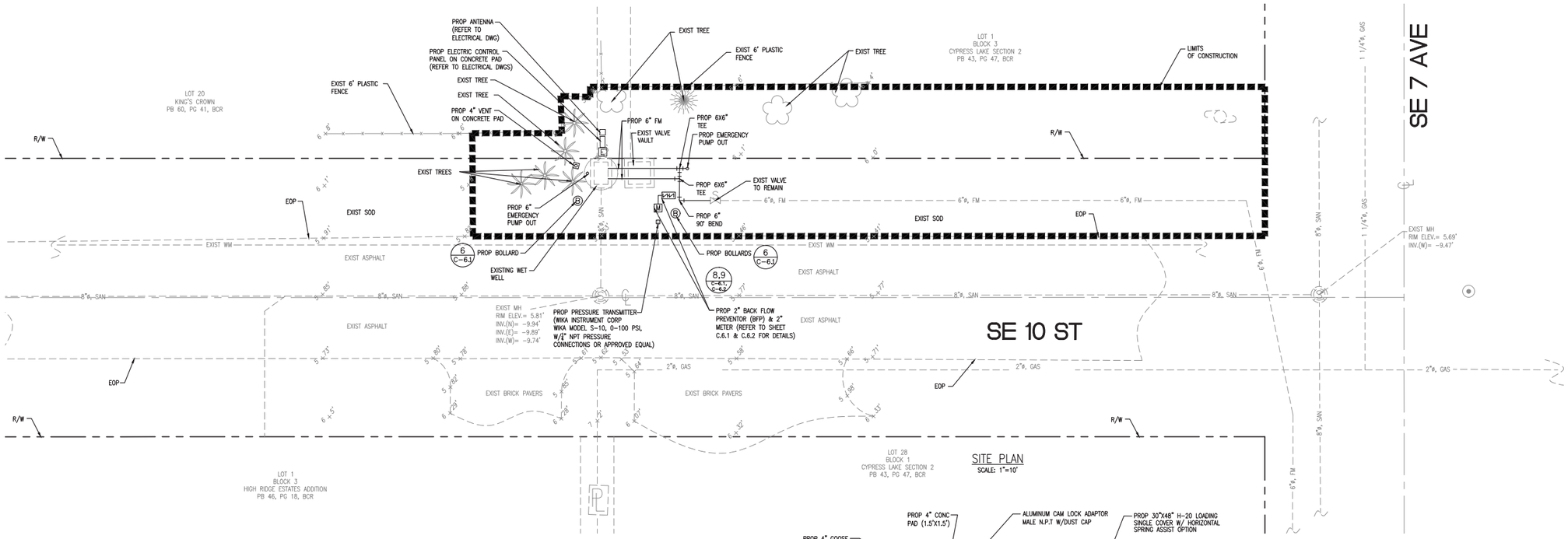

SITE PLAN
SCALE: 1"=10'

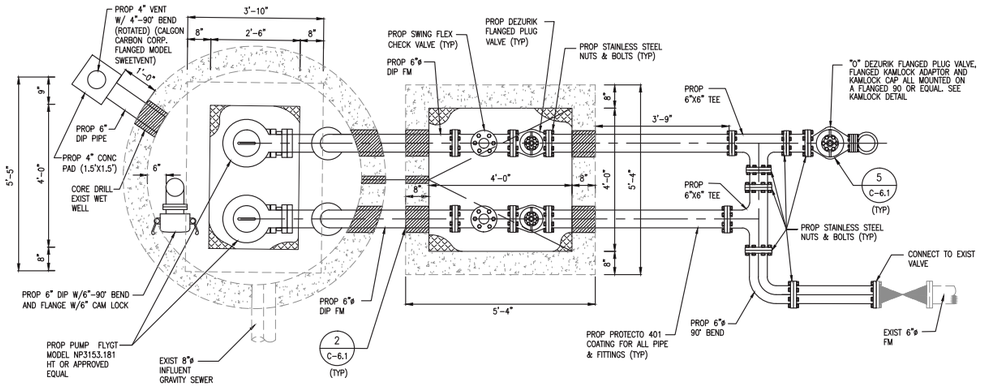

PLAN VIEW
SCALE: 1"=2'

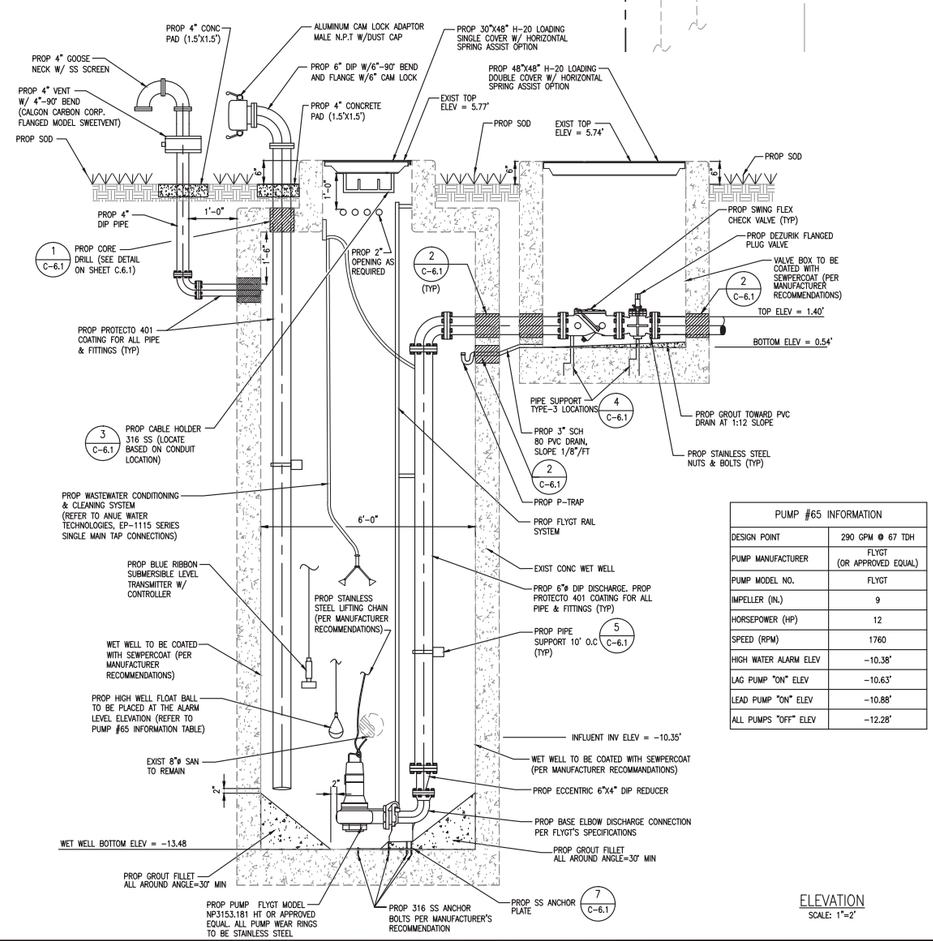

ELEVATION
SCALE: 1"=2'

PUMP #65 INFORMATION	
DESIGN POINT	290 GPM @ 67 TDH
PUMP MANUFACTURER	FLYGT (OR APPROVED EQUAL)
PUMP MODEL NO.	FLYGT
IMPELLER (IN.)	9
HORSEPOWER (HP)	12
SPEED (RPM)	1760
HIGH WATER ALARM ELEV	-10.38'
LAG PUMP "ON" ELEV	-10.63'
LEAD PUMP "ON" ELEV	-10.88'
ALL PUMPS "OFF" ELEV	-12.28'

KNOW WHAT'S BELOW ALWAYS CALL 811 BEFORE YOU DIG
It's fast. It's free. It's the law.
www.callsunshine.com

THESE PLANS ARE NOT FINAL CONSTRUCTION DOCUMENTS UNTIL APPROVALS BY ALL PERMITTING AND JURISDICTIONAL AGENCIES HAVE BEEN OBTAINED. CONSTRUCTION WITHOUT SAID APPROVALS IS AT SOLE RISK TO CONTRACTOR. ENGINEER IS NOT RESPONSIBLE FOR CHANGES MADE DUE TO PERMITTING/JURISDICTIONAL DIRECTIONS, IF CONSTRUCTION PROCEEDS WITHOUT DUE AUTHORIZATION/APPROVALS.

pompano beach
Florida's Warmest Welcome

CITY OF POMPANO BEACH, BROWARD COUNTY, FL

1201 NE 5th AVE
POMPANO BEACH, FL 33060

EAC Consulting, Inc.
CA # 7011
815 NW 57th AVE, SUITE 402
MIAMI, FL 33126
(305) 265-5400

PUMP STATION #65 REHABILITATION

100% SUBMITTAL

DRAWING ISSUED

SUBMITTAL	No.	DESCRIPTION	DATE	BY
REVIEW 60 %			04/08/11	GM
REVIEW 90 %			-/-/-	
REVIEW 100 %			08/12/11	GM
PERMIT	ø			

REVISION	No.	DESCRIPTION	DATE	BY

DESIGNED : JA | CHECKED : RD/GM
DRAWN : JA/AR | FINAL CHECK BY : GM

GREGORY A. MENDEZ, P.E.
STATE OF FLORIDA - LICENSE NO. 64718

DATE : AUGUST, 2011 | SCALE : AS SHOWN

DWG TITLE: SITE PLAN

DWG No. C.5.0

(NOT PART OF BROWARD COUNTY NOTES, NOR APPROVAL) DRAWING SCALE SHOWN CORRESPONDS TO PLOT SIZE OF 24"X36", IF THIS DRAWING IS PLOTTED ON OTHER SIZE SHEET ENGINEER OF RECORD DOES NOT WARRANT ACCURACY OF DRAWING SCALE.