City of Pompano Beach, Purchasing Division
1190 N.E. 3rd Avenue, Building C
Pompano Beach, Florida, 33060

September 11, 2012

ADDENDUM #2, BID H-24-12
REHABILITATION OF WASTEWATER PUMP STATION NO. 81

To Whom It May Concern,

The deadline for written questions is extended to 5:00 p.m., Friday, September 14.

Please review the following responses to requests for information.

Q1: Control Panel – Plans indicate we are supposed to use Champion Controls. However there seems to be conflicts between sole source pump supplier and sole source panel supplier. Can an equal for the control panel be used?

A1: Bids will be considered for approved equals to the panel specified. Detailed information regarding any proposed substitute must be submitted to the City for review by September 14.

Q2: The City has received several requests to approve pumps as equal to the pumps specified in the bid.

A2: Detailed information, including model/part numbers, etc., for any proposed substitute pump must be submitted to the City for review by September 14. The City's consultant prepared a flow analysis of the pump station, and this document is attached for your reference.

The remainder of the solicitation is unchanged at this time.

Acknowledge receipt of this Addendum in the area provided on Page 14 of the bid.

Very truly yours,

Leeta Hardin
General Services Director

enclosure

cc: website
file

City of Pompano Beach

Pump Station #81 Rehabilitation

100 % Pump Station #81 Calculations
May 2012

ENGINEERING

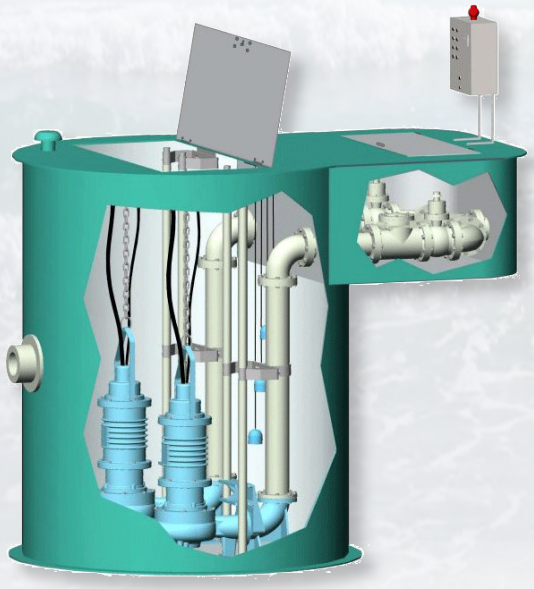

EXCELLENCE

Prepared By:

EAC Consulting, Inc.
WWW.EACCONSULT.COM
CA# 7011

815 NW 57th Avenue
Suite 402
Miami, FL 33126

Gregory A, Mendez, P.E.
State of Florida
P.E. 64718

Table of Contents

Introduction	2
Peak Flow Analysis and Assumptions	2
Pump Calculations	4
Flotation Calculations	8
Pump Calculations Summary of Results	11

List of Appendices

Appendix A – Pump Run Time & Average Daily Flow

Appendix B – Connection Pressures

Appendix C – EP-1115 System Requirements

Appendix D – Pump Rating & CAD Drawing

Appendix E – Water Table Map

Appendix F – Site Plan

Introduction

The services of EAC Consulting, Inc. were retained for the rehabilitation of the City of Pompano Beach's Pump Station, Pump Station #81, which is located at NW 18th street and NW 2nd Terrace. Pump Station #81 primarily serves a residential community. EAC, in coordination with the City, was tasked to replace the pump station's outdated parts and design a new pump station capable of handling the current peak flows. The rehabilitation includes replacement of the existing pumps and electrical components as well as structural modifications.

The new submersible pumps shall have the capability to operate as a duplex system and be designed to accommodate a peak flow based upon average daily flow multiplied by a peaking factor adopted from Broward County. Complimentary electrical components shall include an upgrade to the electrical panel, a SCADA system, emergency alarms, time lapse meters and an emergency generator connection. The structural modifications shall include the replacement of existing grouts and new wall penetration modifications in order to facilitate the installation of a new 8" force main. Ultimately, the rehabilitation of Pump Station #81 is designed to provide service for a new peak flow while adhering to Broward County's criteria of an 8 hour per day maximum average running time for the pump station.

Peak Flow Analysis and Assumptions:

As previously mentioned, Pump Station #81 was designed to accommodate a peak flow based upon average daily flow multiplied by a peaking factor obtained from Broward County. The approximated average daily flow, $Q_{Avg.}$, was derived based on the existing run times provided by the City of Pompano Beach during the 365 day time period between 3/1/09 and 3/1/10 and existing flow rates gathered from a drawdown test performed by the City of Pompano Beach forces (refer to Appendix A). Average daily flow was determined as follows:

$$Q_{Avg.} = (\sum \text{Sum } (RT \times Q_{Rate} \div 24 \div 60)) \div 365$$

Where: RT = Run Time (min)

Q_{Rate} = Existing Pump Flow Rate (gpm)

24 = 24 (hrs)

60 = 60 (min)

365 = 365 (days)

Peak flow was determined as follows:

$$Q_{peak} = Q_{Avg.} \times 3.8 \text{ [1]}$$

Where: Q_{peak} = Peak flow (gpm)

$Q_{Avg.}$ = Average daily flow (gpm)

[1] Adopted Broward County peaking factor

The average daily flow discharging into Pump Station #81 is approximately 110.10 gpm. The resulting peak flow is 418.38 gpm. However, an additional 67 gpm, resulting in a total peak flow of 485.38 gpm, was added to the peak flow in order to account for EP-1115 (from Anue Water Technologies), a system that connects to the discharge pipes to allow cleansing of the wet well.

PUMP STATION #81 REHABILITATION
PUMP CALCULATIONS

1. Demand Estimation

Information provided by City of Pompano Beach : 762 Parcels

Average Flow GPM	Peak Factor	Peak Flow GPM
110.10	3.8	418.38
	Total	418.38

EP-1115 SYSTEM REQUIREMENTS = 67.00

Total Peak Demand = **485.38**

e Peaking facor was obtained from Broward County guidelines = **3.8**
For determining ability to provide potable water and sanitary sewer service
Table 8 - Sanitary Sewer Peaking Factors

2. Equivalent Length

8-inch pipe within wet well and valve vault connecting to existing 8-inch force main

System Components	Equivalent Length of Components	No. of Components	Equivalent Length (ft)
Straight pipe	37	1	37
90˚ Bends	9.8	2	19.6
Plug valve	2.7	1	2.7
Check valve	74	1	74
Tee	3.9	1	3.9
		Total	**137**

3. Calculating Inflow/Infiltration (I/I)

It is already included in the average daily flow

4. Develop System Head Curve

Equivalent Length of 8-inch pipe connecting to existing 8-inch Force Main (ft) 137

Proposed Force main diameter (in) 8

Calculate static head (Distance b/w bottom of wet well and Discahrge Crown of pipe elev.) (ft)
11.13 - -3.10 = 14.23

Connection Pressure:

Max. connection Pressure (psi) = 26

Max. connection Pressure (ft) = **60.06**

Min. connection Pressure (psi) = 0

Min. connection Pressure (ft) = 0

5.1 - Develop System Head Curve at Maximum Connection Pressure as follows:

c-factor	gpm	Size (in)	length (ft)	Friction loss (ft)	Static Head (ft)	Max FM Pressure	Total Head
100	0	8	137	0.00	14.23	60.06	**74.29**
100	100	8	137	0.06	14.23	60.06	**74.35**
100	200	8	137	0.21	14.23	60.06	**74.50**
100	300	8	137	0.44	14.23	60.06	**74.73**
100	400	8	137	0.75	14.23	60.06	**75.04**
100	485.38	8	137	1.07	14.23	60.06	**75.36**
100	500	8	137	1.14	14.23	60.06	**75.43**
100	600	8	137	1.59	14.23	60.06	**75.88**
100	700	8	137	2.12	14.23	60.06	**76.41**
100	800	8	137	2.71	14.23	60.06	**77.00**
100	900	8	137	3.37	14.23	60.06	**77.66**
100	1000	8	137	4.09	14.23	60.06	**78.38**
100	1100	8	137	4.88	14.23	60.06	**79.17**
100	1200	8	137	5.74	14.23	60.06	**80.03**
100	1300	8	137	6.65	14.23	60.06	**80.94**
100	1400	8	137	7.63	14.23	60.06	**81.92**
100	1500	8	137	8.67	14.23	60.06	**82.96**
100	1575	8	137	9.48	14.23	60.06	**83.77**
100	1600	8	137	9.77	14.23	60.06	**84.06**
100	1700	8	137	10.92	14.23	60.06	**85.21**
100	1800	8	137	12.14	14.23	60.06	**86.43**
100	1900	8	137	13.42	14.23	60.06	**87.71**
100	2000	8	137	14.76	14.23	60.06	**89.05**

5.2 - Develop System Head Curve at Minimum Connection Pressure as follows:

c-factor	gpm	Size (in)	length (ft)	Friction loss (ft)	Static Head (ft)	Min FM Pressure	Total Head
100	0	8	137	0.00	14.23	0.00	**14.23**
100	100	8	137	0.06	14.23	0.00	**14.29**
100	200	8	137	0.21	14.23	0.00	**14.44**
100	300	8	137	0.44	14.23	0.00	**14.67**
100	400	8	137	0.75	14.23	0.00	**14.98**
100	485.38	8	137	1.07	14.23	0.00	**15.30**
100	500	8	137	1.14	14.23	0.00	**15.37**
100	600	8	137	1.59	14.23	0.00	**15.82**
100	700	8	137	2.12	14.23	0.00	**16.35**
100	800	8	137	2.71	14.23	0.00	**16.94**
100	900	8	137	3.37	14.23	0.00	**17.60**
100	1000	8	137	4.09	14.23	0.00	**18.32**
100	1100	8	137	4.88	14.23	0.00	**19.11**
100	1200	8	137	5.74	14.23	0.00	**19.97**
100	1300	8	137	6.65	14.23	0.00	**20.88**
100	1400	8	137	7.63	14.23	0.00	**21.86**
100	1500	8	137	8.67	14.23	0.00	**22.90**
100	1575	8	137	9.48	14.23	0.00	**23.71**
100	1600	8	137	9.77	14.23	0.00	**24.00**
100	1700	8	137	10.92	14.23	0.00	**25.15**
100	1800	8	137	12.14	14.23	0.00	**26.37**
100	1900	8	137	13.42	14.23	0.00	**27.65**
100	2000	8	137	14.76	14.23	0.00	**28.99**

6. Wet Well Design

For the **FLYGT NP3171.181MT, 244 mm Impeller, 30 HP, 3-Phase (1760 RPM)**
meets **MAXIMUM** system curve at = 695 gpm TDH = 76 ft

Use 'D' =	72.00	inches
Use 'D' =	8.00	ft
Area of wet well =	50.27	ft^2
Pump Rate (Q) =	695.00	**gpm**
Design Pump Cycle Time (T) =	6.00	**minutes**
Storage @ Drawdown depth (V)=	1042.50	**gallons**
Storage @ Drawdown depth =	139.36	ft^3
Pump Drawdown depth =	2.8	**ft**

Per BCWWS

V = (Q * T) / 4

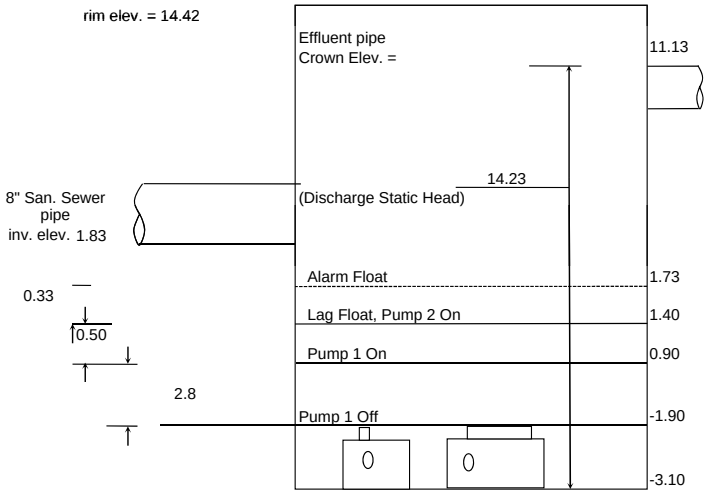

Rim Elevation	14.42
Effluent Invert	10.46
Effluent Crown	11.13
Influent Invert$_1$	1.83
Alarm Float	1.73
Lag Float, Pump 2 (	1.40
Pump 1 On	0.90
Pump Off	-1.90
Bottom of Well	-3.10

Note: Elevations shown are per 1929 NGVD Datum

7. Pump Cycle Times (Peak)

Pump Cycle time for Peak Flow (based upon **MAXIMUM** system curve):

Storage @ Drawdown depth (V) =	1042.50	gallons	
Pump Rate (Q) =	695.00	gpm	
Peak Flow into Wet Well (S) =	485.38	gpm	
Pump Run Time (Prun) =	4.97	minutes	Prun = V/(Q-S)
Pump Rest Time (Prest) =	2.15	minutes	Prest = V/S
Pump Cycle Time for Peak Flow (Tp) =	**7.12**	**minutes**	Cycle Time (T) = Prun + Prest
Number of Cycles Per hour (C)=	8	cycles	(approximate) $(60/T_P)$

8. Pump Cycle Times (Average)

Pump Cycle time for Average Flow (based upon **MAXIMUM** system curve):

Storage @ Drawdown depth (V) =	1042.50	gallons	
Pump Rate (Q) =	695.00	gpm	
Average Flow into Wet Well (S) =	110.10	gpm	Avg. Daily Flow
Pump Run Time (Prun) =	1.78	minutes	Prun = V/(Q-S)
Pump Rest Time (Prest) =	9.47	minutes	Prest = V/S
Pump Cycle Time for Average Flow (T_a) =	**11.25**	**minutes**	Cycle Time (T) = Prun + Prest
Number of Cycles Per hour (C)=	5	cycles	$(60/T_a)$

9. Pump Running Time (Average)

Number of Cycles Per hour (C)=	5	cycles	(approximate) $(60/T_a)$
Pump Run Time per Hour (RT) =	9.51	minutes	(Prun x C)
Pump Run Time per Day =	**3.80**	**Hours**	(RT x 24)/60

3.80 hr < 8hr/day; therefore adheres to Broward County criterion

10. System Requirements Verification:

8-inch pipe:

Flowrate:	695	gpm
Pipe Dia. :	8	in
Velocity:	4.4	ft/s

Meets Cleansing Velocity Req. : yes

Flotation Calculations:

Flotation calculations were performed to ensure that the existing wet well structure and the existing valve box could withstand any buoyant forces resulting from the ground water elevations on the site. The total volume of displaced water was calculated for each structure, including the bottom slab and structure walls below the water table. The resulting volume was then multiplied by the unit weight of water (62.4 lbs/ft^3) to obtain the total upward force. Next, the counteracting downward force was calculated based on the volume of the concrete in the structure and any soil weight above the lip of the bottom slab. As a conservative approach, the weight of the pumps, pipes, valves, fittings, and the angle of internal friction of the structure's backfill were not included in the calculations which would add significantly to the factor of safety. Refer to the table below and the supporting calculations for a summary of the flotation calculations.

Wet Well Floatation Calculations

Rim Elev =	14.42	ft	
Bottom Elev =	-3.10	ft	
Water Table Elev =	3.80	ft	
Ground Elev =	13.92	ft	
Wet Well Dia. =	8	ft	
Wet Well Wall =	1.00	ft	
Wet Well Height =	16.85	ft	(H_1)
Top Slab Diameter=	10.00	ft	(D_1)
Top Slab Thickness=	0.67	ft	
Bottom Slab Lip =	1.00	ft	
Bottom Slab Dia. =	12.00	ft	(D_2)
Bottom Slab Height=	1.00	ft	(H_2)
y_{water} =	62.4	lbs/ft ^{3}	
y_{soil} =	100	lbs/ft ^{3}	
y_{conc} =	150	lbs/ft ^{3}	
y_{sum} = y_{soil} - y_{water} =	37.6	lbs/ft ^{3}	

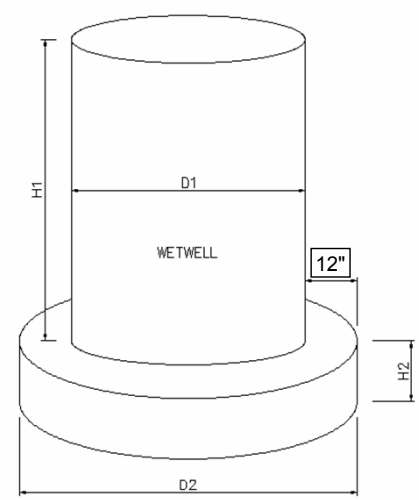

Volume (V) = $\frac{\pi \times (D)^2 \times H}{4}$

Upward Forces from Displaced Volume of Water:

Wet Well Displaced Volume =	541.65	ft^3
Bottom Slab Displaced Volume =	113.04	ft^3
Total Volume Displace (V_1) =	654.69	ft^3
F_{up} =	$V_1 \times y_{water}$	
F_{up} =	**40,852.66**	**lbs**

Total Downward force = weight of soil + weight of concrete

Weight of Soil:	Volume of Soil above water table (V_2) =	349.54	ft^3
	Volume of Soil below water table (V_3) =	238.33	ft^3
	F_{soil} =	$V_2 \times y_{soil} + V_3 \times y_{sum}$	
	F_{soil} =	43,915.54	lbs
Weight of Concrete :	Top Slab Concrete Volume =	52.60	ft^3
	Wet Well Conc. Volume =	476.18	ft^3
	Bottom Slab Conc. Volume=	113.04	ft^3
	Total Concrete Volume (V_3) =	641.82	ft^3
	F_{conc} =	$V_3 \times y_{conc}$	
	F_{conc} =	96,272.40	lbs

Total Downward Force = $F_{soil} + F_{conc}$

Total Downward Force = **140,187.94** **lbs**

Flotation Test = 140,187.94 > 40,852.66 Pass

Valve Box Flotation Calculations

Structure:	Valve Box	
Ground Elev	13.94	ft
Top Elev	14.44	ft
Bottom Elev	9.52	ft
Water Table	3.8	ft
Outer Length	7	ft
Outer Width	7	ft
Inner Length	4.9	ft
Inner Width	5.38	ft
Top Slab		
Length	7	ft
Width	7	ft
Height	1	ft
Bottom Slab		
Lip	0.5	ft
Length	8	ft
Width	8	ft
Height	1	ft

γ_{water} =	62.4	lbs/ft ^{3}
γ_{soil} =	100	lbs/ft ^{3}
γ_{conc} =	150	lbs/ft ^{3}
γ_{sum} = γ_{soil} - γ_{water} =	37.6	lbs/ft ^{3}

Volume (V) = Length x Width x Height

Upward Forces from Displaced Volume of Water:

Structure Displaced Volume =	0.00	ft^3
Bottom Slab Displaced Volume =	64.00	ft^3
Total Volume Displace (V_1) =	64.00	ft^3
F_{up} =	$V_1 \times \gamma_{water}$	
F_{up} =	**3,993.60**	**lbs**

Total Downward force = weight of soil + weight of concrete

Weight of Soil:	Volume of Soil above water table (V_2) =	152.10	ft^3
	Volume of Soil below water table (V_3) =	0.00	ft^3
	F_{soil} =	$V_2 \times \gamma_{soil} + V_3 \times \gamma_{sum}$	
	F_{soil} =	15,210.00	lbs
Weight of Concrete :	Top Slab Concrete Volume =	49.00	ft^3
	Structure Conc. Volume =	88.74	ft^3
	Bottom Slab Conc. Volume=	64.00	ft^3
	Total Concrete Volume (V_3) =	201.74	ft^3
	F_{conc} =	$V_3 \times \gamma_{conc}$	
	F_{conc} =	30,261.14	lbs
	Total Downward Force =	$F_{soil} + F_{conc}$	
	Total Downward Force =	**45,471.14**	**lbs**

Flotation Test = 45,471.14 > 3,993.60 Pass

Pump Calculations Summary of Results:

The rehabilitation design of pump station #81 was based on a calculated peak flow of 485.38 gpm which came from an average daily flow provided by the City of Pompano Beach multiplied by the Broward County peaking factor plus the required flow from EP-1115. Refer to the summary table below as well as the supporting calculations.

$Q_{Avg.}$, Average Daily Flow (gpm)	Q_{peak}, Peak Flow (gpm)	Average Pump Run Time/day	Pump Model and Horsepower	Operating Point
110.10	485.38	3.80 hours	FLYGT NP3171.181MT, 30 HP	695 gpm @ 76 TDH

Appendix A

Pump Run
Time

&

Average Daily
Flow

PUMP Activity Report with Station Filter 81

DATE	STATION NAME	POINT NAME	ADDRESS	MIN ONTIME	MAX ONTIME	TOTAL ONTIME	AVG ONTIME	TIMES ON	Run Time Per Day	Conversion (mn)	Flow out (GPM)	Volume (G)	Flow in (GPM)
3/1/2009	L.S. #81	Pump #1	81A7	0:00:34	0:01:02	1:24:08	0:00:47	106					
3/1/2009	L.S. #81	Pump #2	81A8	0:00:36	0:01:18	1:39:40	0:00:55	107	3:03:48	183.80	877	161192.60	111.94
3/2/2009	L.S. #81	Pump #1	81A7	0:00:34	0:00:58	1:19:18	0:00:44	108					
3/2/2009	L.S. #81	Pump #2	81A8	0:00:38	0:01:04	1:31:55	0:00:51	108	2:51:13	171.22	877	150157.02	104.28
3/3/2009	L.S. #81	Pump #1	81A7	0:00:32	0:00:54	1:14:33	0:00:43	102					
3/3/2009	L.S. #81	Pump #2	81A8	0:00:34	0:01:09	1:29:22	0:00:52	102	2:43:55	163.92	877	143754.92	99.83
3/4/2009	L.S. #81	Pump #1	81A7	0:00:30	0:00:56	1:14:47	0:00:43	102					
3/4/2009	L.S. #81	Pump #2	81A8	0:00:36	0:01:08	1:29:33	0:00:52	102	2:44:20	164.33	877	144120.33	100.08
3/5/2009	L.S. #81	Pump #1	81A7	0:00:34	0:00:56	1:16:27	0:00:44	104					
3/5/2009	L.S. #81	Pump #2	81A8	0:00:38	0:01:08	1:33:01	0:00:54	102	2:49:28	169.47	877	148622.27	103.21
3/6/2009	L.S. #81	Pump #1	81A7	0:00:32	0:01:14	1:17:16	0:00:45	102					
3/6/2009	L.S. #81	Pump #2	81A8	0:00:38	0:01:22	1:39:40	0:00:58	102	2:56:56	176.93	877	155170.53	107.76
3/7/2009	L.S. #81	Pump #1	81A7	0:00:34	0:01:06	1:27:32	0:00:48	109					
3/7/2009	L.S. #81	Pump #2	81A8	0:00:38	0:01:28	1:53:02	0:01:02	109	3:20:34	200.57	877	175896.97	122.15
3/8/2009	L.S. #81	Pump #1	81A7	0:00:32	0:01:02	1:27:14	0:00:49	106					
3/8/2009	L.S. #81	Pump #2	81A8	0:00:40	0:01:28	1:43:18	0:00:58	106	3:10:32	190.53	877	167097.73	116.04
3/9/2009	L.S. #81	Pump #1	81A7	0:00:34	0:01:02	1:23:04	0:00:47	104					
3/9/2009	L.S. #81	Pump #2	81A8	0:00:38	0:01:14	1:38:47	0:00:56	104	3:01:51	181.85	877	159482.45	110.75
3/10/2009	L.S. #81	Pump #1	81A7	0:00:34	0:01:12	1:23:02	0:00:47	104					
3/10/2009	L.S. #81	Pump #2	81A8	0:00:40	0:01:16	1:39:38	0:00:58	103	3:02:40	182.67	877	160198.67	111.25
3/11/2009	L.S. #81	Pump #1	81A7	0:00:34	0:03:04	1:23:42	0:00:48	103					
3/11/2009	L.S. #81	Pump #2	81A8	0:00:40	0:01:23	1:38:03	0:00:57	103	3:01:45	181.75	877	159394.75	110.69
3/12/2009	L.S. #81	Pump #1	81A7	0:00:36	0:01:02	1:17:05	0:00:47	98					
3/12/2009	L.S. #81	Pump #2	81A8	0:00:40	0:01:18	1:35:29	0:00:58	98	2:52:34	172.57	877	151340.97	105.10
3/13/2009	L.S. #81	Pump #1	81A7	0:00:36	0:01:00	1:19:19	0:00:48	99					
3/13/2009	L.S. #81	Pump #2	81A8	0:00:40	0:01:10	1:27:09	0:00:52	100	2:46:28	166.47	877	145991.27	101.38
3/14/2009	L.S. #81	Pump #1	81A7	0:00:38	0:01:04	1:24:40	0:00:49	103					
3/14/2009	L.S. #81	Pump #2	81A8	0:00:38	0:01:16	1:30:58	0:00:53	102	2:55:38	175.63	877	154030.43	106.97
3/15/2009	L.S. #81	Pump #1	81A7	0:00:36	0:01:06	1:28:32	0:00:51	104					
3/15/2009	L.S. #81	Pump #2	81A8	0:00:36	0:01:14	1:34:47	0:00:54	104	3:03:19	183.32	877	160768.72	111.64
3/16/2009	L.S. #81	Pump #1	81A7	0:00:38	0:01:00	1:21:49	0:00:49	99					
3/16/2009	L.S. #81	Pump #2	81A8	0:00:38	0:01:08	1:29:12	0:00:54	99	2:51:01	171.02	877	149981.62	104.15
3/17/2009	L.S. #81	Pump #1	81A7	0:00:06	0:01:02	1:20:21	0:00:49	98					
3/17/2009	L.S. #81	Pump #2	81A8	0:00:04	0:01:12	1:28:34	0:00:54	98	2:48:55	168.92	877	148139.92	102.87
3/18/2009	L.S. #81	Pump #1	81A7	0:00:38	0:01:49	1:57:06	0:01:08	103					
3/18/2009	L.S. #81	Pump #2	81A8	0:00:40	0:02:52	2:19:43	0:01:20	103	4:16:49	256.82	877	225228.22	156.41
3/19/2009	L.S. #81	Pump #1	81A7	0:00:42	0:01:28	1:37:01	0:01:03	91					
3/19/2009	L.S. #81	Pump #2	81A8	0:00:48	0:01:43	1:51:55	0:01:13	91	3:28:56	208.93	877	183234.53	127.25
3/20/2009	L.S. #81	Pump #1	81A7	0:00:02	0:01:21	0:49:26	0:00:49	59					
3/20/2009	L.S. #81	Pump #2	81A8	0:00:08	0:03:19	2:44:32	0:01:12	137	3:33:58	213.97	877	187648.77	130.31
3/21/2009	L.S. #81	Pump #1	81A7	0:00:36	0:01:23	1:41:47	0:00:59	103					
3/21/2009	L.S. #81	Pump #2	81A8	0:00:44	0:01:57	1:56:16	0:01:08	102	3:38:03	218.05	877	191229.85	132.80
3/22/2009	L.S. #81	Pump #1	81A7	0:00:34	0:06:58	1:44:25	0:00:59	105					
3/22/2009	L.S. #81	Pump #2	81A8	0:00:42	0:01:43	1:59:38	0:01:08	105	3:44:03	224.05	877	196491.85	136.45
3/23/2009	L.S. #81	Pump #1	81A7	0:00:34	0:01:14	1:36:12	0:00:52	109					
3/23/2009	L.S. #81	Pump #2	81A8	0:00:40	0:01:31	1:53:52	0:01:02	109	3:30:04	210.07	877	184228.47	127.94
3/24/2009	L.S. #81	Pump #1	81A7	0:00:34	0:01:02	1:23:21	0:00:48	103					
3/24/2009	L.S. #81	Pump #2	81A8	0:00:38	0:01:59	1:34:38	0:00:54	104	2:57:59	177.98	877	156091.38	108.40
3/25/2009	L.S. #81	Pump #1	81A7	0:00:33	0:00:59	1:19:37	0:00:47	101					
3/25/2009	L.S. #81	Pump #2	81A8	0:00:38	0:02:32	1:36:17	0:00:57	101	2:55:54	175.90	877	154264.30	107.13
3/26/2009	L.S. #81	Pump #1	81A7	0:00:34	0:00:58	1:20:21	0:00:46	103					
3/26/2009	L.S. #81	Pump #2	81A8	0:00:42	0:01:16	1:41:59	0:00:58	104	3:02:20	182.33	877	159906.33	111.05
3/27/2009	L.S. #81	Pump #1	81A7	0:00:32	0:01:04	1:24:01	0:00:48	103					
3/27/2009	L.S. #81	Pump #2	81A8	0:00:40	0:01:20	1:36:28	0:00:56	102	3:00:29	180.48	877	158283.88	109.92
3/28/2009	L.S. #81	Pump #1	81A7	0:00:34	0:01:08	1:24:41	0:00:50	101					
3/28/2009	L.S. #81	Pump #2	81A8	0:00:40	0:01:28	1:46:15	0:01:01	103	3:10:56	190.93	877	167448.53	116.28
3/29/2009	L.S. #81	Pump #1	81A7	0:00:36	0:01:06	1:24:40	0:00:50	101					
3/29/2009	L.S. #81	Pump #2	81A8	0:00:42	0:07:39	1:51:46	0:01:07	100	3:16:26	196.43	877	172272.03	119.63
3/30/2009	L.S. #81	Pump #1	81A7	0:00:36	0:00:58	1:16:21	0:00:47	96					
3/30/2009	L.S. #81	Pump #2	81A8	0:00:40	0:01:20	1:37:54	0:01:00	97	2:54:15	174.25	877	152817.25	106.12
3/31/2009	L.S. #81	Pump #1	81A7	0:00:36	0:01:00	1:13:23	0:00:47	92					
3/31/2009	L.S. #81	Pump #2	81A8	0:00:42	0:01:18	1:33:59	0:01:01	91	2:47:22	167.37	877	146780.57	101.93
4/1/2009	L.S. #81	Pump #1	81A7	0:00:34	0:00:59	1:12:33	0:00:46	94					
4/1/2009	L.S. #81	Pump #2	81A8	0:00:45	0:01:20	1:42:40	0:01:04	95	2:55:13	175.22	877	153665.02	106.71
4/2/2009	L.S. #81	Pump #1	81A7	0:00:36	0:00:55	1:10:42	0:00:46	92					
4/2/2009	L.S. #81	Pump #2	81A8	0:00:44	0:01:20	1:35:55	0:01:03	91	2:46:37	166.62	877	146122.82	101.47
4/3/2009	L.S. #81	Pump #1	81A7	0:00:34	0:00:52	1:06:44	0:00:44	89					
4/3/2009	L.S. #81	Pump #2	81A8	0:00:44	0:01:35	1:38:57	0:01:05	91	2:45:41	165.68	877	145304.28	100.91
4/4/2009	L.S. #81	Pump #1	81A7	0:00:34	0:00:58	1:13:13	0:00:46	95					
4/4/2009	L.S. #81	Pump #2	81A8	0:00:50	0:01:28	1:43:08	0:01:05	94	2:56:21	176.35	877	154658.95	107.40
4/5/2009	L.S. #81	Pump #1	81A7	0:00:34	0:00:57	1:10:00	0:00:46	90					
4/5/2009	L.S. #81	Pump #2	81A8	0:00:44	0:01:26	1:32:40	0:01:01	91	2:42:40	162.67	877	142658.67	99.07
4/6/2009	L.S. #81	Pump #1	81A7	0:00:34	0:00:59	1:08:56	0:00:45	90					
4/6/2009	L.S. #81	Pump #2	81A8	0:00:42	0:01:27	1:24:19	0:00:55	90	2:33:15	153.25	877	134400.25	93.33
4/7/2009	L.S. #81	Pump #1	81A7	0:00:32	0:00:53	1:08:17	0:00:40	100					
4/7/2009	L.S. #81	Pump #2	81A8	0:00:38	0:01:06	1:24:51	0:00:50	101	2:33:08	153.13	877	134297.93	93.26
4/8/2009	L.S. #81	Pump #1	81A7	0:00:30	0:00:50	1:09:40	0:00:40	102					
4/8/2009	L.S. #81	Pump #2	81A8	0:00:36	0:01:18	1:40:04	0:00:58	102	2:49:44	169.73	877	148856.13	103.37
4/9/2009	L.S. #81	Pump #1	81A7	0:00:30	0:00:48	1:10:51	0:00:40	105					
4/9/2009	L.S. #81	Pump #2	81A8	0:00:40	0:01:28	1:42:27	0:00:59	104	2:53:18	173.30	877	151984.10	105.54
4/10/2009	L.S. #81	Pump #1	81A7	0:00:32	0:00:52	1:12:18	0:00:42	101					
4/10/2009	L.S. #81	Pump #2	81A8	0:00:38	0:01:11	1:32:41	0:00:54	102	2:44:59	164.98	877	144690.38	100.48
4/11/2009	L.S. #81	Pump #1	81A7	0:00:34	0:00:56	1:12:01	0:00:45	95					
4/11/2009	L.S. #81	Pump #2	81A8	0:00:41	0:01:16	1:30:35	0:00:57	95	2:42:36	162.60	877	142600.20	99.03
4/12/2009	L.S. #81	Pump #1	81A7	0:00:34	0:00:59	1:15:27	0:00:45	100					
4/12/2009	L.S. #81	Pump #2	81A8	0:00:42	0:01:22	1:39:55	0:01:00	99	2:55:22	175.37	877	153796.57	106.80
4/13/2009	L.S. #81	Pump #1	81A7	0:00:34	0:00:53	1:15:47	0:00:45	101					
4/13/2009	L.S. #81	Pump #2	81A8	0:00:42	0:01:12	1:40:58	0:00:59	102	2:56:45	176.75	877	155009.75	107.65
4/14/2009	L.S. #81	Pump #1	81A7	0:00:36	0:00:52	1:11:15	0:00:44	97					
4/14/2009	L.S. #81	Pump #2	81A8	0:00:42	0:01:19	1:34:10	0:00:57	98	2:45:25	165.42	877	145070.42	100.74
4/15/2009	L.S. #81	Pump #1	81A7	0:00:34	0:00:54	1:08:20	0:00:44	93					
4/15/2009	L.S. #81	Pump #2	81A8	0:00:40	0:03:32	1:29:52	0:00:58	92	2:38:12	158.20	877	138741.40	96.35
4/16/2009	L.S. #81	Pump #1	81A7	0:00:32	0:00:49	1:03:23	0:00:42	89					
4/16/2009	L.S. #81	Pump #2	81A8	0:00:40	0:01:06	1:19:51	0:00:53	90	2:23:14	143.23	877	125615.63	87.23
4/17/2009	L.S. #81	Pump #1	81A7	0:00:32	0:00:49	1:07:56	0:00:41	98					
4/17/2009	L.S. #81	Pump #2	81A8	0:00:38	0:01:06	1:24:11	0:00:51	98	2:32:07	152.12	877	133406.32	92.64
4/18/2009	L.S. #81	Pump #1	81A7	0:00:32	0:00:53	1:14:20	0:00:42	104					
4/18/2009	L.S. #81	Pump #2	81A8	0:00:36	0:01:06	1:32:21	0:00:52	105	2:46:41	166.68	877	146181.28	101.51
4/19/2009	L.S. #81	Pump #1	81A7	0:00:32	0:00:52	1:12:53	0:00:43	100					
4/19/2009	L.S. #81	Pump #2	81A8	0:00:38	0:01:13	1:29:51	0:00:54	99	2:42:44	162.73	877	142717.13	99.11
4/20/2009	L.S. #81	Pump #1	81A7	0:00:34	0:00:54	1:10:44	0:00:43	97					
4/20/2009	L.S. #81	Pump #2	81A8	0:00:40	0:01:19	1:34:56	0:00:58	97	2:45:40	165.67	877	145289.67	100.90
4/21/2009	L.S. #81	Pump #1	81A7	0:00:34	0:00:56	1:10:43	0:00:44	95					
4/21/2009	L.S. #81	Pump #2	81A8	0:00:14	0:01:30	1:41:47	0:01:02	97	2:52:30	172.50	877	151282.50	105.06
4/22/2009	L.S. #81	Pump #1	81A7	0:00:32	0:00:51	1:10:07	0:00:42	98					
4/22/2009	L.S. #81	Pump #2	81A8	0:00:40	0:01:10	1:30:18	0:00:55	98	2:40:25	160.42	877	140685.42	97.70
4/23/2009	L.S. #81	Pump #1	81A7	0:00:32	0:00:52	1:08:15	0:00:42	97					
4/23/2009	L.S. #81	Pump #2	81A8	0:00:40	0:01:10	1:28:33	0:00:54	97	2:36:48	156.80	877	137513.60	95.50
4/24/2009	L.S. #81	Pump #1	81A7	0:00:33	0:00:55	1:09:48	0:00:42	98					
4/24/2009	L.S. #81	Pump #2	81A8	0:00:40	0:01:09	1:27:36	0:00:54	97	2:37:24	157.40	877	138039.80	95.86
4/25/2009	L.S. #81	Pump #1	81A7	0:00:32	0:00:52	1:11:14	0:00:43	98					
4/25/2009	L.S. #81	Pump #2	81A8	0:00:38	0:01:10	1:31:33	0:00:55	98	2:42:47	162.78	877	142760.98	99.14

4/26/2009	L.S. #81	Pump #1	81A7	0:00:32	0:00:54	1:15:46	0:00:44	103					
4/26/2009	L.S. #81	Pump #2	81A8	0:00:42	0:01:10	1:35:14	0:00:55	102	2:51:00	171.00	877	149967.00	104.14
4/27/2009	L.S. #81	Pump #1	81A7	0:00:34	0:00:51	1:10:53	0:00:42	99					
4/27/2009	L.S. #81	Pump #2	81A8	0:00:38	0:01:08	1:31:11	0:00:54	100	2:42:04	162.07	877	142132.47	98.70
4/28/2009	L.S. #81	Pump #1	81A7	0:00:34	0:00:52	1:10:43	0:00:42	99					
4/28/2009	L.S. #81	Pump #2	81A8	0:00:40	0:01:04	1:24:54	0:00:52	97	2:35:37	155.62	877	136475.82	94.77
4/29/2009	L.S. #81	Pump #1	81A7	0:00:32	0:00:52	1:08:10	0:00:43	95					
4/29/2009	L.S. #81	Pump #2	81A8	0:00:40	0:01:04	1:23:45	0:00:52	95	2:31:55	151.92	877	133230.92	92.52
4/30/2009	L.S. #81	Pump #1	81A7	0:00:34	0:00:50	1:10:32	0:00:43	98					
4/30/2009	L.S. #81	Pump #2	81A8	0:00:39	0:01:07	1:25:30	0:00:52	98	2:36:02	156.03	877	136841.23	95.03
5/1/2009	L.S. #81	Pump #1	81A7	0:00:34	0:00:49	1:08:03	0:00:42	96					
5/1/2009	L.S. #81	Pump #2	81A8	0:00:38	0:01:02	1:21:39	0:00:51	96	2:29:42	149.70	877	131286.90	91.17
5/2/2009	L.S. #81	Pump #1	81A7	0:00:34	0:00:58	1:13:00	0:00:43	100					
5/2/2009	L.S. #81	Pump #2	81A8	0:00:40	0:01:08	1:30:58	0:00:53	102	2:43:58	163.97	877	143798.77	99.86
5/3/2009	L.S. #81	Pump #1	81A7	0:00:32	0:00:54	1:14:12	0:00:44	100					
5/3/2009	L.S. #81	Pump #2	81A8	0:00:39	0:01:14	1:31:42	0:00:55	100	2:45:54	165.90	877	145494.30	101.04
5/4/2009	L.S. #81	Pump #1	81A7	0:00:34	0:00:54	1:12:26	0:00:44	97					
5/4/2009	L.S. #81	Pump #2	81A8	0:00:40	0:03:30	1:32:03	0:00:56	97	2:44:29	164.48	877	144251.88	100.17
5/5/2009	L.S. #81	Pump #1	81A7	0:00:34	0:00:56	1:10:10	0:00:44	94					
5/5/2009	L.S. #81	Pump #2	81A8	0:00:38	0:01:14	1:24:20	0:00:54	93	2:34:30	154.50	877	135496.50	94.09
5/6/2009	L.S. #81	Pump #1	81A7	0:00:32	0:00:56	1:08:48	0:00:45	91					
5/6/2009	L.S. #81	Pump #2	81A8	0:00:40	0:01:16	1:26:34	0:00:56	92	2:35:22	155.37	877	136256.57	94.62
5/7/2009	L.S. #81	Pump #1	81A7	0:00:34	0:00:58	1:11:37	0:00:45	94					
5/7/2009	L.S. #81	Pump #2	81A8	0:00:42	0:01:09	1:27:35	0:00:56	93	2:39:12	159.20	877	139618.40	96.96
5/8/2009	L.S. #81	Pump #1	81A7	0:00:22	0:00:53	1:09:39	0:00:44	93					
5/8/2009	L.S. #81	Pump #2	81A8	0:00:40	0:01:20	1:24:12	0:00:54	93	2:33:51	153.85	877	134926.45	93.70
5/9/2009	L.S. #81	Pump #1	81A7	0:00:36	0:00:58	1:18:09	0:00:46	100					
5/9/2009	L.S. #81	Pump #2	81A8	0:00:38	0:01:12	1:32:44	0:00:55	100	2:50:53	170.88	877	149864.68	104.07
5/10/2009	L.S. #81	Pump #1	81A7	0:00:36	0:00:59	1:19:14	0:00:47	100					
5/10/2009	L.S. #81	Pump #2	81A8	0:00:41	0:01:10	1:30:37	0:00:54	100	2:49:51	169.85	877	148958.45	103.44
5/11/2009	L.S. #81	Pump #1	81A7	0:00:38	0:00:57	1:15:41	0:00:46	97					
5/11/2009	L.S. #81	Pump #2	81A8	0:00:42	0:01:12	1:31:28	0:00:56	97	2:47:09	167.15	877	146590.55	101.80
5/12/2009	L.S. #81	Pump #1	81A7	0:00:36	0:00:54	1:06:57	0:00:45	88					
5/12/2009	L.S. #81	Pump #2	81A8	0:00:44	0:06:24	1:32:12	0:01:02	88	2:39:09	159.15	877	139574.55	96.93
5/13/2009	L.S. #81	Pump #1	81A7	0:00:34	0:00:58	1:11:16	0:00:46	91					
5/13/2009	L.S. #81	Pump #2	81A8	0:00:42	0:01:16	1:28:24	0:00:58	91	2:39:40	159.67	877	140027.67	97.24
5/14/2009	L.S. #81	Pump #1	81A7	0:00:36	0:01:00	1:10:45	0:00:46	91					
5/14/2009	L.S. #81	Pump #2	81A8	0:00:40	0:01:16	1:31:09	0:00:59	92	2:41:54	161.90	877	141986.30	98.60
5/15/2009	L.S. #81	Pump #1	81A7	0:00:36	0:00:58	1:12:52	0:00:46	94					
5/15/2009	L.S. #81	Pump #2	81A8	0:00:46	0:01:19	1:33:00	0:01:00	93	2:45:52	165.87	877	145465.07	101.02
5/16/2009	L.S. #81	Pump #1	81A7	0:00:34	0:00:59	1:18:38	0:00:47	100					
5/16/2009	L.S. #81	Pump #2	81A8	0:00:46	0:01:24	1:43:43	0:01:02	100	3:02:21	182.35	877	159920.95	111.06
5/17/2009	L.S. #81	Pump #1	81A7	0:00:36	0:00:58	1:25:20	0:00:48	105					
5/17/2009	L.S. #81	Pump #2	81A8	0:00:48	0:01:26	1:58:08	0:01:06	106	3:23:28	203.47	877	178440.27	123.92
5/18/2009	L.S. #81	Pump #1	81A7	0:00:36	0:01:28	1:24:37	0:00:51	99					
5/18/2009	L.S. #81	Pump #2	81A8	0:00:46	0:02:11	1:52:57	0:01:07	100	3:17:34	197.57	877	173265.97	120.32
5/19/2009	L.S. #81	Pump #1	81A7	0:00:40	0:01:03	1:20:47	0:00:52	93					
5/19/2009	L.S. #81	Pump #2	81A8	0:00:48	0:01:28	1:39:23	0:01:04	93	3:00:10	180.17	877	158006.17	109.73
5/20/2009	L.S. #81	Pump #1	81A7	0:00:36	0:01:04	1:20:19	0:00:51	93					
5/20/2009	L.S. #81	Pump #2	81A8	0:00:47	0:01:30	1:47:01	0:01:09	92	3:07:20	187.33	877	164291.33	114.09
5/21/2009	L.S. #81	Pump #1	81A7	0:00:36	0:01:06	1:20:09	0:00:52	91					
5/21/2009	L.S. #81	Pump #2	81A8	0:00:50	0:01:32	1:46:32	0:01:09	92	3:06:41	186.68	877	163721.28	113.70
5/22/2009	L.S. #81	Pump #1	81A7	0:00:02	0:01:06	1:23:30	0:00:51	97					
5/22/2009	L.S. #81	Pump #2	81A8	0:00:02	0:01:28	1:44:16	0:01:03	98	3:07:46	187.77	877	164671.37	114.36
5/23/2009	L.S. #81	Pump #1	81A7	0:00:38	0:01:16	1:27:36	0:00:56	93					
5/23/2009	L.S. #81	Pump #2	81A8	0:00:46	0:01:38	1:51:05	0:01:11	93	3:18:41	198.68	877	174245.28	121.00
5/24/2009	L.S. #81	Pump #1	81A7	0:00:38	0:07:15	1:28:05	0:01:00	87					
5/24/2009	L.S. #81	Pump #2	81A8	0:00:48	0:01:36	1:39:31	0:01:08	87	3:07:36	187.60	877	164525.20	114.25
5/25/2009	L.S. #81	Pump #1	81A7	0:00:42	0:03:02	1:31:20	0:00:58	94					
5/25/2009	L.S. #81	Pump #2	81A8	0:00:49	0:02:02	2:09:47	0:01:22	94	3:41:07	221.12	877	193919.32	134.67
5/26/2009	L.S. #81	Pump #1	81A7	0:00:39	0:01:06	1:19:40	0:00:53	89					
5/26/2009	L.S. #81	Pump #2	81A8	0:00:56	0:01:54	1:58:55	0:01:21	88	3:18:35	198.58	877	174157.58	120.94
5/27/2009	L.S. #81	Pump #1	81A7	0:00:38	0:01:11	1:25:37	0:00:53	96					
5/27/2009	L.S. #81	Pump #2	81A8	0:00:42	0:01:36	1:48:28	0:01:07	97	3:14:05	194.08	877	170211.08	118.20
5/28/2009	L.S. #81	Pump #1	81A7	0:00:37	0:01:04	1:20:16	0:00:51	93					
5/28/2009	L.S. #81	Pump #2	81A8	0:00:44	0:01:18	1:39:08	0:01:04	92	2:59:24	179.40	877	157333.80	109.26
5/29/2009	L.S. #81	Pump #1	81A7	0:00:04	0:01:12	1:23:29	0:00:53	93					
5/29/2009	L.S. #81	Pump #2	81A8	0:00:24	0:05:51	1:52:52	0:01:07	100	3:16:21	196.35	877	172198.95	119.58
5/30/2009	L.S. #81	Pump #1	81A7	0:00:41	0:01:08	1:28:07	0:00:53	99					
5/30/2009	L.S. #81	Pump #2	81A8	0:00:44	0:01:22	1:42:16	0:01:02	98	3:10:23	190.38	877	166966.18	115.95
5/31/2009	L.S. #81	Pump #1	81A7	0:00:36	0:01:09	1:25:50	0:00:53	97					
5/31/2009	L.S. #81	Pump #2	81A8	0:00:42	0:01:24	1:38:46	0:00:59	99	3:04:36	184.60	877	161894.20	112.43
6/1/2009	L.S. #81	Pump #1	81A7	0:00:38	0:01:04	1:19:58	0:00:51	93					
6/1/2009	L.S. #81	Pump #2	81A8	0:00:40	0:01:12	1:29:39	0:00:57	93	2:49:37	169.62	877	148753.82	103.30
6/2/2009	L.S. #81	Pump #1	81A7	0:00:40	0:01:04	1:20:00	0:00:51	93					
6/2/2009	L.S. #81	Pump #2	81A8	0:00:44	0:01:06	1:23:57	0:00:54	92	2:43:57	163.95	877	143784.15	99.85
6/3/2009	L.S. #81	Pump #1	81A7	0:00:40	0:01:04	1:17:56	0:00:51	91					
6/3/2009	L.S. #81	Pump #2	81A8	0:00:40	0:06:44	1:30:09	0:00:58	92	2:48:05	168.08	877	147409.08	102.37
6/4/2009	L.S. #81	Pump #1	81A7	0:00:40	0:01:30	1:20:52	0:00:52	93					
6/4/2009	L.S. #81	Pump #2	81A8	0:00:14	0:01:08	1:22:25	0:00:53	93	2:43:17	163.28	877	143199.48	99.44
6/5/2009	L.S. #81	Pump #1	81A7	0:00:38	0:01:06	1:17:27	0:00:52	89					
6/5/2009	L.S. #81	Pump #2	81A8	0:00:45	0:01:20	1:31:57	0:01:01	90	2:49:24	169.40	877	148563.80	103.17
6/6/2009	L.S. #81	Pump #1	81A7	0:00:42	0:01:10	1:24:04	0:00:55	91					
6/6/2009	L.S. #81	Pump #2	81A8	0:00:48	0:01:26	1:38:27	0:01:05	90	3:02:31	182.52	877	160067.12	111.16
6/7/2009	L.S. #81	Pump #1	81A7	0:00:38	0:01:08	1:25:55	0:00:55	93					
6/7/2009	L.S. #81	Pump #2	81A8	0:00:48	0:02:58	1:45:43	0:01:08	93	3:11:38	191.63	877	168062.43	116.71
6/8/2009	L.S. #81	Pump #1	81A7	0:00:42	0:01:07	1:20:13	0:00:53	89					
6/8/2009	L.S. #81	Pump #2	81A8	0:00:42	0:01:24	1:33:26	0:01:02	90	2:53:39	173.65	877	152291.05	105.76
6/9/2009	L.S. #81	Pump #1	81A7	0:00:42	0:01:08	1:20:08	0:00:55	87					
6/9/2009	L.S. #81	Pump #2	81A8	0:00:44	0:01:20	1:31:54	0:01:03	87	2:52:02	172.03	877	150873.23	104.77
6/10/2009	L.S. #81	Pump #1	81A7	0:00:40	0:01:13	1:21:09	0:00:54	90					
6/10/2009	L.S. #81	Pump #2	81A8	0:00:44	0:01:20	1:33:17	0:01:02	89	2:54:26	174.43	877	152978.03	106.23
6/11/2009	L.S. #81	Pump #1	81A7	0:00:40	0:01:04	1:16:51	0:00:52	88					
6/11/2009	L.S. #81	Pump #2	81A8	0:00:44	0:01:15	1:28:52	0:01:00	88	2:45:43	165.72	877	145333.52	100.93
6/12/2009	L.S. #81	Pump #1	81A7	0:00:40	0:01:02	1:16:57	0:00:51	89					
6/12/2009	L.S. #81	Pump #2	81A8	0:00:42	0:01:10	1:26:48	0:00:59	88	2:43:45	163.75	877	143608.75	99.73
6/13/2009	L.S. #81	Pump #1	81A7	0:00:40	0:01:07	1:20:15	0:00:52	91					
6/13/2009	L.S. #81	Pump #2	81A8	0:00:42	0:01:16	1:29:59	0:00:58	92	2:50:14	170.23	877	149294.63	103.68
6/14/2009	L.S. #81	Pump #1	81A7	0:00:40	0:01:08	1:25:00	0:00:53	95					
6/14/2009	L.S. #81	Pump #2	81A8	0:00:44	0:01:22	1:38:10	0:01:01	96	3:03:10	183.17	877	160637.17	111.55
6/15/2009	L.S. #81	Pump #1	81A7	0:00:40	0:01:02	1:18:12	0:00:52	88					
6/15/2009	L.S. #81	Pump #2	81A8	0:00:44	0:01:14	1:27:28	0:00:58	89	2:45:40	165.67	877	145289.67	100.90
6/16/2009	L.S. #81	Pump #1	81A7	0:00:32	0:01:02	1:14:53	0:00:52	86					
6/16/2009	L.S. #81	Pump #2	81A8	0:00:28	0:01:14	1:24:18	0:00:58	86	2:39:11	159.18	877	139603.78	96.95
6/17/2009	L.S. #81	Pump #1	81A7	0:00:30	0:01:52	1:18:04	0:00:52	89					
6/17/2009	L.S. #81	Pump #2	81A8	0:00:12	0:01:16	1:21:42	0:00:57	85	2:39:46	159.77	877	140115.37	97.30
6/18/2009	L.S. #81	Pump #1	81A7	0:00:40	0:01:12	1:16:58	0:00:53	86					
6/18/2009	L.S. #81	Pump #2	81A8	0:00:42	0:01:18	1:26:29	0:01:01	85	2:43:27	163.45	877	143345.65	99.55
6/19/2009	L.S. #81	Pump #1	81A7	0:00:40	0:01:06	1:21:33	0:00:53	91					
6/19/2009	L.S. #81	Pump #2	81A8	0:00:06	0:01:12	1:30:19	0:00:58	92	2:51:52	171.87	877	150727.07	104.67
6/20/2009	L.S. #81	Pump #1	81A7	0:00:38	0:01:10	1:23:02	0:00:54	91					
6/20/2009	L.S. #81	Pump #2	81A8	0:00:42	0:01:12	1:23:45	0:00:55	90	2:46:47	166.78	877	146268.98	101.58
6/21/2009	L.S. #81	Pump #1	81A7	0:00:38	0:01:10	1:17:06	0:00:53	86					
6/21/2009	L.S. #81	Pump #2	81A8	0:00:42	0:01:23	1:27:13	0:01:00	87	2:44:19	164.32	877	144105.72	100.07

6/22/2009	L.S. #81	Pump #1	81A7	0:00:40	0:01:06	1:17:56	0:00:55	85					
6/22/2009	L.S. #81	Pump #2	81A8	0:00:44	0:01:14	1:25:35	0:01:00	85	2:43:31	163.52	877	143404.12	99.59
6/23/2009	L.S. #81	Pump #1	81A7	0:00:40	0:01:28	1:34:05	0:01:02	91					
6/23/2009	L.S. #81	Pump #2	81A8	0:00:46	0:01:59	1:44:47	0:01:09	91	3:18:52	198.87	877	174406.07	121.12
6/24/2009	L.S. #81	Pump #1	81A7	0:00:44	0:01:18	1:30:03	0:01:00	89					
6/24/2009	L.S. #81	Pump #2	81A8	0:00:44	0:01:22	1:38:45	0:01:06	89	3:08:48	188.80	877	165577.60	114.98
6/25/2009	L.S. #81	Pump #1	81A7	0:00:42	0:01:04	1:20:09	0:00:54	89					
6/25/2009	L.S. #81	Pump #2	81A8	0:00:45	0:01:18	1:31:02	0:01:02	88	2:51:11	171.18	877	150127.78	104.26
6/26/2009	L.S. #81	Pump #1	81A7	0:00:40	0:01:03	1:18:35	0:00:52	89					
6/26/2009	L.S. #81	Pump #2	81A8	0:00:44	0:01:16	1:31:46	0:01:01	90	2:50:21	170.35	877	149396.95	103.75
6/27/2009	L.S. #81	Pump #1	81A7	0:00:42	0:01:06	1:24:38	0:00:55	92					
6/27/2009	L.S. #81	Pump #2	81A8	0:00:44	0:01:26	1:36:54	0:01:03	91	3:01:32	181.53	877	159204.73	110.56
6/28/2009	L.S. #81	Pump #1	81A7	0:00:42	0:01:08	1:24:05	0:00:55	90					
6/28/2009	L.S. #81	Pump #2	81A8	0:00:44	0:01:24	1:34:03	0:01:02	91	2:58:08	178.13	877	156222.93	108.49
6/29/2009	L.S. #81	Pump #1	81A7	0:00:44	0:01:04	1:21:21	0:00:54	90					
6/29/2009	L.S. #81	Pump #2	81A8	0:00:46	0:01:12	1:28:00	0:00:58	90	2:49:21	169.35	877	148519.95	103.14
6/30/2009	L.S. #81	Pump #1	81A7	0:00:10	0:01:06	1:21:25	0:00:54	89					
6/30/2009	L.S. #81	Pump #2	81A8	0:00:08	0:01:08	1:23:01	0:00:55	89	2:44:26	164.43	877	144208.03	100.14
7/1/2009	L.S. #81	Pump #1	81A7	0:00:40	0:01:10	1:22:20	0:00:54	90					
7/1/2009	L.S. #81	Pump #2	81A8	0:00:42	0:01:09	1:26:49	0:00:57	91	2:49:09	169.15	877	148344.55	103.02
7/2/2009	L.S. #81	Pump #1	81A7	0:00:42	0:01:06	1:23:29	0:00:56	88					
7/2/2009	L.S. #81	Pump #2	81A8	0:00:44	0:01:14	1:26:56	0:00:59	87	2:50:25	170.42	877	149455.42	103.79
7/3/2009	L.S. #81	Pump #1	81A7	0:00:46	0:01:12	1:36:37	0:01:01	95					
7/3/2009	L.S. #81	Pump #2	81A8	0:00:42	0:01:20	1:38:01	0:01:01	95	3:14:38	194.63	877	170693.43	118.54
7/4/2009	L.S. #81	Pump #1	81A7	0:00:42	0:01:20	1:35:29	0:01:00	95					
7/4/2009	L.S. #81	Pump #2	81A8	0:00:44	0:01:19	1:33:40	0:00:59	94	3:09:09	189.15	877	165884.55	115.20
7/5/2009	L.S. #81	Pump #1	81A7	0:00:42	0:01:14	1:31:49	0:00:59	93					
7/5/2009	L.S. #81	Pump #2	81A8	0:00:44	0:01:10	1:28:49	0:00:57	92	3:00:38	180.63	877	158415.43	110.01
7/6/2009	L.S. #81	Pump #1	81A7	0:00:44	0:01:13	1:23:52	0:00:57	88					
7/6/2009	L.S. #81	Pump #2	81A8	0:00:44	0:01:15	1:23:19	0:00:56	88	2:47:11	167.18	877	146619.78	101.82
7/7/2009	L.S. #81	Pump #1	81A7	0:00:38	0:01:08	1:19:34	0:00:54	87					
7/7/2009	L.S. #81	Pump #2	81A8	0:00:36	0:01:10	1:21:37	0:00:55	88	2:41:11	161.18	877	141357.78	98.17
7/8/2009	L.S. #81	Pump #1	81A7	0:00:42	0:01:10	1:23:24	0:00:55	90					
7/8/2009	L.S. #81	Pump #2	81A8	0:00:44	0:01:09	1:26:17	0:00:57	90	2:49:41	169.68	877	148812.28	103.34
7/9/2009	L.S. #81	Pump #1	81A7	0:00:28	0:01:04	1:22:29	0:00:53	93					
7/9/2009	L.S. #81	Pump #2	81A8	0:00:44	0:01:14	1:27:10	0:00:57	91	2:49:39	169.65	877	148783.05	103.32
7/10/2009	L.S. #81	Pump #1	81A7	0:00:42	0:01:03	1:21:26	0:00:53	91					
7/10/2009	L.S. #81	Pump #2	81A8	0:00:46	0:01:13	1:32:58	0:01:01	91	2:54:24	174.40	877	152948.80	106.21
7/11/2009	L.S. #81	Pump #1	81A7	0:00:42	0:01:06	1:23:58	0:00:53	94					
7/11/2009	L.S. #81	Pump #2	81A8	0:00:44	0:01:20	1:33:54	0:01:00	93	2:57:52	177.87	877	155989.07	108.33
7/12/2009	L.S. #81	Pump #1	81A7	0:00:42	0:01:03	1:23:11	0:00:53	94					
7/12/2009	L.S. #81	Pump #2	81A8	0:00:46	0:01:18	1:36:24	0:01:01	94	2:59:35	179.58	877	157494.58	109.37
7/13/2009	L.S. #81	Pump #1	81A7	0:00:40	0:01:03	1:23:41	0:00:53	93					
7/13/2009	L.S. #81	Pump #2	81A8	0:00:46	0:01:18	1:37:48	0:01:02	94	3:01:29	181.48	877	159160.88	110.53
7/14/2009	L.S. #81	Pump #1	81A7	0:00:26	0:01:03	1:20:00	0:00:52	92					
7/14/2009	L.S. #81	Pump #2	81A8	0:00:26	0:01:26	1:42:02	0:01:05	93	3:02:02	182.03	877	159643.23	110.86
7/15/2009	L.S. #81	Pump #1	81A7	0:00:42	0:01:04	1:15:58	0:00:52	87					
7/15/2009	L.S. #81	Pump #2	81A8	0:00:48	0:01:22	1:33:12	0:01:04	87	2:49:10	169.17	877	148359.17	103.03
7/16/2009	L.S. #81	Pump #1	81A7	0:00:42	0:01:30	1:21:51	0:00:55	88					
7/16/2009	L.S. #81	Pump #2	81A8	0:00:22	0:01:20	1:33:36	0:01:03	89	2:55:27	175.45	877	153869.65	106.85
7/17/2009	L.S. #81	Pump #1	81A7	0:00:42	0:01:07	1:22:11	0:00:55	89					
7/17/2009	L.S. #81	Pump #2	81A8	0:00:50	0:01:26	1:40:28	0:01:07	89	3:02:39	182.65	877	160184.05	111.24
7/18/2009	L.S. #81	Pump #1	81A7	0:00:42	0:01:15	1:25:22	0:00:56	91					
7/18/2009	L.S. #81	Pump #2	81A8	0:00:52	0:01:34	1:48:37	0:01:12	90	3:13:59	193.98	877	170123.38	118.14
7/19/2009	L.S. #81	Pump #1	81A7	0:00:38	0:01:12	1:22:41	0:00:56	88					
7/19/2009	L.S. #81	Pump #2	81A8	0:00:50	0:01:38	1:47:54	0:01:12	89	3:10:35	190.58	877	167141.58	116.07
7/20/2009	L.S. #81	Pump #1	81A7	0:00:40	0:01:10	1:24:03	0:00:54	92					
7/20/2009	L.S. #81	Pump #2	81A8	0:00:48	0:01:43	1:54:00	0:01:15	91	3:18:03	198.05	877	173689.85	120.62
7/21/2009	L.S. #81	Pump #1	81A7	0:00:44	0:01:03	1:22:05	0:00:54	90					
7/21/2009	L.S. #81	Pump #2	81A8	0:00:56	0:02:03	1:57:30	0:01:18	90	3:19:35	199.58	877	175034.58	121.55
7/22/2009	L.S. #81	Pump #1	81A7	0:00:42	0:01:08	1:23:02	0:00:54	92					
7/22/2009	L.S. #81	Pump #2	81A8	0:00:52	0:08:44	1:58:58	0:01:17	92	3:22:00	202.00	877	177154.00	123.02
7/23/2009	L.S. #81	Pump #1	81A7	0:00:40	0:01:06	1:18:27	0:00:54	86					
7/23/2009	L.S. #81	Pump #2	81A8	0:00:48	0:01:22	1:31:56	0:01:04	86	2:50:23	170.38	877	149426.18	103.77
7/24/2009	L.S. #81	Pump #1	81A7	0:00:42	0:01:07	1:22:11	0:00:55	89					
7/24/2009	L.S. #81	Pump #2	81A8	0:00:47	0:01:25	1:34:22	0:01:02	90	2:56:33	176.55	877	154834.35	107.52
7/25/2009	L.S. #81	Pump #1	81A7	0:00:42	0:01:08	1:22:42	0:00:55	90					
7/25/2009	L.S. #81	Pump #2	81A8	0:00:46	0:01:30	1:40:32	0:01:06	91	3:03:14	183.23	877	160695.63	111.59
7/26/2009	L.S. #81	Pump #1	81A7	0:00:42	0:01:06	1:26:40	0:00:55	94					
7/26/2009	L.S. #81	Pump #2	81A8	0:00:46	0:01:38	1:48:03	0:01:10	92	3:14:43	194.72	877	170766.52	118.59
7/27/2009	L.S. #81	Pump #1	81A7	0:00:42	0:01:12	1:22:43	0:00:54	91					
7/27/2009	L.S. #81	Pump #2	81A8	0:00:54	0:01:29	1:45:32	0:01:09	91	3:08:15	188.25	877	165095.25	114.65
7/28/2009	L.S. #81	Pump #1	81A7	0:00:42	0:01:14	1:22:11	0:00:54	90					
7/28/2009	L.S. #81	Pump #2	81A8	0:00:50	0:01:28	1:42:35	0:01:08	90	3:04:46	184.77	877	162040.37	112.53
7/29/2009	L.S. #81	Pump #1	81A7	0:00:42	0:01:12	1:19:26	0:00:54	87					
7/29/2009	L.S. #81	Pump #2	81A8	0:00:52	0:01:36	1:46:02	0:01:12	88	3:05:28	185.47	877	162654.27	112.95
7/30/2009	L.S. #81	Pump #1	81A7	0:00:42	0:01:08	1:18:48	0:00:54	86					
7/30/2009	L.S. #81	Pump #2	81A8	0:00:54	0:07:33	1:54:42	0:01:21	84	3:13:30	193.50	877	169699.50	117.85
7/31/2009	L.S. #81	Pump #1	81A7	0:00:40	0:01:08	1:20:36	0:00:55	87					
7/31/2009	L.S. #81	Pump #2	81A8	0:01:00	0:01:40	1:50:05	0:01:15	88	3:10:41	190.68	877	167229.28	116.13
8/1/2009	L.S. #81	Pump #1	81A7	0:00:42	0:01:10	1:27:12	0:00:56	93					
8/1/2009	L.S. #81	Pump #2	81A8	0:00:50	0:01:32	1:50:34	0:01:11	93	3:17:46	197.77	877	173441.37	120.45
8/2/2009	L.S. #81	Pump #1	81A7	0:00:44	0:01:09	1:23:47	0:00:55	90					
8/2/2009	L.S. #81	Pump #2	81A8	0:00:52	0:03:26	1:50:56	0:01:13	90	3:14:43	194.72	877	170766.52	118.59
8/3/2009	L.S. #81	Pump #1	81A7	0:00:44	0:01:06	1:20:57	0:00:53	90					
8/3/2009	L.S. #81	Pump #2	81A8	0:00:50	0:01:30	1:45:25	0:01:09	91	3:06:22	186.37	877	163443.57	113.50
8/4/2009	L.S. #81	Pump #1	81A7	0:00:38	0:01:06	1:17:21	0:00:53	87					
8/4/2009	L.S. #81	Pump #2	81A8	0:00:48	0:01:26	1:38:31	0:01:07	87	2:55:52	175.87	877	154235.07	107.11
8/5/2009	L.S. #81	Pump #1	81A7	0:00:40	0:01:05	1:21:16	0:00:53	91					
8/5/2009	L.S. #81	Pump #2	81A8	0:00:48	0:01:28	1:41:40	0:01:07	91	3:02:56	182.93	877	160432.53	111.41
8/6/2009	L.S. #81	Pump #1	81A7	0:00:43	0:01:05	1:22:20	0:00:53	92					
8/6/2009	L.S. #81	Pump #2	81A8	0:00:52	0:01:26	1:43:34	0:01:06	93	3:05:54	185.90	877	163034.30	113.22
8/7/2009	L.S. #81	Pump #1	81A7	0:00:40	0:07:57	1:24:22	0:00:57	88					
8/7/2009	L.S. #81	Pump #2	81A8	0:00:50	0:01:18	1:36:38	0:01:05	88	3:01:00	181.00	877	158737.00	110.23
8/8/2009	L.S. #81	Pump #1	81A7	0:00:39	0:01:13	1:20:54	0:00:53	90					
8/8/2009	L.S. #81	Pump #2	81A8	0:00:50	0:01:39	1:49:18	0:01:12	90	3:10:12	190.20	877	166805.40	115.84
8/9/2009	L.S. #81	Pump #1	81A7	0:00:40	0:01:07	1:21:19	0:00:53	91					
8/9/2009	L.S. #81	Pump #2	81A8	0:00:50	0:03:38	1:58:14	0:01:17	91	3:19:33	199.55	877	175005.35	121.53
8/10/2009	L.S. #81	Pump #1	81A7	0:00:37	0:01:12	1:19:46	0:00:53	88					
8/10/2009	L.S. #81	Pump #2	81A8	0:00:44	0:01:14	1:28:47	0:01:00	88	2:48:33	168.55	877	147818.35	102.65
8/11/2009	L.S. #81	Pump #1	81A7	0:00:30	0:11:43	1:30:39	0:01:00	90					
8/11/2009	L.S. #81	Pump #2	81A8	0:00:30	0:01:18	1:28:31	0:00:59	89	2:59:10	179.17	877	157129.17	109.12
8/12/2009	L.S. #81	Pump #1	81A7	0:00:40	0:01:06	1:20:05	0:00:52	92					
8/12/2009	L.S. #81	Pump #2	81A8	0:00:44	0:01:08	1:25:11	0:00:56	91	2:45:16	165.27	877	144938.87	100.65
8/13/2009	L.S. #81	Pump #1	81A7	0:00:42	0:01:06	1:23:38	0:00:53	94					
8/13/2009	L.S. #81	Pump #2	81A8	0:00:40	0:01:16	1:28:06	0:00:56	94	2:51:44	171.73	877	150610.13	104.59
8/14/2009	L.S. #81	Pump #1	81A7	0:00:44	0:01:09	1:23:04	0:00:53	92					
8/14/2009	L.S. #81	Pump #2	81A8	0:00:46	0:01:17	1:33:11	0:01:00	93	2:56:15	176.25	877	154571.25	107.34
8/15/2009	L.S. #81	Pump #1	81A7	0:00:41	0:01:14	1:28:10	0:00:54	96					
8/15/2009	L.S. #81	Pump #2	81A8	0:00:46	0:01:40	1:44:54	0:01:04	97	3:13:04	193.07	877	169319.47	117.58
8/16/2009	L.S. #81	Pump #1	81A7	0:00:40	0:01:08	1:25:55	0:00:56	91					
8/16/2009	L.S. #81	Pump #2	81A8	0:00:54	0:01:34	1:47:18	0:01:10	91	3:13:13	193.22	877	169451.02	117.67
8/17/2009	L.S. #81	Pump #1	81A7	0:00:40	0:01:04	1:25:36	0:00:54	94					
8/17/2009	L.S. #81	Pump #2	81A8	0:00:48	0:03:40	1:45:49	0:01:07	94	3:11:25	191.42	877	167872.42	116.58

8/18/2009	L.S. #81	Pump #1	81A7	0:00:41	0:01:04	1:23:36	0:00:54	92					
8/18/2009	L.S. #81	Pump #2	81A8	0:00:48	0:01:19	1:37:52	0:01:04	91	3:01:28	181.47	877	159146.27	110.52
8/19/2009	L.S. #81	Pump #1	81A7	0:00:40	0:01:06	1:25:11	0:00:53	95					
8/19/2009	L.S. #81	Pump #2	81A8	0:00:50	0:01:22	1:45:55	0:01:06	95	3:11:06	191.10	877	167594.70	116.39
8/20/2009	L.S. #81	Pump #1	81A7	0:00:40	0:01:06	1:25:17	0:00:54	94					
8/20/2009	L.S. #81	Pump #2	81A8	0:00:52	0:01:38	1:56:39	0:01:14	94	3:21:56	201.93	877	177095.53	122.98
8/21/2009	L.S. #81	Pump #1	81A7	0:00:44	0:01:07	1:21:45	0:00:53	91					
8/21/2009	L.S. #81	Pump #2	81A8	0:00:56	0:01:39	1:56:02	0:01:16	90	3:17:47	197.78	877	173455.98	120.46
8/22/2009	L.S. #81	Pump #1	81A7	0:00:40	0:01:11	1:23:33	0:00:53	93					
8/22/2009	L.S. #81	Pump #2	81A8	0:00:54	0:01:48	1:57:57	0:01:16	93	3:21:30	201.50	877	176715.50	122.72
8/23/2009	L.S. #81	Pump #1	81A7	0:00:42	0:01:14	1:23:19	0:00:56	88					
8/23/2009	L.S. #81	Pump #2	81A8	0:00:54	0:01:54	1:55:28	0:01:18	88	3:18:47	198.78	877	174332.98	121.06
8/24/2009	L.S. #81	Pump #1	81A7	0:00:40	0:01:07	1:22:55	0:00:54	91					
8/24/2009	L.S. #81	Pump #2	81A8	0:00:52	0:01:44	1:54:04	0:01:15	91	3:16:59	196.98	877	172754.38	119.97
8/25/2009	L.S. #81	Pump #1	81A7	0:00:42	0:01:13	1:22:41	0:00:55	89					
8/25/2009	L.S. #81	Pump #2	81A8	0:00:54	0:01:38	1:49:34	0:01:13	90	3:12:15	192.25	877	168603.25	117.09
8/26/2009	L.S. #81	Pump #1	81A7	0:00:40	0:01:17	1:26:54	0:00:57	91					
8/26/2009	L.S. #81	Pump #2	81A8	0:00:17	0:01:34	1:50:00	0:01:12	91	3:16:54	196.90	877	172681.30	119.92
8/27/2009	L.S. #81	Pump #1	81A7	0:00:42	0:01:07	1:22:25	0:00:55	88					
8/27/2009	L.S. #81	Pump #2	81A8	0:00:54	0:01:36	1:52:29	0:01:15	89	3:14:54	194.90	877	170927.30	118.70
8/28/2009	L.S. #81	Pump #1	81A7	0:00:46	0:01:07	1:18:54	0:00:56	84					
8/28/2009	L.S. #81	Pump #2	81A8	0:00:51	0:01:28	1:32:53	0:01:06	84	2:51:47	171.78	877	150653.98	104.62
8/29/2009	L.S. #81	Pump #1	81A7	0:00:46	0:01:08	1:20:39	0:00:55	87					
8/29/2009	L.S. #81	Pump #2	81A8	0:00:50	0:01:22	1:35:05	0:01:04	88	2:55:44	175.73	877	154118.13	107.03
8/30/2009	L.S. #81	Pump #1	81A7	0:00:40	0:01:10	1:21:35	0:00:56	86					
8/30/2009	L.S. #81	Pump #2	81A8	0:00:48	0:01:20	1:32:44	0:01:05	85	2:54:19	174.32	877	152875.72	106.16
8/31/2009	L.S. #81	Pump #1	81A7	0:00:42	0:13:45	1:37:02	0:01:05	89					
8/31/2009	L.S. #81	Pump #2	81A8	0:00:47	0:01:28	1:36:12	0:01:05	88	3:13:14	193.23	877	169465.63	117.68
9/1/2009	L.S. #81	Pump #1	81A7	0:00:42	0:01:08	1:20:10	0:00:54	87					
9/1/2009	L.S. #81	Pump #2	81A8	0:00:47	0:01:28	1:27:22	0:01:00	86	2:47:32	167.53	877	146926.73	102.03
9/2/2009	L.S. #81	Pump #1	81A7	0:00:42	0:01:12	1:18:20	0:00:56	83					
9/2/2009	L.S. #81	Pump #2	81A8	0:00:46	0:01:21	1:29:03	0:01:03	84	2:47:23	167.38	877	146795.18	101.94
9/3/2009	L.S. #81	Pump #1	81A7	0:00:44	0:01:08	1:19:09	0:00:56	84					
9/3/2009	L.S. #81	Pump #2	81A8	0:00:46	0:01:20	1:28:29	0:01:03	84	2:47:38	167.63	877	147014.43	102.09
9/4/2009	L.S. #81	Pump #1	81A7	0:00:40	0:01:16	1:21:13	0:00:58	84					
9/4/2009	L.S. #81	Pump #2	81A8	0:00:45	0:01:14	1:26:29	0:01:01	84	2:47:42	167.70	877	147072.90	102.13
9/5/2009	L.S. #81	Pump #1	81A7	0:00:44	0:01:16	1:30:01	0:00:58	92					
9/5/2009	L.S. #81	Pump #2	81A8	0:00:46	0:01:24	1:33:23	0:01:01	91	3:03:24	183.40	877	160841.80	111.70
9/6/2009	L.S. #81	Pump #1	81A7	0:00:40	0:01:16	1:24:24	0:00:57	88					
9/6/2009	L.S. #81	Pump #2	81A8	0:00:44	0:01:30	1:37:23	0:01:04	90	3:01:47	181.78	877	159423.98	110.71
9/7/2009	L.S. #81	Pump #1	81A7	0:00:42	0:01:20	1:32:14	0:00:59	93					
9/7/2009	L.S. #81	Pump #2	81A8	0:00:48	0:01:42	1:49:51	0:01:11	92	3:22:05	202.08	877	177227.08	123.07
9/8/2009	L.S. #81	Pump #1	81A7	0:00:20	0:01:14	1:21:38	0:00:56	86					
9/8/2009	L.S. #81	Pump #2	81A8	0:00:18	0:01:35	1:43:28	0:01:11	87	3:05:06	185.10	877	162332.70	112.73
9/9/2009	L.S. #81	Pump #1	81A7	0:00:44	0:01:13	1:23:11	0:00:59	84					
9/9/2009	L.S. #81	Pump #2	81A8	0:00:14	0:01:34	1:41:16	0:01:13	83	3:04:27	184.45	877	161762.65	112.34
9/10/2009	L.S. #81	Pump #1	81A7	0:00:36	0:04:40	1:53:39	0:01:18	87					
9/10/2009	L.S. #81	Pump #2	81A8	0:01:00	0:14:14	2:39:01	0:01:49	87	4:32:40	272.67	877	239128.67	166.06
9/11/2009	L.S. #81	Pump #1	81A7	0:00:50	0:01:22	1:12:40	0:01:08	64					
9/11/2009	L.S. #81	Pump #2	81A8	0:00:59	0:01:55	1:30:32	0:01:24	64	2:43:12	163.20	877	143126.40	99.39
9/12/2009	L.S. #81	Pump #1	81A7	0:00:48	0:01:32	1:38:45	0:01:08	87					
9/12/2009	L.S. #81	Pump #2	81A8	0:00:59	0:02:08	2:06:10	0:01:27	87	3:44:55	224.92	877	197251.92	136.98
9/13/2009	L.S. #81	Pump #1	81A7	0:00:48	0:01:28	1:39:20	0:01:07	88					
9/13/2009	L.S. #81	Pump #2	81A8	0:00:54	0:01:54	2:02:52	0:01:24	87	3:42:12	222.20	877	194869.40	135.33
9/14/2009	L.S. #81	Pump #1	81A7	0:00:48	0:01:30	1:30:01	0:01:07	80					
9/14/2009	L.S. #81	Pump #2	81A8	0:00:58	0:02:14	2:01:45	0:01:30	80	3:31:46	211.77	877	185719.37	128.97
9/15/2009	L.S. #81	Pump #1	81A7	0:00:49	0:01:28	1:38:53	0:01:10	84					
9/15/2009	L.S. #81	Pump #2	81A8	0:01:04	0:02:05	2:09:28	0:01:33	83	3:48:21	228.35	877	200262.95	139.07
9/16/2009	L.S. #81	Pump #1	81A7	0:00:48	0:01:20	1:30:43	0:01:05	83					
9/16/2009	L.S. #81	Pump #2	81A8	0:00:56	0:02:00	2:03:33	0:01:27	84	3:34:16	214.27	877	187911.87	130.49
9/17/2009	L.S. #81	Pump #1	81A7	0:00:46	0:01:18	1:25:32	0:01:01	84					
9/17/2009	L.S. #81	Pump #2	81A8	0:00:48	0:02:05	2:00:15	0:01:25	84	3:25:47	205.78	877	180471.98	125.33
9/18/2009	L.S. #81	Pump #1	81A7	0:00:44	0:01:18	1:26:36	0:01:01	85					
9/18/2009	L.S. #81	Pump #2	81A8	0:00:58	0:03:04	2:12:53	0:01:33	85	3:39:29	219.48	877	192486.88	133.67
9/19/2009	L.S. #81	Pump #1	81A7	0:00:44	0:01:24	1:31:51	0:01:02	88					
9/19/2009	L.S. #81	Pump #2	81A8	0:00:54	0:02:20	2:15:26	0:01:32	87	3:47:17	227.28	877	199327.48	138.42
9/20/2009	L.S. #81	Pump #1	81A7	0:00:44	0:01:17	1:35:00	0:01:01	93					
9/20/2009	L.S. #81	Pump #2	81A8	0:00:54	0:02:08	2:14:22	0:01:26	93	3:49:22	229.37	877	201154.57	139.69
9/21/2009	L.S. #81	Pump #1	81A7	0:00:44	0:01:14	1:26:29	0:01:00	86					
9/21/2009	L.S. #81	Pump #2	81A8	0:00:52	0:01:32	1:46:50	0:01:14	86	3:13:19	193.32	877	169538.72	117.74
9/22/2009	L.S. #81	Pump #1	81A7	0:00:44	0:01:08	1:24:07	0:00:57	88					
9/22/2009	L.S. #81	Pump #2	81A8	0:00:52	0:01:30	1:43:13	0:01:11	87	3:07:20	187.33	877	164291.33	114.09
9/23/2009	L.S. #81	Pump #1	81A7	0:00:40	0:01:14	1:27:00	0:01:00	87					
9/23/2009	L.S. #81	Pump #2	81A8	0:00:53	0:01:32	1:54:14	0:01:17	88	3:21:14	201.23	877	176481.63	122.56
9/24/2009	L.S. #81	Pump #1	81A7	0:00:46	0:01:12	1:23:43	0:00:59	84					
9/24/2009	L.S. #81	Pump #2	81A8	0:01:02	0:01:50	1:54:02	0:01:21	84	3:17:45	197.75	877	173426.75	120.44
9/25/2009	L.S. #81	Pump #1	81A7	0:00:44	0:01:14	1:23:31	0:00:59	84					
9/25/2009	L.S. #81	Pump #2	81A8	0:00:56	0:01:41	1:49:10	0:01:17	84	3:12:41	192.68	877	168983.28	117.35
9/26/2009	L.S. #81	Pump #1	81A7	0:00:44	0:01:12	1:23:52	0:00:58	86					
9/26/2009	L.S. #81	Pump #2	81A8	0:00:53	0:03:08	1:55:09	0:01:19	87	3:19:01	199.02	877	174537.62	121.21
9/27/2009	L.S. #81	Pump #1	81A7	0:00:42	0:01:08	1:26:04	0:00:57	90					
9/27/2009	L.S. #81	Pump #2	81A8	0:00:54	0:01:32	1:50:52	0:01:14	89	3:16:56	196.93	877	172710.53	119.94
9/28/2009	L.S. #81	Pump #1	81A7	0:00:44	0:01:10	1:25:02	0:00:57	89					
9/28/2009	L.S. #81	Pump #2	81A8	0:00:54	0:01:41	1:57:15	0:01:18	89	3:22:17	202.28	877	177402.48	123.20
9/29/2009	L.S. #81	Pump #1	81A7	0:00:44	0:01:07	1:19:39	0:00:56	85					
9/29/2009	L.S. #81	Pump #2	81A8	0:00:54	0:01:40	1:52:08	0:01:18	85	3:11:47	191.78	877	168193.98	116.80
9/30/2009	L.S. #81	Pump #1	81A7	0:00:40	0:01:02	1:18:39	0:00:53	89					
9/30/2009	L.S. #81	Pump #2	81A8	0:00:54	0:01:42	1:51:08	0:01:14	89	3:09:47	189.78	877	166439.98	115.58
10/1/2009	L.S. #81	Pump #1	81A7	0:00:38	0:01:06	1:18:04	0:00:54	86					
10/1/2009	L.S. #81	Pump #2	81A8	0:00:54	0:01:30	1:36:34	0:01:08	85	2:54:38	174.63	877	153153.43	106.36
10/2/2009	L.S. #81	Pump #1	81A7	0:00:40	0:01:05	1:18:52	0:00:55	86					
10/2/2009	L.S. #81	Pump #2	81A8	0:00:50	0:01:26	1:39:00	0:01:08	87	2:57:52	177.87	877	155989.07	108.33
10/3/2009	L.S. #81	Pump #1	81A7	0:00:38	0:01:12	1:25:29	0:00:55	93					
10/3/2009	L.S. #81	Pump #2	81A8	0:00:48	0:01:44	1:48:17	0:01:09	93	3:13:46	193.77	877	169933.37	118.01
10/4/2009	L.S. #81	Pump #1	81A7	0:00:38	0:01:11	1:24:05	0:00:54	92					
10/4/2009	L.S. #81	Pump #2	81A8	0:00:48	0:01:32	1:45:59	0:01:09	91	3:10:04	190.07	877	166688.47	115.76
10/5/2009	L.S. #81	Pump #1	81A7	0:00:38	0:01:04	1:20:44	0:00:53	90					
10/5/2009	L.S. #81	Pump #2	81A8	0:00:48	0:01:30	1:37:05	0:01:04	90	2:57:49	177.82	877	155945.22	108.30
10/6/2009	L.S. #81	Pump #1	81A7	0:00:26	0:01:06	1:17:49	0:00:54	86					
10/6/2009	L.S. #81	Pump #2	81A8	0:00:24	0:01:12	1:25:30	0:00:59	86	2:43:19	163.32	877	143228.72	99.46
10/7/2009	L.S. #81	Pump #1	81A7	0:00:42	0:01:06	1:16:00	0:00:53	86					
10/7/2009	L.S. #81	Pump #2	81A8	0:00:44	0:01:22	1:30:49	0:01:03	86	2:46:49	166.82	877	146298.22	101.60
10/8/2009	L.S. #81	Pump #1	81A7	0:00:40	0:01:02	1:15:18	0:00:52	86					
10/8/2009	L.S. #81	Pump #2	81A8	0:00:44	0:01:19	1:30:39	0:01:03	86	2:45:57	165.95	877	145538.15	101.07
10/9/2009	L.S. #81	Pump #1	81A7	0:00:40	0:01:02	1:17:16	0:00:52	89					
10/9/2009	L.S. #81	Pump #2	81A8	0:00:46	0:01:23	1:32:53	0:01:01	90	2:50:09	170.15	877	149221.55	103.63
10/10/2009	L.S. #81	Pump #1	81A7	0:00:38	0:01:06	1:20:37	0:00:53	91					
10/10/2009	L.S. #81	Pump #2	81A8	0:00:46	0:01:23	1:37:32	0:01:04	91	2:58:09	178.15	877	156237.55	108.50
10/11/2009	L.S. #81	Pump #1	81A7	0:00:40	0:01:08	1:25:26	0:00:53	95					
10/11/2009	L.S. #81	Pump #2	81A8	0:00:44	0:01:28	1:44:45	0:01:06	94	3:10:11	190.18	877	166790.78	115.83
10/12/2009	L.S. #81	Pump #1	81A7	0:00:40	0:01:00	1:28:02	0:00:52	101					
10/12/2009	L.S. #81	Pump #2	81A8	0:00:46	0:01:20	1:47:37	0:01:03	102	3:15:39	195.65	877	171585.05	119.16
10/13/2009	L.S. #81	Pump #1	81A7	0:00:40	0:01:06	1:19:34	0:00:52	91					
10/13/2009	L.S. #81	Pump #2	81A8	0:00:46	0:01:24	1:39:14	0:01:04	92	2:58:48	178.80	877	156807.60	108.89

10/14/2009	L.S. #81	Pump #1	81A7	0:00:38	0:01:04	1:17:20	0:00:51	89					
10/14/2009	L.S. #81	Pump #2	81A8	0:00:47	0:01:18	1:28:58	0:00:59	89	2:46:18	166.30	877	145845.10	101.28
10/15/2009	L.S. #81	Pump #1	81A7	0:00:40	0:01:02	1:20:59	0:00:52	93					
10/15/2009	L.S. #81	Pump #2	81A8	0:00:46	0:01:18	1:37:27	0:01:02	94	2:58:26	178.43	877	156486.03	108.67
10/16/2009	L.S. #81	Pump #1	81A7	0:00:38	0:01:04	1:18:06	0:00:52	90					
10/16/2009	L.S. #81	Pump #2	81A8	0:00:44	0:01:17	1:32:18	0:01:02	89	2:50:24	170.40	877	149440.80	103.78
10/17/2009	L.S. #81	Pump #1	81A7	0:00:38	0:01:14	1:30:58	0:00:53	102					
10/17/2009	L.S. #81	Pump #2	81A8	0:00:44	0:01:28	1:45:29	0:01:01	103	3:16:27	196.45	877	172286.65	119.64
10/18/2009	L.S. #81	Pump #1	81A7	0:00:36	0:01:03	1:31:25	0:00:48	112					
10/18/2009	L.S. #81	Pump #2	81A8	0:00:42	0:01:16	1:43:04	0:00:55	111	3:14:29	194.48	877	170561.88	118.45
10/19/2009	L.S. #81	Pump #1	81A7	0:00:34	0:01:00	1:21:39	0:00:49	99					
10/19/2009	L.S. #81	Pump #2	81A8	0:00:09	0:01:10	1:29:14	0:00:53	100	2:50:53	170.88	877	149864.68	104.07
10/20/2009	L.S. #81	Pump #1	81A7	0:00:36	0:01:00	1:16:37	0:00:49	93					
10/20/2009	L.S. #81	Pump #2	81A8	0:00:42	0:01:05	1:23:39	0:00:53	93	2:40:16	160.27	877	140553.87	97.61
10/21/2009	L.S. #81	Pump #1	81A7	0:00:36	0:01:00	1:18:28	0:00:50	94					
10/21/2009	L.S. #81	Pump #2	81A8	0:00:40	0:01:14	1:29:57	0:00:57	94	2:48:25	168.42	877	147701.42	102.57
10/22/2009	L.S. #81	Pump #1	81A7	0:00:40	0:01:04	1:20:21	0:00:50	95					
10/22/2009	L.S. #81	Pump #2	81A8	0:00:48	0:01:14	1:35:09	0:01:00	95	2:55:30	175.50	877	153913.50	106.88
10/23/2009	L.S. #81	Pump #1	81A7	0:00:38	0:01:06	1:21:24	0:00:52	93					
10/23/2009	L.S. #81	Pump #2	81A8	0:00:42	0:01:18	1:34:34	0:01:00	94	2:55:58	175.97	877	154322.77	107.17
10/24/2009	L.S. #81	Pump #1	81A7	0:00:38	0:01:07	1:25:37	0:00:53	96					
10/24/2009	L.S. #81	Pump #2	81A8	0:00:43	0:01:14	1:34:42	0:00:59	96	3:00:19	180.32	877	158137.72	109.82
10/25/2009	L.S. #81	Pump #1	81A7	0:00:42	0:01:07	1:29:35	0:00:54	99					
10/25/2009	L.S. #81	Pump #2	81A8	0:00:42	0:01:20	1:39:22	0:01:00	98	3:08:57	188.95	877	165709.15	115.08
10/26/2009	L.S. #81	Pump #1	81A7	0:00:36	0:01:03	1:24:59	0:00:52	98					
10/26/2009	L.S. #81	Pump #2	81A8	0:00:42	0:01:15	1:33:48	0:00:57	98	2:58:47	178.78	877	156792.98	108.88
10/27/2009	L.S. #81	Pump #1	81A7	0:00:40	0:01:45	1:21:53	0:00:51	95					
10/27/2009	L.S. #81	Pump #2	81A8	0:00:14	0:01:08	1:29:09	0:00:55	96	2:51:02	171.03	877	149996.23	104.16
10/28/2009	L.S. #81	Pump #1	81A7	0:00:36	0:01:05	1:18:49	0:00:51	92					
10/28/2009	L.S. #81	Pump #2	81A8	0:00:42	0:01:07	1:25:01	0:00:56	91	2:43:50	163.83	877	143681.83	99.78
10/29/2009	L.S. #81	Pump #1	81A7	0:00:39	0:01:01	1:17:47	0:00:50	92					
10/29/2009	L.S. #81	Pump #2	81A8	0:00:42	0:01:08	1:28:27	0:00:57	92	2:46:14	166.23	877	145786.63	101.24
10/30/2009	L.S. #81	Pump #1	81A7	0:00:38	0:01:06	1:20:28	0:00:53	91					
10/30/2009	L.S. #81	Pump #2	81A8	0:00:42	0:01:06	1:23:38	0:00:55	91	2:44:06	164.10	877	143915.70	99.94
10/31/2009	L.S. #81	Pump #1	81A7	0:00:34	0:01:14	1:29:26	0:00:53	100					
10/31/2009	L.S. #81	Pump #2	81A8	0:00:40	0:01:24	1:42:01	0:01:00	101	3:11:27	191.45	877	167901.65	116.60
11/1/2009	L.S. #81	Pump #1	81A7	0:00:32	0:01:14	1:33:42	0:00:56	100					
11/1/2009	L.S. #81	Pump #2	81A8	0:00:44	0:01:25	1:42:04	0:01:01	99	3:15:46	195.77	877	171687.37	119.23
11/2/2009	L.S. #81	Pump #1	81A7	0:00:38	0:01:12	1:26:48	0:00:55	94					
11/2/2009	L.S. #81	Pump #2	81A8	0:00:40	0:01:18	1:33:26	0:00:59	94	3:00:14	180.23	877	158064.63	109.77
11/3/2009	L.S. #81	Pump #1	81A7	0:00:36	0:01:14	1:19:41	0:00:51	92					
11/3/2009	L.S. #81	Pump #2	81A8	0:00:40	0:01:13	1:26:56	0:00:56	93	2:46:37	166.62	877	146122.82	101.47
11/4/2009	L.S. #81	Pump #1	81A7	0:00:38	0:01:04	1:21:10	0:00:52	93					
11/4/2009	L.S. #81	Pump #2	81A8	0:00:42	0:01:16	1:27:56	0:00:56	93	2:49:06	169.10	877	148300.70	102.99
11/5/2009	L.S. #81	Pump #1	81A7	0:00:44	0:01:50	2:09:04	0:01:10	110					
11/5/2009	L.S. #81	Pump #2	81A8	0:00:51	0:01:42	2:11:28	0:01:12	109	4:20:32	260.53	877	228487.73	158.67
11/6/2009	L.S. #81	Pump #1	81A7	0:00:44	0:01:14	1:36:02	0:00:57	100					
11/6/2009	L.S. #81	Pump #2	81A8	0:00:46	0:01:19	1:41:56	0:01:01	99	3:17:58	197.97	877	173616.77	120.57
11/7/2009	L.S. #81	Pump #1	81A7	0:00:40	0:01:24	1:40:50	0:00:58	104					
11/7/2009	L.S. #81	Pump #2	81A8	0:00:42	0:01:24	1:45:04	0:01:00	104	3:25:54	205.90	877	180574.30	125.40
11/8/2009	L.S. #81	Pump #1	81A7	0:00:38	0:01:16	1:44:03	0:00:57	109					
11/8/2009	L.S. #81	Pump #2	81A8	0:00:44	0:01:22	1:49:37	0:01:00	109	3:33:40	213.67	877	187385.67	130.13
11/9/2009	L.S. #81	Pump #1	81A7	0:00:40	0:01:13	1:26:04	0:00:56	92					
11/9/2009	L.S. #81	Pump #2	81A8	0:00:43	0:01:12	1:32:23	0:00:59	93	2:58:27	178.45	877	156500.65	108.68
11/10/2009	L.S. #81	Pump #1	81A7	0:00:38	0:01:14	1:25:30	0:00:54	93					
11/10/2009	L.S. #81	Pump #2	81A8	0:00:43	0:01:12	1:29:22	0:00:57	94	2:54:52	174.87	877	153358.07	106.50
11/11/2009	L.S. #81	Pump #1	81A7	0:00:42	0:01:18	1:31:27	0:00:57	96					
11/11/2009	L.S. #81	Pump #2	81A8	0:00:42	0:01:20	1:40:06	0:01:01	97	3:11:33	191.55	877	167989.35	116.66
11/12/2009	L.S. #81	Pump #1	81A7	0:00:38	0:01:12	1:24:47	0:00:51	98					
11/12/2009	L.S. #81	Pump #2	81A8	0:00:44	0:01:18	1:40:42	0:01:01	98	3:05:29	185.48	877	162668.88	112.96
11/13/2009	L.S. #81	Pump #1	81A7	0:00:36	0:01:04	1:24:13	0:00:50	100					
11/13/2009	L.S. #81	Pump #2	81A8	0:00:44	0:01:29	1:47:50	0:01:04	101	3:12:03	192.05	877	168427.85	116.96
11/14/2009	L.S. #81	Pump #1	81A7	0:00:38	0:01:14	1:32:58	0:00:53	105					
11/14/2009	L.S. #81	Pump #2	81A8	0:00:40	0:01:24	1:43:36	0:00:59	105	3:16:34	196.57	877	172388.97	119.71
11/15/2009	L.S. #81	Pump #1	81A7	0:00:34	0:01:22	1:41:30	0:00:54	111					
11/15/2009	L.S. #81	Pump #2	81A8	0:00:38	0:01:39	1:54:48	0:01:02	110	3:36:18	216.30	877	189695.10	131.73
11/16/2009	L.S. #81	Pump #1	81A7	0:00:36	0:01:21	1:30:01	0:00:51	104					
11/16/2009	L.S. #81	Pump #2	81A8	0:00:40	0:01:07	1:36:22	0:00:55	103	3:06:23	186.38	877	163458.18	113.51
11/17/2009	L.S. #81	Pump #1	81A7	0:00:06	0:01:04	1:25:03	0:00:52	97					
11/17/2009	L.S. #81	Pump #2	81A8	0:00:44	0:01:19	1:42:00	0:01:03	96	3:07:03	187.05	877	164042.85	113.92
11/18/2009	L.S. #81	Pump #1	81A7	0:00:38	0:01:06	1:32:58	0:00:53	104					
11/18/2009	L.S. #81	Pump #2	81A8	0:00:42	0:01:18	1:45:24	0:01:01	103	3:18:22	198.37	877	173967.57	120.81
11/19/2009	L.S. #81	Pump #1	81A7	0:00:38	0:01:52	1:20:15	0:00:50	95					
11/19/2009	L.S. #81	Pump #2	81A8	0:00:25	0:01:36	1:37:11	0:01:00	97	2:57:26	177.43	877	155609.03	108.06
11/20/2009	L.S. #81	Pump #1	81A7	0:00:38	0:01:02	1:24:24	0:00:50	100					
11/20/2009	L.S. #81	Pump #2	81A8	0:00:44	0:01:12	1:38:57	0:00:59	99	3:03:21	183.35	877	160797.95	111.67
11/21/2009	L.S. #81	Pump #1	81A7	0:00:34	0:01:12	1:27:04	0:00:52	100					
11/21/2009	L.S. #81	Pump #2	81A8	0:00:44	0:01:21	1:37:54	0:00:58	100	3:04:58	184.97	877	162215.77	112.65
11/22/2009	L.S. #81	Pump #1	81A7	0:00:38	0:01:16	1:38:18	0:00:56	105					
11/22/2009	L.S. #81	Pump #2	81A8	0:00:37	0:01:12	1:39:59	0:00:57	105	3:18:17	198.28	877	173894.48	120.76
11/23/2009	L.S. #81	Pump #1	81A7	0:00:40	0:01:04	1:23:08	0:00:52	95					
11/23/2009	L.S. #81	Pump #2	81A8	0:00:42	0:01:10	1:27:36	0:00:55	94	2:50:44	170.73	877	149733.13	103.98
11/24/2009	L.S. #81	Pump #1	81A7	0:00:40	0:01:04	1:19:22	0:00:50	93					
11/24/2009	L.S. #81	Pump #2	81A8	0:00:42	0:01:06	1:24:46	0:00:54	94	2:44:08	164.13	877	143944.93	99.96
11/25/2009	L.S. #81	Pump #1	81A7	0:00:40	0:03:08	1:36:40	0:00:59	97					
11/25/2009	L.S. #81	Pump #2	81A8	0:00:41	0:01:17	1:43:05	0:01:03	98	3:19:45	199.75	877	175180.75	121.65
11/26/2009	L.S. #81	Pump #1	81A7	0:00:40	0:01:24	1:40:27	0:01:00	100					
11/26/2009	L.S. #81	Pump #2	81A8	0:00:48	0:01:40	1:49:54	0:01:06	99	3:30:21	210.35	877	184476.95	128.11
11/27/2009	L.S. #81	Pump #1	81A7	0:00:38	0:01:05	1:23:42	0:00:50	99					
11/27/2009	L.S. #81	Pump #2	81A8	0:00:40	0:01:12	1:29:05	0:00:53	99	2:52:47	172.78	877	151530.98	105.23
11/28/2009	L.S. #81	Pump #1	81A7	0:00:36	0:01:08	1:26:41	0:00:50	102					
11/28/2009	L.S. #81	Pump #2	81A8	0:00:38	0:01:12	1:32:05	0:00:53	103	2:58:46	178.77	877	156778.37	108.87
11/29/2009	L.S. #81	Pump #1	81A7	0:00:34	0:01:08	1:31:02	0:00:51	105					
11/29/2009	L.S. #81	Pump #2	81A8	0:00:37	0:01:08	1:32:07	0:00:52	105	3:03:09	183.15	877	160622.55	111.54
11/30/2009	L.S. #81	Pump #1	81A7	0:00:36	0:01:02	1:25:02	0:00:51	100					
11/30/2009	L.S. #81	Pump #2	81A8	0:00:38	0:01:06	1:29:13	0:00:53	100	2:54:15	174.25	877	152817.25	106.12
12/1/2009	L.S. #81	Pump #1	81A7	0:00:36	0:01:04	1:17:06	0:00:49	93					
12/1/2009	L.S. #81	Pump #2	81A8	0:00:42	0:01:08	1:24:41	0:00:54	94	2:41:47	161.78	877	141883.98	98.53
12/2/2009	L.S. #81	Pump #1	81A7	0:00:34	0:01:04	1:18:48	0:00:50	93					
12/2/2009	L.S. #81	Pump #2	81A8	0:00:42	0:01:05	1:22:43	0:00:53	93	2:41:31	161.52	877	141650.12	98.37
12/3/2009	L.S. #81	Pump #1	81A7	0:00:36	0:01:04	1:17:09	0:00:52	88					
12/3/2009	L.S. #81	Pump #2	81A8	0:00:42	0:01:08	1:17:10	0:00:52	88	2:34:19	154.32	877	135335.72	93.98
12/4/2009	L.S. #81	Pump #1	81A7	0:00:39	0:07:15	1:22:49	0:00:55	89					
12/4/2009	L.S. #81	Pump #2	81A8	0:00:40	0:01:07	1:21:41	0:00:55	89	2:44:30	164.50	877	144266.50	100.19
12/5/2009	L.S. #81	Pump #1	81A7	0:00:40	0:01:10	1:25:48	0:00:53	97					
12/5/2009	L.S. #81	Pump #2	81A8	0:00:44	0:01:20	1:31:36	0:00:56	97	2:57:24	177.40	877	155579.80	108.04
12/6/2009	L.S. #81	Pump #1	81A7	0:00:38	0:01:14	1:29:02	0:00:52	101					
12/6/2009	L.S. #81	Pump #2	81A8	0:00:40	0:01:13	1:36:26	0:00:57	101	3:05:28	185.47	877	162654.27	112.95
12/7/2009	L.S. #81	Pump #1	81A7	0:00:38	0:01:10	1:22:01	0:00:54	91					
12/7/2009	L.S. #81	Pump #2	81A8	0:00:40	0:01:17	1:29:13	0:00:58	90	2:51:14	171.23	877	150171.63	104.29
12/8/2009	L.S. #81	Pump #1	81A7	0:00:42	0:01:05	1:19:59	0:00:53	90					
12/8/2009	L.S. #81	Pump #2	81A8	0:00:41	0:01:10	1:27:52	0:00:57	91	2:47:51	167.85	877	147204.45	102.23
12/9/2009	L.S. #81	Pump #1	81A7	0:00:40	0:01:08	1:18:37	0:00:53	89					
12/9/2009	L.S. #81	Pump #2	81A8	0:00:45	0:01:13	1:26:03	0:00:58	88	2:44:40	164.67	877	144412.67	100.29

12/10/2009	L.S. #81	Pump #1	81A7	0:00:40	0:01:04	1:17:23	0:00:52	89					
12/10/2009	L.S. #81	Pump #2	81A8	0:00:46	0:01:23	1:36:01	0:01:04	89	2:53:24	173.40	877	152071.80	105.61
12/11/2009	L.S. #81	Pump #1	81A7	0:00:38	0:01:10	1:20:03	0:00:51	94					
12/11/2009	L.S. #81	Pump #2	81A8	0:00:46	0:01:33	1:40:08	0:01:03	94	3:00:11	180.18	877	158020.78	109.74
12/12/2009	L.S. #81	Pump #1	81A7	0:00:34	0:01:06	1:27:32	0:00:54	97					
12/12/2009	L.S. #81	Pump #2	81A8	0:00:46	0:01:32	1:48:16	0:01:06	98	3:15:48	195.80	877	171716.60	119.25
12/13/2009	L.S. #81	Pump #1	81A7	0:00:42	0:01:27	1:35:10	0:00:57	99					
12/13/2009	L.S. #81	Pump #2	81A8	0:00:48	0:01:46	1:56:25	0:01:10	99	3:31:35	211.58	877	185558.58	128.86
12/14/2009	L.S. #81	Pump #1	81A7	0:00:36	0:01:04	1:19:12	0:00:50	94					
12/14/2009	L.S. #81	Pump #2	81A8	0:00:44	0:01:20	1:36:03	0:01:01	94	2:55:15	175.25	877	153694.25	106.73
12/15/2009	L.S. #81	Pump #1	81A7	0:00:38	0:01:02	1:15:26	0:00:52	87					
12/15/2009	L.S. #81	Pump #2	81A8	0:00:44	0:01:18	1:32:25	0:01:03	88	2:47:51	167.85	877	147204.45	102.23
12/16/2009	L.S. #81	Pump #1	81A7	0:00:40	0:01:06	1:20:30	0:00:54	88					
12/16/2009	L.S. #81	Pump #2	81A8	0:00:50	0:01:22	1:37:43	0:01:07	87	2:58:13	178.22	877	156296.02	108.54
12/17/2009	L.S. #81	Pump #1	81A7	0:00:42	0:03:55	2:45:20	0:01:04	86					
12/17/2009	L.S. #81	Pump #2	81A8	0:00:44	0:08:50	3:23:11	0:01:17	86	6:08:31	368.52	877	323189.12	224.44
12/18/2009	L.S. #81	Pump #1	81A7	0:01:21	0:29:19	4:07:07	0:04:40	39					
12/18/2009	L.S. #81	Pump #2	81A8	0:01:18	0:29:41	7:06:14	0:02:53	125	11:13:21	673.35	877	590527.95	410.09
12/19/2009	L.S. #81	Pump #1	81A7	0:00:00	0:00:00	0:00:00	0:00:00	0					
12/19/2009	L.S. #81	Pump #2	81A8	0:00:52	0:02:18	5:19:14	0:01:27	218	5:19:14	319.23	877	279967.63	194.42
12/20/2009	L.S. #81	Pump #1	81A7	0:00:00	0:00:00	0:00:00	0:00:00	0					
12/20/2009	L.S. #81	Pump #2	81A8	0:00:42	0:01:44	4:11:53	0:01:08	222	4:11:53	251.88	877	220901.68	153.40
12/21/2009	L.S. #81	Pump #1	81A7	0:00:46	0:01:00	0:01:46	0:00:53	2					
12/21/2009	L.S. #81	Pump #2	81A8	0:00:42	0:03:04	3:54:17	0:01:05	215	3:56:03	236.05	877	207015.85	143.76
12/22/2009	L.S. #81	Pump #1	81A7	0:00:00	0:00:00	0:00:00	0:00:00	0					
12/22/2009	L.S. #81	Pump #2	81A8	0:00:44	0:01:24	3:35:14	0:01:01	208	3:35:14	215.23	877	188759.63	131.08
12/23/2009	L.S. #81	Pump #1	81A7	0:00:20	0:01:04	0:48:21	0:00:49	59					
12/23/2009	L.S. #81	Pump #2	81A8	0:00:42	0:04:26	2:33:29	0:01:05	140	3:21:50	201.83	877	177007.83	122.92
12/24/2009	L.S. #81	Pump #1	81A7	0:00:36	0:01:10	1:37:30	0:00:52	111					
12/24/2009	L.S. #81	Pump #2	81A8	0:00:44	0:01:42	2:08:52	0:01:09	112	3:46:22	226.37	877	198523.57	137.86
12/25/2009	L.S. #81	Pump #1	81A7	0:00:36	0:01:10	1:26:17	0:00:51	100					
12/25/2009	L.S. #81	Pump #2	81A8	0:00:48	0:01:40	1:59:54	0:01:11	100	3:26:11	206.18	877	180822.78	125.57
12/26/2009	L.S. #81	Pump #1	81A7	0:00:38	0:01:10	1:22:47	0:00:49	101					
12/26/2009	L.S. #81	Pump #2	81A8	0:00:48	0:01:38	1:55:22	0:01:09	100	3:18:09	198.15	877	173777.55	120.68
12/27/2009	L.S. #81	Pump #1	81A7	0:00:36	0:01:10	1:17:25	0:00:49	93					
12/27/2009	L.S. #81	Pump #2	81A8	0:00:40	0:01:27	1:32:46	0:00:59	93	2:50:11	170.18	877	149250.78	103.65
12/28/2009	L.S. #81	Pump #1	81A7	0:00:36	0:01:02	1:20:31	0:00:47	102					
12/28/2009	L.S. #81	Pump #2	81A8	0:00:39	0:01:14	1:35:21	0:00:56	102	2:55:52	175.87	877	154235.07	107.11
12/29/2009	L.S. #81	Pump #1	81A7	0:00:32	0:01:02	1:19:09	0:00:45	105					
12/29/2009	L.S. #81	Pump #2	81A8	0:00:35	0:01:18	1:37:03	0:00:55	105	2:56:12	176.20	877	154527.40	107.31
12/30/2009	L.S. #81	Pump #1	81A7	0:00:32	0:01:00	1:22:01	0:00:46	106					
12/30/2009	L.S. #81	Pump #2	81A8	0:00:38	0:01:24	1:46:46	0:01:00	106	3:08:47	188.78	877	165562.98	114.97
12/31/2009	L.S. #81	Pump #1	81A7	0:00:33	0:01:04	1:18:57	0:00:48	98					
12/31/2009	L.S. #81	Pump #2	81A8	0:00:44	0:01:25	1:45:36	0:01:04	98	3:04:33	184.55	877	161850.35	112.40
1/1/2010	L.S. #81	Pump #1	81A7	0:00:36	0:06:02	1:16:18	0:00:49	92					
1/1/2010	L.S. #81	Pump #2	81A8	0:00:46	0:05:54	1:37:14	0:01:03	92	2:53:32	173.53	877	152188.73	105.69
1/2/2010	L.S. #81	Pump #1	81A7	0:00:32	0:01:00	1:12:56	0:00:44	99					
1/2/2010	L.S. #81	Pump #2	81A8	0:00:40	0:01:24	1:33:41	0:00:57	98	2:46:37	166.62	877	146122.82	101.47
1/3/2010	L.S. #81	Pump #1	81A7	0:00:30	0:00:55	1:13:50	0:00:41	106					
1/3/2010	L.S. #81	Pump #2	81A8	0:00:38	0:01:15	1:35:31	0:00:54	106	2:49:21	169.35	877	148519.95	103.14
1/4/2010	L.S. #81	Pump #1	81A7	0:00:30	0:00:50	1:06:27	0:00:40	98					
1/4/2010	L.S. #81	Pump #2	81A8	0:00:38	0:01:06	1:25:03	0:00:51	99	2:31:30	151.50	877	132865.50	92.27
1/5/2010	L.S. #81	Pump #1	81A7	0:00:30	0:00:50	1:07:05	0:00:39	101					
1/5/2010	L.S. #81	Pump #2	81A8	0:00:37	0:01:25	1:27:32	0:00:52	101	2:34:37	154.62	877	135598.82	94.17
1/6/2010	L.S. #81	Pump #1	81A7	0:00:06	0:03:22	1:12:54	0:00:31	141					
1/6/2010	L.S. #81	Pump #2	81A8	0:00:02	0:04:26	1:33:14	0:00:41	136	2:46:08	166.13	877	145698.93	101.18
1/7/2010	L.S. #81	Pump #1	81A7	0:00:08	0:03:14	1:08:02	0:00:39	104					
1/7/2010	L.S. #81	Pump #2	81A8	0:00:06	0:04:02	1:26:24	0:00:48	106	2:34:26	154.43	877	135438.03	94.05
1/8/2010	L.S. #81	Pump #1	81A7	0:00:28	0:00:52	1:09:31	0:00:40	102					
1/8/2010	L.S. #81	Pump #2	81A8	0:00:36	0:01:08	1:29:09	0:00:52	101	2:38:40	158.67	877	139150.67	96.63
1/9/2010	L.S. #81	Pump #1	81A7	0:00:32	0:00:48	1:10:29	0:00:38	109					
1/9/2010	L.S. #81	Pump #2	81A8	0:00:38	0:01:06	1:34:41	0:00:51	110	2:45:10	165.17	877	144851.17	100.59
1/10/2010	L.S. #81	Pump #1	81A7	0:00:16	0:02:44	1:15:38	0:00:40	113					
1/10/2010	L.S. #81	Pump #2	81A8	0:00:36	0:02:36	1:43:43	0:00:55	112	2:59:21	179.35	877	157289.95	109.23
1/11/2010	L.S. #81	Pump #1	81A7	0:00:06	0:03:38	1:33:17	0:00:30	181					
1/11/2010	L.S. #81	Pump #2	81A8	0:00:02	0:03:14	1:25:09	0:00:41	122	2:58:26	178.43	877	156486.03	108.67
1/12/2010	L.S. #81	Pump #1	81A7	0:00:02	0:03:06	1:12:49	0:00:37	118					
1/12/2010	L.S. #81	Pump #2	81A8	0:00:02	0:03:16	1:45:45	0:00:54	117	2:58:34	178.57	877	156602.97	108.75
1/13/2010	L.S. #81	Pump #1	81A7	0:00:30	0:00:46	1:04:54	0:00:38	102					
1/13/2010	L.S. #81	Pump #2	81A8	0:00:40	0:01:13	1:33:20	0:00:55	101	2:38:14	158.23	877	138770.63	96.37
1/14/2010	L.S. #81	Pump #1	81A7	0:00:30	0:00:50	1:03:41	0:00:39	96					
1/14/2010	L.S. #81	Pump #2	81A8	0:00:38	0:01:06	1:25:13	0:00:52	98	2:28:54	148.90	877	130585.30	90.68
1/15/2010	L.S. #81	Pump #1	81A7	0:00:32	0:00:54	1:07:09	0:00:42	94					
1/15/2010	L.S. #81	Pump #2	81A8	0:00:38	0:01:10	1:26:23	0:00:55	94	2:33:32	153.53	877	134648.73	93.51
1/16/2010	L.S. #81	Pump #1	81A7	0:00:32	0:00:56	1:10:51	0:00:44	96					
1/16/2010	L.S. #81	Pump #2	81A8	0:00:38	0:01:16	1:31:11	0:00:58	94	2:42:02	162.03	877	142103.23	98.68
1/17/2010	L.S. #81	Pump #1	81A7	0:00:34	0:00:58	1:09:03	0:00:46	89					
1/17/2010	L.S. #81	Pump #2	81A8	0:00:40	0:01:30	1:29:57	0:00:59	91	2:39:00	159.00	877	139443.00	96.84
1/18/2010	L.S. #81	Pump #1	81A7	0:00:34	0:00:57	1:07:30	0:00:44	92					
1/18/2010	L.S. #81	Pump #2	81A8	0:00:40	0:07:25	1:35:23	0:01:02	92	2:42:53	162.88	877	142848.68	99.20
1/19/2010	L.S. #81	Pump #1	81A7	0:00:22	0:00:52	1:08:16	0:00:41	98					
1/19/2010	L.S. #81	Pump #2	81A8	0:00:22	0:01:04	1:22:24	0:00:49	99	2:30:40	150.67	877	132134.67	91.76
1/20/2010	L.S. #81	Pump #1	81A7	0:00:32	0:10:47	1:21:16	0:00:54	90					
1/20/2010	L.S. #81	Pump #2	81A8	0:00:36	0:08:18	1:24:06	0:00:56	89	2:45:22	165.37	877	145026.57	100.71
1/21/2010	L.S. #81	Pump #1	81A7	0:00:33	0:00:57	1:07:39	0:00:44	92					
1/21/2010	L.S. #81	Pump #2	81A8	0:00:38	0:01:04	1:22:25	0:00:53	93	2:30:04	150.07	877	131608.47	91.39
1/22/2010	L.S. #81	Pump #1	81A7	0:00:36	0:00:52	1:08:03	0:00:44	91					
1/22/2010	L.S. #81	Pump #2	81A8	0:00:40	0:08:29	1:37:21	0:01:05	89	2:45:24	165.40	877	145055.80	100.73
1/23/2010	L.S. #81	Pump #1	81A7	0:00:36	0:00:56	1:14:30	0:00:45	99					
1/23/2010	L.S. #81	Pump #2	81A8	0:00:42	0:01:20	1:36:43	0:00:58	99	2:51:13	171.22	877	150157.02	104.28
1/24/2010	L.S. #81	Pump #1	81A7	0:00:34	0:00:58	1:19:28	0:00:46	103					
1/24/2010	L.S. #81	Pump #2	81A8	0:00:42	0:01:20	1:42:04	0:01:00	102	3:01:32	181.53	877	159204.73	110.56
1/25/2010	L.S. #81	Pump #1	81A7	0:00:36	0:00:58	1:06:55	0:00:44	91					
1/25/2010	L.S. #81	Pump #2	81A8	0:00:42	0:01:08	1:26:20	0:00:56	92	2:33:15	153.25	877	134400.25	93.33
1/26/2010	L.S. #81	Pump #1	81A7	0:00:32	0:07:41	1:26:49	0:00:52	99					
1/26/2010	L.S. #81	Pump #2	81A8	0:00:40	0:01:08	1:29:34	0:00:53	100	2:56:23	176.38	877	154688.18	107.42
1/27/2010	L.S. #81	Pump #1	81A7	0:00:30	0:00:52	1:08:01	0:00:42	97					
1/27/2010	L.S. #81	Pump #2	81A8	0:00:36	0:01:02	1:22:12	0:00:51	96	2:30:13	150.22	877	131740.02	91.49
1/28/2010	L.S. #81	Pump #1	81A7	0:00:32	0:00:51	1:03:30	0:00:41	92					
1/28/2010	L.S. #81	Pump #2	81A8	0:00:38	0:01:06	1:18:40	0:00:51	92	2:22:10	142.17	877	124680.17	86.58
1/29/2010	L.S. #81	Pump #1	81A7	0:00:32	0:00:52	1:03:40	0:00:41	91					
1/29/2010	L.S. #81	Pump #2	81A8	0:00:36	0:01:00	1:13:11	0:00:48	90	2:16:51	136.85	877	120017.45	83.35
1/30/2010	L.S. #81	Pump #1	81A7	0:00:32	0:00:56	1:14:44	0:00:44	100					
1/30/2010	L.S. #81	Pump #2	81A8	0:00:38	0:01:12	1:26:43	0:00:52	99	2:41:27	161.45	877	141591.65	98.33
1/31/2010	L.S. #81	Pump #1	81A7	0:00:34	0:00:56	1:11:40	0:00:44	97					
1/31/2010	L.S. #81	Pump #2	81A8	0:00:38	0:03:14	1:26:31	0:00:52	98	2:38:11	158.18	877	138726.78	96.34
2/1/2010	L.S. #81	Pump #1	81A7	0:00:32	0:00:57	1:06:05	0:00:45	88					
2/1/2010	L.S. #81	Pump #2	81A8	0:00:37	0:01:02	1:17:16	0:00:52	88	2:23:21	143.35	877	125717.95	87.30
2/2/2010	L.S. #81	Pump #1	81A7	0:00:36	0:00:58	1:08:43	0:00:47	87					
2/2/2010	L.S. #81	Pump #2	81A8	0:00:41	0:01:08	1:18:38	0:00:54	87	2:27:21	147.35	877	129225.95	89.74
2/3/2010	L.S. #81	Pump #1	81A7	0:00:36	0:00:55	1:04:27	0:00:44	86					
2/3/2010	L.S. #81	Pump #2	81A8	0:00:40	0:01:04	1:16:50	0:00:52	88	2:21:17	141.28	877	123905.48	86.05
2/4/2010	L.S. #81	Pump #1	81A7	0:00:32	0:03:24	1:05:17	0:00:44	88					
2/4/2010	L.S. #81	Pump #2	81A8	0:00:36	0:01:00	1:13:04	0:00:49	88	2:18:21	138.35	877	121332.95	84.26

2/5/2010	L.S. #81	Pump #1	81A7	0:00:32	0:08:06	1:10:54	0:00:49	86					
2/5/2010	L.S. #81	Pump #2	81A8	0:00:38	0:02:52	1:16:02	0:00:51	88	2:26:56	146.93	877	128860.53	89.49
2/6/2010	L.S. #81	Pump #1	81A7	0:00:34	0:00:56	1:09:45	0:00:43	95					
2/6/2010	L.S. #81	Pump #2	81A8	0:00:40	0:07:20	1:28:54	0:00:54	97	2:38:39	158.65	877	139136.05	96.62
2/7/2010	L.S. #81	Pump #1	81A7	0:00:32	0:00:56	1:10:01	0:00:41	101					
2/7/2010	L.S. #81	Pump #2	81A8	0:00:34	0:01:05	1:24:48	0:00:51	99	2:34:49	154.82	877	135774.22	94.29
2/8/2010	L.S. #81	Pump #1	81A7	0:00:30	0:00:51	1:06:24	0:00:41	96					
2/8/2010	L.S. #81	Pump #2	81A8	0:00:35	0:01:15	1:22:40	0:00:52	95	2:29:04	149.07	877	130731.47	90.79
2/9/2010	L.S. #81	Pump #1	81A7	0:00:32	0:00:50	1:06:52	0:00:42	94					
2/9/2010	L.S. #81	Pump #2	81A8	0:00:38	0:03:40	1:30:39	0:00:57	95	2:37:31	157.52	877	138142.12	95.93
2/10/2010	L.S. #81	Pump #1	81A7	0:00:32	0:00:50	1:06:27	0:00:41	97					
2/10/2010	L.S. #81	Pump #2	81A8	0:00:40	0:01:02	1:22:35	0:00:50	98	2:29:02	149.03	877	130702.23	90.77
2/11/2010	L.S. #81	Pump #1	81A7	0:00:30	0:00:48	1:05:32	0:00:40	97					
2/11/2010	L.S. #81	Pump #2	81A8	0:00:36	0:07:08	1:21:47	0:00:51	95	2:27:19	147.32	877	129196.72	89.72
2/12/2010	L.S. #81	Pump #1	81A7	0:00:30	0:00:56	1:04:09	0:00:41	91					
2/12/2010	L.S. #81	Pump #2	81A8	0:00:32	0:03:36	1:18:45	0:00:51	92	2:22:54	142.90	877	125323.30	87.03
2/13/2010	L.S. #81	Pump #1	81A7	0:00:32	0:00:56	1:11:28	0:00:42	102					
2/13/2010	L.S. #81	Pump #2	81A8	0:00:36	0:01:13	1:22:27	0:00:48	102	2:33:55	153.92	877	134984.92	93.74
2/14/2010	L.S. #81	Pump #1	81A7	0:00:04	0:00:57	1:11:25	0:00:42	102					
2/14/2010	L.S. #81	Pump #2	81A8	0:00:34	0:01:10	1:20:53	0:00:47	102	2:32:18	152.30	877	133567.10	92.75
2/15/2010	L.S. #81	Pump #1	81A7	0:00:30	0:07:19	1:15:01	0:00:47	95					
2/15/2010	L.S. #81	Pump #2	81A8	0:00:36	0:08:11	1:43:52	0:01:04	97	2:58:53	178.88	877	156880.68	108.94
2/16/2010	L.S. #81	Pump #1	81A7	0:00:32	0:03:52	1:07:58	0:00:43	94					
2/16/2010	L.S. #81	Pump #2	81A8	0:00:36	0:01:04	1:17:03	0:00:49	94	2:25:01	145.02	877	127179.62	88.32
2/17/2010	L.S. #81	Pump #1	81A7	0:00:32	0:01:06	1:05:54	0:00:40	98					
2/17/2010	L.S. #81	Pump #2	81A8	0:00:34	0:10:26	1:31:17	0:00:55	99	2:37:11	157.18	877	137849.78	95.73
2/18/2010	L.S. #81	Pump #1	81A7	0:00:30	0:00:48	1:04:44	0:00:40	97					
2/18/2010	L.S. #81	Pump #2	81A8	0:00:34	0:01:02	1:16:19	0:00:46	98	2:21:03	141.05	877	123700.85	85.90
2/19/2010	L.S. #81	Pump #1	81A7	0:00:28	0:00:47	1:07:39	0:00:39	102					
2/19/2010	L.S. #81	Pump #2	81A8	0:00:32	0:00:59	1:17:39	0:00:46	101	2:25:18	145.30	877	127428.10	88.49
2/20/2010	L.S. #81	Pump #1	81A7	0:00:30	0:00:53	1:11:16	0:00:41	102					
2/20/2010	L.S. #81	Pump #2	81A8	0:00:36	0:01:16	1:29:27	0:00:52	103	2:40:43	160.72	877	140948.52	97.88
2/21/2010	L.S. #81	Pump #1	81A7	0:00:32	0:08:08	1:21:30	0:00:47	103					
2/21/2010	L.S. #81	Pump #2	81A8	0:00:36	0:01:04	1:26:24	0:00:50	103	2:47:54	167.90	877	147248.30	102.26
2/22/2010	L.S. #81	Pump #1	81A7	0:00:32	0:00:50	1:06:17	0:00:42	94					
2/22/2010	L.S. #81	Pump #2	81A8	0:00:36	0:01:06	1:21:13	0:00:51	94	2:27:30	147.50	877	129357.50	89.83
2/23/2010	L.S. #81	Pump #1	81A7	0:00:18	0:00:56	1:05:15	0:00:44	88					
2/23/2010	L.S. #81	Pump #2	81A8	0:00:10	0:01:08	1:18:55	0:00:53	88	2:24:10	144.17	877	126434.17	87.80
2/24/2010	L.S. #81	Pump #1	81A7	0:00:34	0:00:56	1:05:48	0:00:45	87					
2/24/2010	L.S. #81	Pump #2	81A8	0:00:36	0:01:16	1:28:03	0:01:00	88	2:33:51	153.85	877	134926.45	93.70
2/25/2010	L.S. #81	Pump #1	81A7	0:00:32	0:00:53	1:07:44	0:00:41	97					
2/25/2010	L.S. #81	Pump #2	81A8	0:00:42	0:01:12	1:32:06	0:00:56	98	2:39:50	159.83	877	140173.83	97.34
2/26/2010	L.S. #81	Pump #1	81A7	0:00:30	0:00:50	1:05:08	0:00:40	96					
2/26/2010	L.S. #81	Pump #2	81A8	0:00:38	0:01:42	1:29:00	0:00:55	97	2:34:08	154.13	877	135174.93	93.87
2/27/2010	L.S. #81	Pump #1	81A7	0:00:30	0:08:52	1:21:38	0:00:46	105					
2/27/2010	L.S. #81	Pump #2	81A8	0:00:36	0:03:08	1:44:07	0:00:58	106	3:05:45	185.75	877	162902.75	113.13
2/28/2010	L.S. #81	Pump #1	81A7	0:00:30	0:00:54	1:13:53	0:00:43	103					
2/28/2010	L.S. #81	Pump #2	81A8	0:00:38	0:02:58	1:45:48	0:01:01	104	2:59:41	179.68	877	157582.28	109.43
3/1/2010	L.S. #81	Pump #1	81A7	0:00:30	0:00:50	1:07:27	0:00:40	99					
3/1/2010	L.S. #81	Pump #2	81A8	0:00:36	0:01:18	1:35:22	0:00:57	100	2:42:49	162.82	877	142790.22	99.16
Totals	**L.S. #81**	**Pump #1**	**81A7**	**0:00:02**	**2:18:04**	**487:37:55**	**0:00:51**	**34186**					
Totals	**L.S. #81**	**Pump #2**	**81A8**	**0:00:02**	**2:37:14**	**612:06:40**	**0:01:02**	**35250**					

Total Volume (gpd)	57868479.58
Total daily Flow (gpm)	40186.44
Average Daily Flow (gpm)	110.10

Appendix B

Connection Pressures

Downloaded Data - Wednesday, March 24, 2010

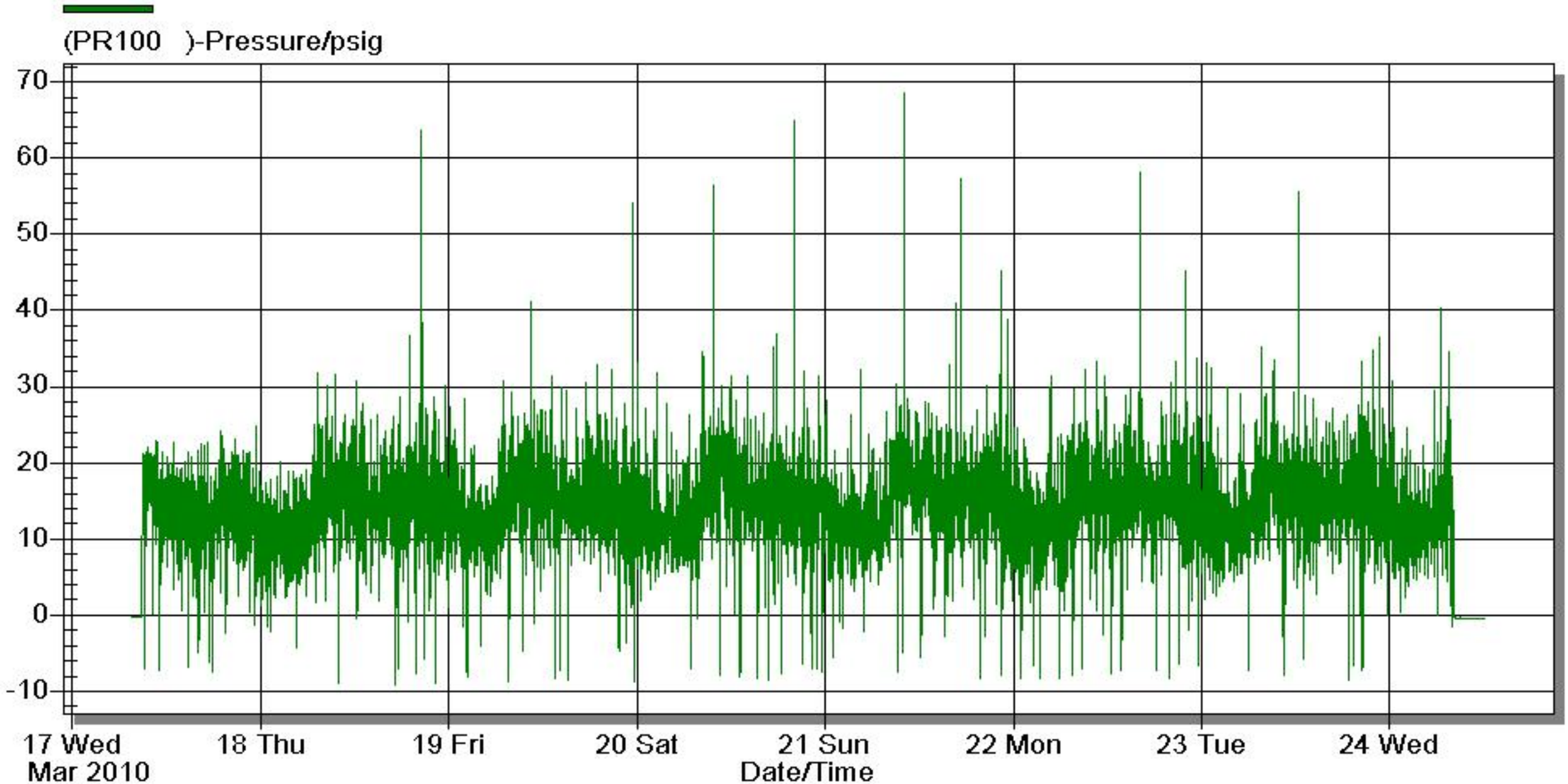

Appendix C

EP-1115

SYSTEM

REQUIREMENTS

EP-1100 SERIES APPLICATIONS

Multiple Applications

The EP-1100 Series keeps surfaces free of build-up and adds oxygen to:

- STORM WATER: Aerate and remove bio-organic build-up
- LIFT STATION: Clean lift station & recondition wastewater
- CLARIFIER: Aerate and keep free of build-up
- WWTP: Homogenize and oxygenate sludge pits

There are three different size EP-1100 models:
2" and 1.5" for solids handling and 1" for water applications *(see below).*

STORM WATER

LIFT STATION

CLARIFIER

WWTP

Tap Discharge Main or Dedicated Pump

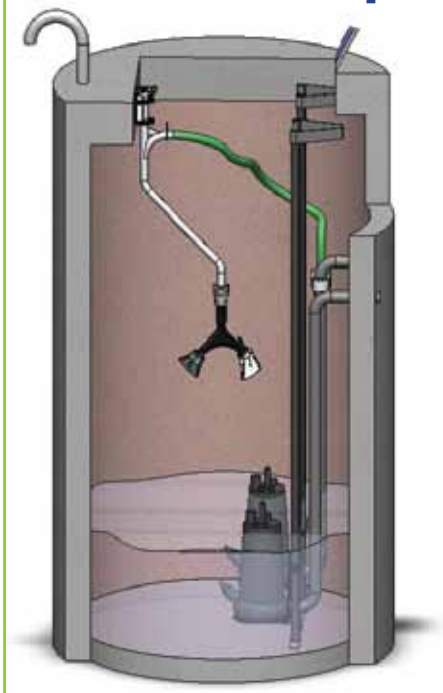

In addition to models that tap discharge mains, EP-1100-P series models include a dedicated grinder pump. These are used for low flow stations or where tapping the discharge main is not advised.

Lower Dosing Volume & Save Money

The EP-1100 Series systems provide an input for feeding chemical, organic, or biological augmentation materials.

High efficiency mixing within the EP and recycling back to the well lowers dosing volume, saving money.

Chemical Input Feed Point

EP-1100 SERIES SYSTEM REQUIREMENTS AND SPECIFICATIONS

System Overview		Water-Only Applications EP-1107	EP-1110	EP-1110-Pxxx (See Pump Systems, below)	EP-1115	EP-1115-Pxxx (See Pump Systems, below)	EP-1120	EP-1120-Pxxx (See Pump Systems, below)
Dual Output System, Patent Pending		0.75" (19 mm)	1.0" (25mm)	1.0" (25 mm)	1.5" (38 mm)	1.5" (38 mm)	2.0" (51 mm)	2.0" (51 mm)
Head Assembly, Composite Head, Sealed Rotary Bearing Assembly, 316 Stainless steel		EP-HA1107	EP-HA1110	EP-HA1110	EP-HA1115	EP-HA1115	EP-HA1120	EP-HA1120
Mounting Bracket, Dual Camlock, Safety Rod, 316 Stainless Steel		EP-MB1315	EP-MB1315	EP-MB1315 (2)	EP-MB1315	EP-MB1315 (2)	EP-MB1320	EP-MB1320 (2)
Feed Mast, NPT thread, Lifting Handle, 1" Liquid Injection Port/Bolt		EP-FM1315	EP-FM1315	EP-FM1315 (2)	EP-FM1315	EP-FM1315 (2)	EP-FM1320	EP-FM1320 (2)
Pump, Centrifugal Grinder, 2 or 5 hp (see below)		None	None	1	None	1	None	1
Control Panel & Timer (see below)		None	None	1	None	1	None	1
Wastewater Application		Not Applicable	Must use dedicated grinder pump	Dedicated pump	Single or dual discharge main tap	Dedicated pump	Single or dual discharge main tap	Dedicated pump
Water-Only Application		Yes	Yes	Not Applicable	Not Applicable	Not Applicable	Not Applicable	Not Applicable
System Operating Requirements								
Flow: gallons / minute at ≥ 4 psi, 25 rpm	1 gpm = 3.8 lpm	35 gpm	49 gpm	49 gpm	72 gpm	72 gpm	86 gpm	86 gpm
Flow: gallons / minute at ≥ 4 psi, 18 rpm	1 gpm = 3.8 lpm	35 gpm	46 gpm	46 gpm	67 gpm	67 gpm	79 gpm	79 gpm
Optimum Rotational Speed		25 rpm	25 rpm	25 rpm	25 rpm	25 rpm	25 rpm	25 rpm
Pump Horsepower	*Pump part of system	≥ 2 hp	≥ 2 hp	2 hp*	≥ 5 hp	5 hp*	≥ 20 hp	5 hp*
Pump Run Time Minimum per Day		≥ 5%	≥ 5%	≥ 5%	≥ 5%	≥ 5%	≥ 5%	≥ 5%
Discharge Main Diameter	1 inches = 25.4 mm	≥ 1 inches	≥ 2 inches	Not Applicable	≥ 4 inches	Not Applicable	≥ 8 inches	Not Applicable
Optimum / Min. Position above High Float	1 foot = 0.31M	4 feet / 1 foot	4 feet / 1 foot	4 feet / 1 foot	4 feet / 1 foot	4 feet / 1 foot	4 feet / 1 foot	4 feet / 1 foot
Wet Well Minimum Diameter Required	(feet)	≥6	≥6	≥6	≥6	≥6	≥8	≥8
EP-1100 Systems with Dedicated Pump		EP-1110-P221 EP-1115-P221	EP-1110-P223	EP-1120-P521	EP-1115-P523 EP-1120-P523	EP-1115-P543 EP-1120-P543	EP-HA1115 EP-HA1120	EP-MB1315 EP-MB1320 / EP-FM1315 EP-FM1320
Pump, Control-Timer Part Number		ACP-221	ACP-223	ACP-521	ACP-523	ACP-543		
Centrifugal Grinder Pump: Horsepower		2 hp	2 hp	5 hp	5 hp	5hp		
Input Voltage, Phase		208-220 VAC, 1 Ø	230 VAC, 3 Ø	208-220 VAC, 1 Ø	230 VAC, 3 Ø	460 VAC, 3 Ø		

Anue Water Technologies, Inc.
USA, CA: 1-760-476-9090 www.AnueWater.com AUS, QLD: +61(1)300-750-560

Appendix D

Pump Rating

PERFORMANCE CURVE

PRODUCT	TYPE
NP3171.181	MT

DATE	PROJECT	CURVE NO	ISSUE
2011-04-08		63-435-00-4530	1

	1/1-LOAD	3/4-LOAD	1/2-LOAD
POWER FACTOR	0.83	0.78	0.66
EFFICIENCY	89.5 %	90.5 %	90.0 %
MOTOR DATA	---	---	---

RATED POWER	30	hp
STARTING CURRENT ...	257	A
RATED CURRENT ...	38	A
RATED SPEED	1760	rpm
TOT.MOM.OF INERTIA ...	0.16	kgm2
NO. OF BLADES	2	

IMPELLER DIAMETER: 244 mm

MOTOR #	STATOR	REV
25-17-4AA	07YSER	11

FREQ.	PHASES	VOLTAGE	POLES
60 Hz	3	460 V	4

GEARTYPE	RATIO
---	---

COMMENTS

INLET/OUTLET	IMP. THROUGHLET
-/ 6 inch	---

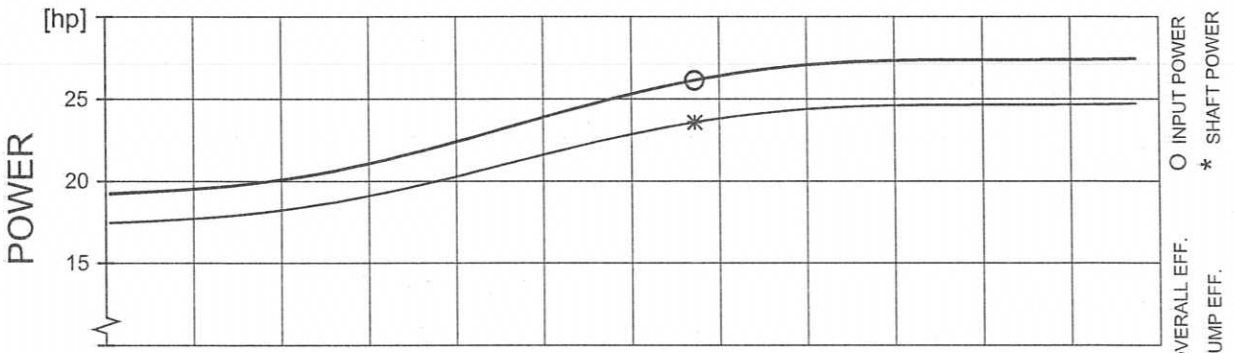

DUTY-POINT	FLOW[USgpm]	HEAD[ft]	POWER [hp]	EFF. [%]	NPSHre[ft]
B.E.P.	1344	55.6	26.2 (23.6)	72.4 (80.2)	22.7

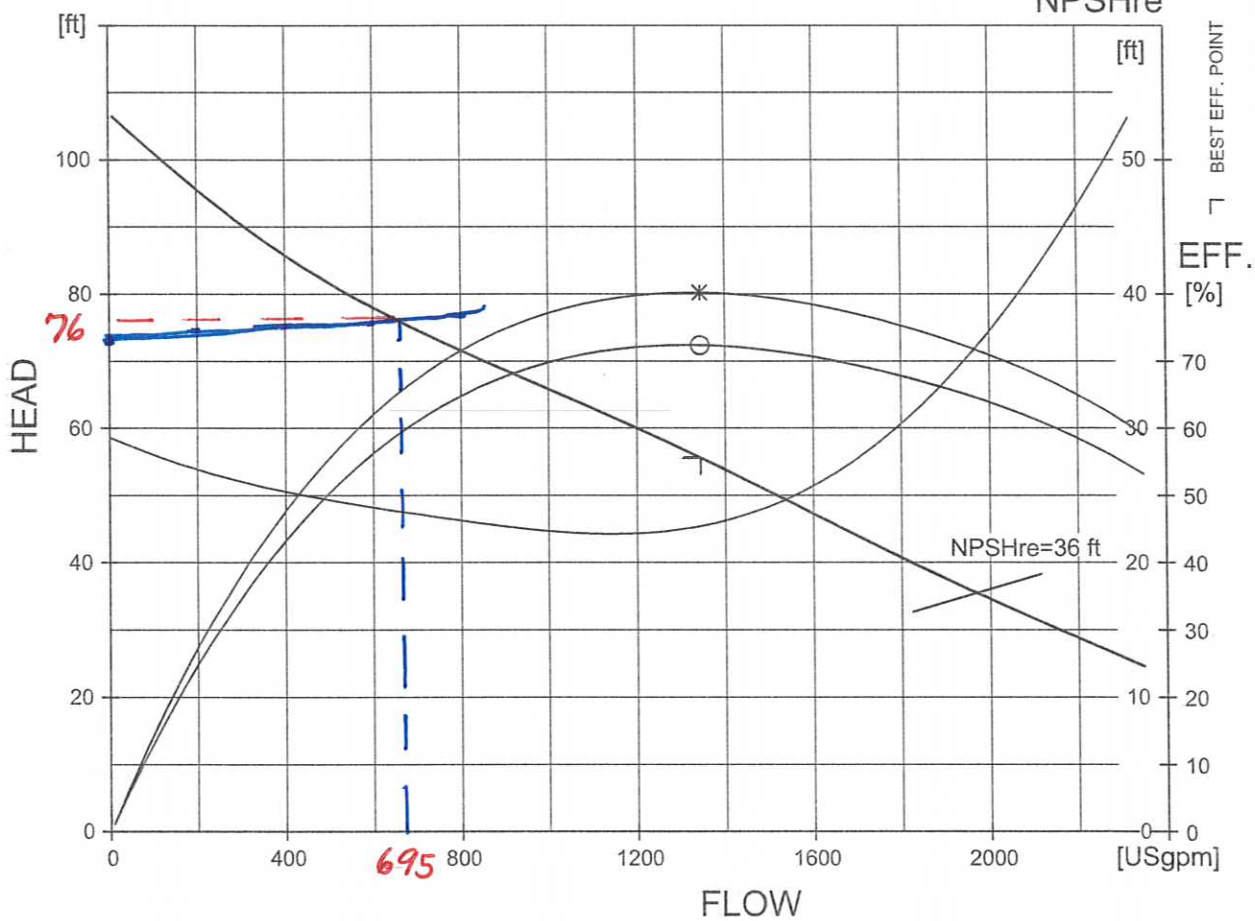

NPSHre = NPSH3% + min. operational margin

Performance with clear water and ambient temp 40 °C

HI B Curve

FLYPS3.1.5.7 (20060531)

Rating

Frequency	**60** Hz	Product	**3171 . 181**	Issue	**1**
Phases	**3**	Motor #	**25-17-4AA**	# of Starts/Hr	**30**
Poles	**4**	Rated power	**30.0** hp	Issue date	
Approval		Installations	**PSTZ**	Valid from	**6/8/2005**
-	**N**	Type of duty	**S1**	Status	**APPR**

Rtd. amb. temp. **40** ° C / **104** ° F

	Alternative 1	*Alternative 2*		
Voltage	**460** V	**230** V	Stator variant	**07**
Connection	**YSER**	**Y//**	Speed	**1760** r/min
Rtd. Curr.	**38.0** A	**75.0** A	Module	**149**
Starting current	**257.0** A	**515.0** A	Motor issue	**11**
Power factor	**0.83**	**0.83**		
NEMA code letter	**H**	**H**		

Warm liquid data Note! Reduced rated power

Rtd. amb. temp.	**70** ° C / **158** ° F	° C /	° F
Rtd. Curr. (1)	**32.0** A	A	
Rtd. Curr. (2)	**64.0** A	A	
Max input power	**20.0** kW	kW	

Flygt

ITT Industries

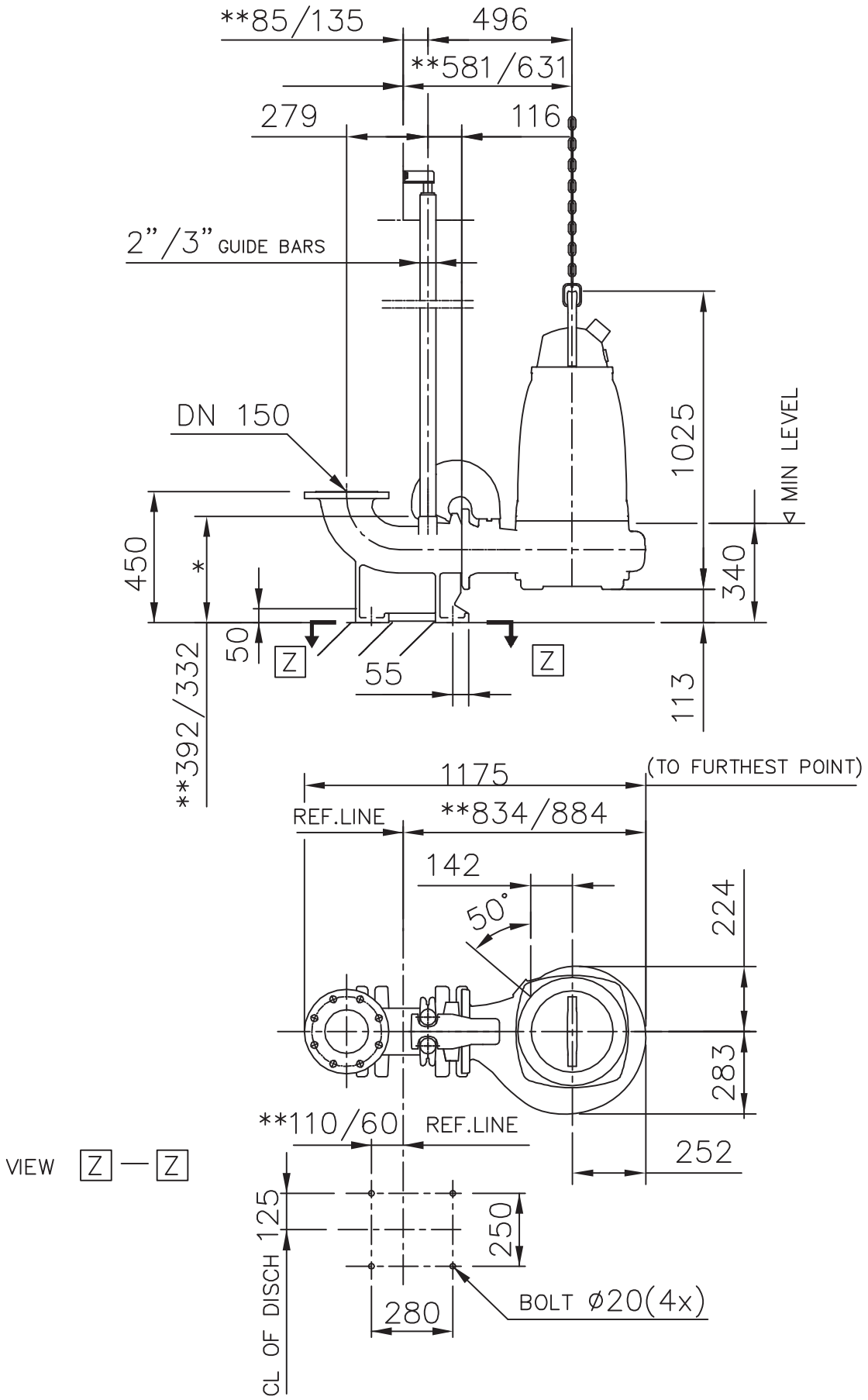

2" guidebars for a new installation
3" guidebars for retrofit

** DIMENSION TO ENDS OF GUIDE BARS
DIMENSIONS FOR 2"/3" GUIDE BARS

Weight (kg)	
Pump with cooling jacket	Disch
329	78
Pump without cooling jacket	
300	

FLYGT AUTOCAD DRAWING	Denomination: Dimensional drwg NP, FP 3171 MT DN 150	Drawn by NK	Checked by	Date 081013
		Scale 1:20		Reg no 5399
		6599500		13

Appendix E

Water Table Map

WATER TABLE MAP

Average Wet Season

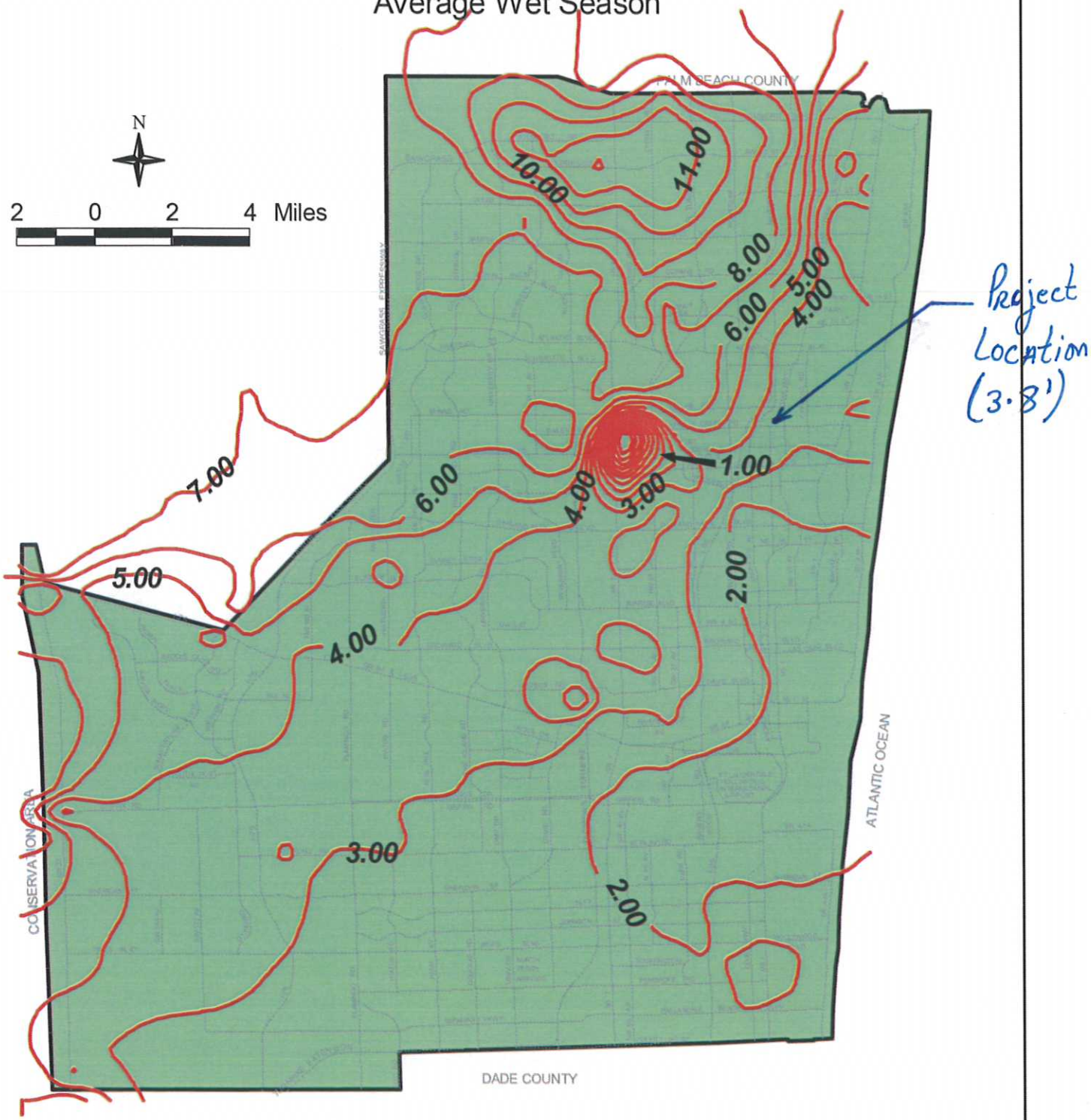

Broward County Office of Environmental Services Water Management Division

February 17, 2000

averagewet.apr

Appendix F

Site Plan

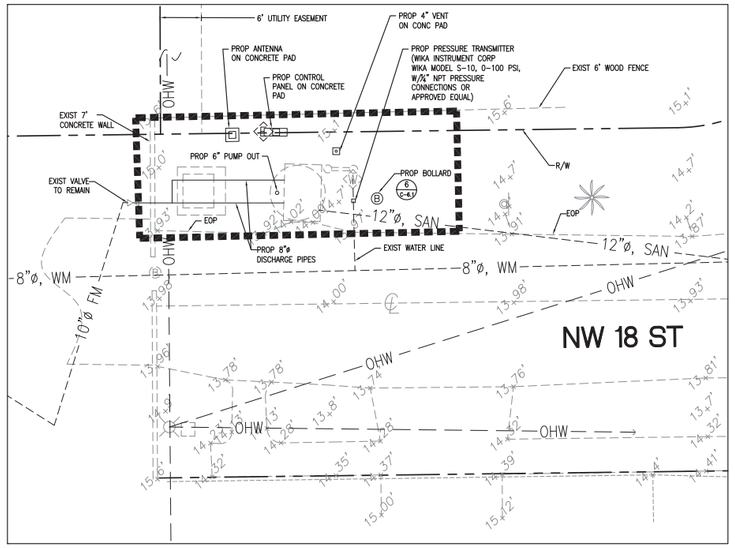

SITE PLAN
SCALE: 1"=10'

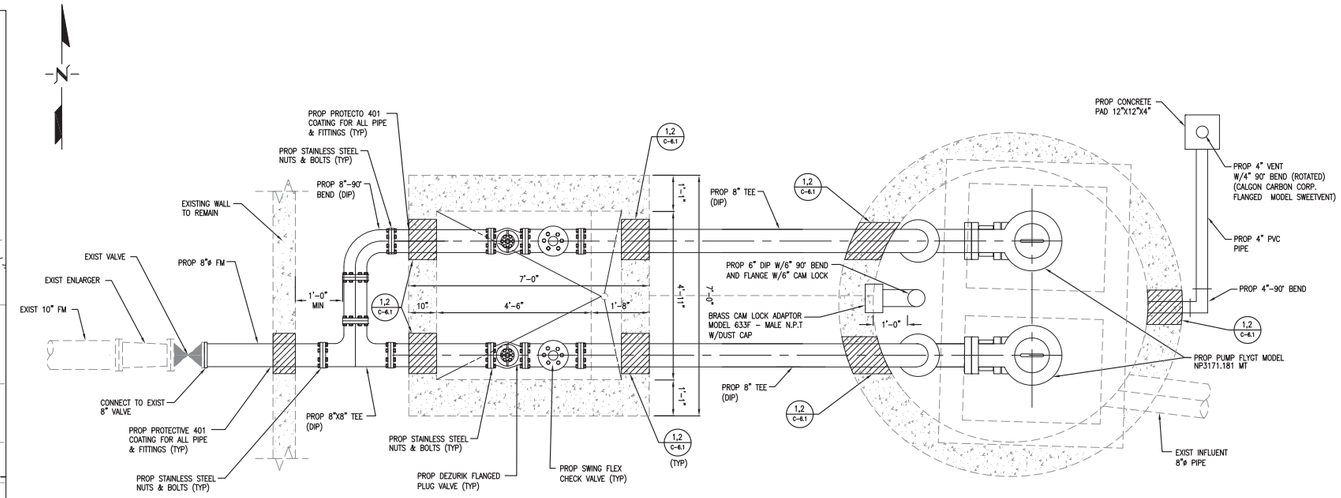

PLAN VIEW
SCALE: 1"=2'

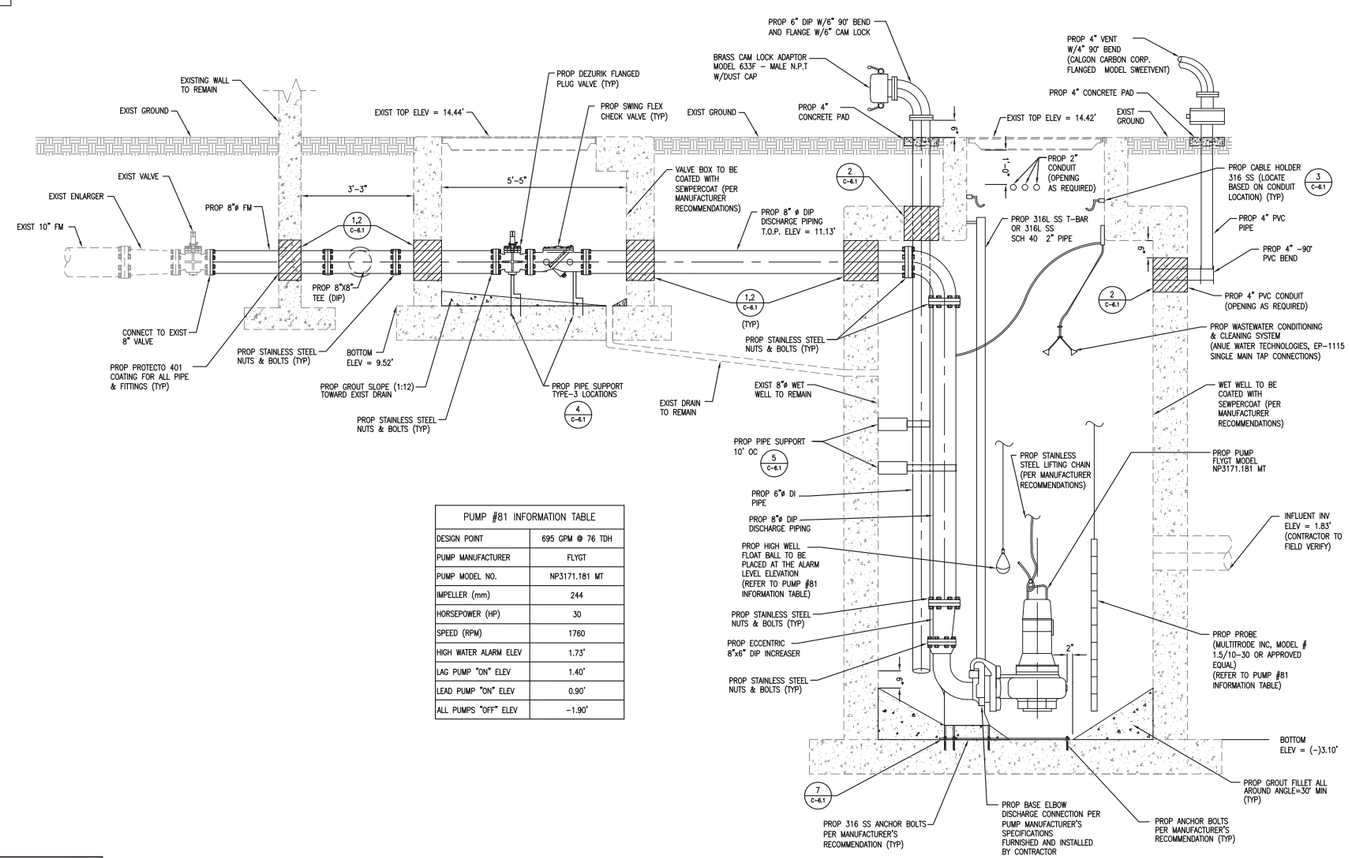

ELEVATION VIEW
SCALE: 1"=2'

PUMP #81 INFORMATION TABLE	
DESIGN POINT	695 GPM @ 76 TDH
PUMP MANUFACTURER	FLYGT
PUMP MODEL NO.	NP3171.181 MT
IMPELLER (mm)	244
HORSEPOWER (HP)	30
SPEED (RPM)	1760
HIGH WATER ALARM ELEV	1.73'
LAG PUMP "ON" ELEV	1.40'
LEAD PUMP "ON" ELEV	0.90'
ALL PUMPS "OFF" ELEV	-1.90'

KNOW WHAT'S BELOW ALWAYS CALL 811 BEFORE YOU DIG
It's fast. It's free. It's the law.
www.callsunshine.com

THESE PLANS ARE NOT FINAL CONSTRUCTION DOCUMENTS UNTIL APPROVALS BY PERMITTING AND JURISDICTIONAL AGENCIES HAVE BEEN OBTAINED. CONSTRUCTION WITHOUT SAID APPROVALS IS AT SOLE RISK TO CONTRACTOR. ENGINEER IS NOT RESPONSIBLE FOR CHANGES MADE DUE TO PERMITTING/JURISDICTIONAL DIRECTIONS, IF CONSTRUCTION PROCEEDS WITHOUT DUE AUTHORIZATION/APPROVALS.

CITY OF POMPANO BEACH BROWARD COUNTY, FL

1201 NE 5th AVE POMPANO BEACH, FL 33060

EAC Consulting, Inc.
CA # 7011
815 NW 57th AVE, SUITE 402
MIAMI, FL 33126
(305) 265-5400

PUMP STATION #81 REHABILITATION

90% SUBMITTAL

DRAWING ISSUED

SUBMITTAL	No.	DESCRIPTION	DATE	BY
REVIEW 60 %			08/26/10	GM
REVIEW 90 %			04/08/11	GM
REVIEW 100 %				
PERMIT	ø			

REVISION	No.	DESCRIPTION	DATE	BY

DESIGNED : JA | CHECKED : RD/GM
DRAWN : JA/DG | FINAL CHECK BY : GM

GREGORY A. MENDEZ, P.E.
STATE OF FLORIDA - LICENSE NO. 64718

DATE : APRIL, 2011 | SCALE : AS SHOWN

DWG TITLE: SITE PLAN

DWG No. C.5.0

(NOT PART OF BROWARD COUNTY NOTES NOR APPROVAL) DRAWING SCALE SHOWN CORRESPONDS TO PLOT SIZE OF 24"X36". IF THIS DRAWING IS PLOTTED ON OTHER SIZE SHEET ENGINEER OF RECORD DOES NOT WARRANT ACCURACY OF DRAWING SCALE.