THIS DOCUMENT IS THE PROPERTY OF CURRIE SOWARDS AGUILA ARCHITECTS INC. ALL RIGHTS ARE RESERVED. ANY POSSESSION, REPRODUCTION OR OTHER USE OF THIS DOCUMENT, WITHOUT THE WRITTEN CONSENT OF CURRIE SOWARDS AGUILA ARCHITECTS INC., IS PROHIBITED.

SPLIT A/C UNIT SCHEDULE

UNIT DESIGNATION	AHU/CU-1	AHU/CU-2	AHU/CU-3	AHU/CU-4	AHU/CU-5	.	.
MANUFACTURER	CARRIER	CARRIER	MR. SLIM	CARRIER	CARRIER	.	.
SYSTEM TYPE	SPLIT	SPLIT	MINI-SPLIT	SPLIT	SPLIT	.	.
SEER/EER	20.5/16.0	18.0/12.7	16.0/12.8	18.0/12.7	18.3/13.5	.	.
NOMINAL TONS	1.5	5.0	1.5	5.0	4.0	.	.
TOTAL COOLING	14,800	52,220	16.2 MBH	52,220	44,970	.	.
NET SENSIBLE	14,460	47,850	14.5 MBH	47,850	34,950	.	.
AREA SERVED	1ST FLR LOBBY	1ST FLR OFFICES	ELEVATOR ROOM	2ND FLR DINING	2ND FLR BEDS	.	.
FAN / COIL SECTION							
MODEL	FE4ANB006	FE4ANB006	MSY-A17NA	FE4ANB006	FE4ANB006	.	.
TOTAL CFM	600	2,000	380	2,000	1,600	.	.
OUTSIDE AIR CFM	100 (OA UNIT)	400 (OA UNIT)	–	350 (OA UNIT)	300 (OA UNIT)	.	.
ENT. AIR (°F)	75.2/61.5	76.0/62.3	94.0/54.3	75.3/62.3	76.3/62.7	.	.
EXT. SP. (IN WG)	0.5	1.0	–	1.0	1.0	.	.
FAN MOTOR H.P.	3/4	3/4	–	3/4	3/4	.	.
DRIVE	ELECTRONIC	ELECTRONIC	DIRECT	ELECTRONIC	ELECTRONIC	.	.
VOLTAGE/PHASE *	208/1ø	208/1ø	208/1ø	208/1ø	208/1ø	.	.
COIL SIZE (SQ.FT.)	7.42	7.42	–	7.42	7.42	.	.
ROWS-FINS/INCH	3/14.5	3/14.5	–	3/14.5	3/14.5	.	.
WEIGHT LBS	207	207	23	207	207	.	.
CONDENSATE DRAIN	3/4"	3/4"	3/4"	3/4"	3/4"	.	.
MCA **	8.5	8.5	1.2	8.5	8.5	.	.
MOCP ***	15	15	15	15	15	.	.
HEATING CAPACITIES							
MODEL	HEAT PUMP	HEAT PUMP	–	HEAT PUMP	HEAT PUMP	.	.
CAPACITY BTUH	14,500 BTUH	55,300 BTUH	–	55,300 BTUH	45,500 BTUH	.	.
(@ 47° OA/70° IA)	–	–	–	–	–	.	.
COP/HSPF	4.7/13.0	3.86/12.0	–	3.86/12.0	4.12/12.5	.	.
TOTAL CFM	600	2,000	–	2,000	1,800	.	.
FILTER SPECIFICATIONS							
MANUFACTURER	CARRIER	–	MR. SLIM	–	–		
MODEL	N/A	–	N/A	–	–		
MERV	N/A	–	N/A	–	–		
SIZE	21.5X16.5X1	–	–	–	–		
MOUNTING	FILTER RACK	–	R/A GRILLE	–	–		
TYPE	PLEATED	–	WASHABLE	–	–		
CONDENSING SECTION							
MODEL	25VNA024A30	25VNA060A30	MUY-A17NA	25VNA060A30	25VNA048A30	.	.
TYPE	AIR-COOLED	AIR-COOLED	AIR COOLED	AIR-COOLED	AIR-COOLED	.	.
REFRIGERANT	R-410A	R-410A	R-410A	R-410A	R-410A	.	.
SUCTION LINE	7/8	1-1/8	1/2	1-1/8	1-1/8	.	.
LIQUID LINE	3/8	3/8	1/4	3/8	3/8	.	.
COMPR. NO. TYPE	2 STAGE SCROLL	2 STAGE SCROLL	–	2 STAGE SCROLL	2 STAGE SCROLL	.	.
COMPRESSOR RLA.	16.5	27.0	–	27.0	27.0	.	.
VOLT/PHASE	208/1ø	208/1ø	208/1ø	208/1ø	208/1ø	.	.
FAN: #/AMPS/VOLTS/ø	1/2.9/208/1ø	1/2.9/208/1ø	–	1/2.9/208/1ø	1/2.9/208/1ø	.	.
MCA **	23.5	36.6	14.0	36.6	36.6	.	.
MOCP ***	30.0	50.0	15	50.0	50.0	.	.
WEIGHT LBS	324	334	88	334	334	.	.
NOTES:	1,2,3,4,5,6,7	1,2,3,4,5,6,7,9	1,2,8	1,2,3,4,5,6,7,9	1,2,3,4,5,6,7,9		

* FURNISH FACTORY DISCONNECT CIRCUIT BREAKER.
** MINIMUM CIRCUIT AMPACITY
*** MAXIMUM OVERCURRENT PROTECTION

1. PROVIDE AND INSTALL PROGRAMMABLE ELECTRONIC THERMOSTAT.
2. PROVIDE ENVIRONMENTAL PROTECTIVE "SEACOAST" COATING ON CONDENSER COILS APPLIED AT FACTORY.
3. AHU TO BE STAND MOUNTED WITH BOTTOM RETURN. SEE DETAILS.
4. PROVIDE INTEGRAL NON-FUSED DISCONNECT SWITCH.
5. PROVIDE ULTRAVIOLET LIGHT FOR DRAIN PAN BACTERIAL GROWTH INHIBITION.
6. CONDENSING UNIT PROVIDED WITH TWO-STAGE SCROLL COMPRESSOR, TO BE MATCHED WITH VARIABLE SPEED FAN AIR HANDLING UNIT FOR CAPACITY MODULATION.
7. PROVIDE MOTORIZED OUTSIDE AIR AND RETURN AIR DAMPERS IN CONJUNCTION WITH WALL MOUNTED CO2 SENSORS TO PROVIDE DEMAND CONTROL VENTILATION. SEE CONTROL DIAGRAM.
8. POWER FOR AHU AND CONDENSING UNIT ARE SEPARATE. NEW DUCTLESS SPLIT SYSTEM TO BE INSTALLED IN ELEVATOR EQUIPMENT ROOM. AIR HANDLING UNIT TO BE WALL MOUNTED, AND TO INCLUDE CONDENSATE PUMP. RUN REFRIGERANT LINES TO ROOF MOUNTED CONDENSING UNIT.
9. INSTALL PHOTOELECTRIC SMOKE DETECTOR (ELECTRONIC BASED DUCT DETECTOR). SEE ELECTRICAL SPECIFICATIONS.

OUTSIDE AIR SPLIT A/C UNIT SCHEDULE

UNIT DESIGNATION	OA AHU/CU-6	
MANUFACTURER	YORK	
SYSTEM TYPE	SPLIT	
EER/IPLV	11.2/11.6	
NOMINAL TONS	10.0	
TOTAL COOLING (BTU)	108,100	
NET SENSIBLE (BTU)	49,400	
AREA SERVED	ENTIRE BUILDING	
FAN / COIL SECTION		
MODEL	ND120C00C6AAA2	
TOTAL CFM	1,150	
OUTSIDE AIR CFM	1,150	
ENT. AIR DB/WB °F	91/79	
EXT. SP. (IN WG)	0.9	
FAN MOTOR H.P.	2	
DRIVE	BELT	
VOLTAGE/PHASE *	208/3*	
COIL SIZE (SQ.FT.)	10.6	
ROWS-FINS/INCH	4-15	
WEIGHT LBS	562	
CONDENSATE DRAIN	3/4"	
MCA **	SEE HEATER	
MOCP ***	SEE HEATER	
HEATING CAPACITIES		
MODEL	10 KW	
CAPACITY BTUH	25,590	
TYPE	ELECTRIC	
KW/VOLTAGE/ø	7.5/208/3	
STAGES/KW EACH	1/7.5	
CONTROL VOLT	24	
MCA **	34.3	
MOCP ***	35	
CONDENSING SECTION		
MODEL	YD120C00A2AAA2	
TYPE	AIR COOLED	
REFRIGERANT	R410A	
# REFRIGERATION CIRCUITS	2	
SUCTION LINE	1-1/8"	
LIQUID LINE	5/8"	
COMPR. (NO.) TYPE	(1) SCROLL	
COMPRESSOR LRA (EACH)	123	
VOLT/PHASE	208/3	
FAN: #/FLA(EACH)/VOLTS/ø	2/3.0/208/1	
MCA **	45	
MOCP ***	60	
DIMENSIONS (LxWxH) (IN.)	59x32x50	
WEIGHT (LBS.)	493	
NOTES:	1 2 3 4 5 6 7 8	

* FURNISH FACTORY DISCONNECT CIRCUIT BREAKER.
** MINIMUM CIRCUIT AMPACITY
*** MAXIMUM OVERCURRENT PROTECTION

1. PROVIDE FACTORY INSTALLED "ULTRA-DRY" OPTION WITH MODULATING HOT GAS REHEAT.
2. PROVIDE FACTORY INSTALLED "RAWAL" CAPACITY CONTROL DEVICE WITH ACCUMULATOR AND RECEIVER.
3. PROVIDE FACTORY INSTALLED "ULTRA-SMART" UNIT CONTROLLER, SET-UP FOR SPACE TEMPERATURE AND HUMIDITY AIR CONTROL.
4. PROVIDE FACTORY INSTALLED "ULTRA-SMART" FULL COLOR TOUCH SCREEN USER INTERFACE.
5. PROVIDE FACTORY INSTALLED "VFD" FOR PRECISE CONTROL OF AIR FLOW.
6. PROVIDE "ULTRA GUARD" COASTAL CORROSION PROTECTION FOR CONDENSER COILS.
7. PROVIDE AND INSTALL ROOF MOUNTED CONDENSING UNIT STAND AS PER DETAILS.
8. PROVIDE AND INSTALL CONTROL PANEL IN MECHANICAL ROOM. PROVIDE CONNECTION TO ZONE DAMPERS(MOTORIZED O.A. DAMPERS) AND DUCT STATIC PRESSURE SENSOR.

MECHANICAL LEGEND

SYMBOL	DESCRIPTION
O.A.	OUTSIDE AIR
O.A.L.	OUTSIDE AIR LOUVER
R.A.	RETURN AIR
S.A.	SUPPLY AIR
T.A.	TRANSFER AIR
E.A.	EXHAUST AIR
C.F.M.	CUBIC FEET PER MINUTE
T	THERMOSTAT
H	HUMIDISTAT
SD	SMOKE DETECTOR
R	REMOTE TEST STATION
FD	UL LISTED FIRE DAMPER
VD	VOLUME DAMPER
BD	BACKDRAFT DAMPER
MVD	MANUAL VOLUME DAMPER
MOD	MOTOR OPERATED DAMPER
	TWIST-IN COLLAR WITH DAMPER
	CEILING DIFFUSER – SUPPLY AIR
	SIDE-WALL DIFFUSER – SUPPLY AIR
	TURNING VANES – SUPPLY AIR
	DISTRIBUTION TRIANGLE – SUPPLY AIR
	SHEET METAL DUCTWORK – SUPPLY AIR
	FLEXIBLE DUCT – SUPPLY AIR – 8"ø THRU 14"ø
	FLEXIBLE DUCT – SUPPLY AIR – 3"ø THRU 6"ø
	CEILING DIFFUSER – RETURN AIR
	SIDE-WALL DIFFUSER – RETURN AIR
	TURNING VANES – RETURN AIR
	DISTRIBUTION TRIANGLE – RETURN AIR
	SHEET METAL DUCTWORK – RETURN AIR
	FLEXIBLE DUCT – RETURN AIR – 8"ø THRU 14"ø
	FLEXIBLE DUCT – RETURN AIR – 3"ø THRU 6"ø
	SHEET METAL DUCTWORK – EXHAUST AIR
	EXISTING DUCTWORK – TO REMAIN
	EXISTING DUCTWORK – TO BE REMOVED
RL	REFRIGERANT LIQUID LINE
RS	REFRIGERANT SUCTION LINE

MECHANICAL NOTES

1. DO NOT SCALE THE DRAWINGS. REFER TO ARCHITECTURAL PLANS FOR ALL DIMENSIONS.
2. COORDINATE EXACT LOCATION OF ALL DIFFUSERS AND RETURNS WITH ARCHITECTURAL REFLECTED CEILING PLAN.
3. ALL WORK SHALL COMPLY WITH THE LATEST EDITION OF THE FLORIDA BUILDING AND MECHANICAL CODE, NFPA-90A, AND LOCAL CODE AMENDMENTS.
4. ALL DAMPER CONTROLS SHALL BE ACCESSIBLE.
5. ALL OUTSIDE AIR DUCTS OR INTAKES SHALL HAVE DAMPERS.
6. ALL VENTILATION DUCTS SHALL BE SHEET METAL, INSTALLED, SEALED AND SUPPORTED IN ACCORDANCE WITH THE LATEST EDITION "SMACNA" LOW VELOCITY DUCT CONSTRUCTION STANDARDS AND DETAILS ON THESE PLANS.
   ALL OUTSIDE AIR DUCTS OR INTAKES SHALL HAVE DAMPERS.
   OUTSIDE AIR DUCT SHALL BE WRAPPED WITH R-4 VALUE INSULATION FOR ALL PORTIONS OF DUCT RUNNING INSIDE THE BUILDING.
7. ALL EXHAUST DUCT SHALL BE SHEET METAL, INSTALLED, SEALED AND SUPPORTED IN ACCORDANCE WITH THE LATEST EDITION OF "SMACNA" LOW VELOCITY DUCT CONSTRUCTION STANDARDS AND DETAILS ON THESE PLANS.
8. AIR CONDITIONING SUPPLY AND RETURN DUCTS SHALL BE GALVANIZED SHEET METAL WITH EXTERIOR WRAP INSULATION (R-6.0), INSTALLED IN ACCORDANCE WITH SMACNA LOW VELOCITY DUCT CONSTRUCTION STANDARDS AND DETAILS ON THESE PLANS. 0-1" STATIC PRESSURE CLASS (+/-) UNLESS OTHERWISE NOTED.
9. CONDENSATE DRAIN PIPING SHALL BE INSULATED WITH 3/4 INCH THICK ARMSTRONG "ARMAFLEX" OR EQUAL. EXTERIOR INSULATION SHALL BE COATED WITH ULTRAVIOLET RESISTANT MATERIAL IN ACCORDANCE WITH THE MANUFACTURER'S RECOMMENDATIONS.
10. REFRIGERANT PIPING SHALL BE COPPER, REFRIGERATION GRADE, SOFT TEMPER, SEALED AT THE MILL. INSULATE SUCTION PIPE INDOORS: WITH 3/8" IMCOA POLYOLEFIN INSULATION; OUTDOORS: 3/4" IMCOA POLYOLEFIN INSULATION. CIRCULATE DRY NITROGEN THROUGH PIPING WHEN SOLDERING. TEST FOR LEAKS PRIOR TO CHARGING SYSTEM WITH R-410A REFRIGERANT.
11. CONDENSATE DRAINS SHALL BE SCHEDULE 40 PVC PIPING OR COPPER IF LOCATED IN A RETURN AIR PLENUM.
12. PROVIDE CERTIFIED TEST & BALANCE REPORT AT COMPLETION OF PROJECT PRIOR TO FINAL INSPECTION.
13. PROVIDE SHOP DRAWINGS FOR ALL EQUIPMENT. MECHANICAL CONTRACTOR SHALL NOT ORDER ANY EQUIPMENT WITHOUT A APPROVED SHOP DRAWING FROM THE MECHANICAL ENGINEER. SIX (6) COPIES OF EACH.
14. PROVIDE "AS BUILT" DUCTWORK DRAWINGS AT COMPLETION OF PROJECT PRIOR TO FINAL INSPECTION. SIX (6) COPIES OF EACH.
15. FBC2010-403.3 THE VENTILATION SYSTEM IS DESIGNED TO SUPPLY THE REQUIRED RATE OF VENTILATION AIR CONTINUOUSLY DURING THE PERIOD THE BUILDING IS OCCUPIED, EXCEPT AS OTHERWISE STATE IN OTHER PROVISIONS OF THE CODE.
16. FBC2010-607.1 DUCT PENETRATIONS AND AIR TRANSFER OPENINGS SHALL REQUIRE FIRE DAMPERS IN FIRE-RESISTANCE-RATED ASSEMBLIES.
17. FBC2010 13-409.1.ABC.3.3 OUTSIDE AIR DUCTS SHALL HAVE DAMPERS CAPABLE OF AUTOMATICALLY SHUTTING OFF DURING PREOCCUPANCY, BUILDING WARMUP,COOL DOWN, AND SETBACK.
    EXCEPTION 2 APPLIES TO UNITS WITH LESS THAN 300 CFM OF OUTDOOR AIR, WHERE NON-MOTORIZED DAMERS (GRAVITY DAMPERS) ARE ACCEPTABLE.
18. GC IS SINGULARLY RESPONSIBLE FOR INSURING COORDINATION BETWEEN TRUSSES AND MECHANICAL SYSTEMS TO INSURE REQUIRED CLEARANCES.
19. KITCHEN EXHAUST DUCT WORK FROM KITCHEN HOOD TO ROOF PENETRATION SHALL BE INSULATED WITH A MINIMUM OF ONE AND ONE-HALF (1-1/2) INCH (1-LAYERS) 3M FIREMASTER INSULATION TO PROVIDE A MINIMUM OF 2HR RATING PER UL 1978 AND NFPA 96.

FAN SCHEDULE

ITEM #	EF-1	EF-2	EF-3,4	EF-5-9,12	EF-10	EF-11 (6)	EF-13,14	EF-15	EF-16,17	SF-1
MANUFACTURER	GREENHECK	GREENHECK	GREENHECK	GREENHECK	CAPTIVEAIRE	AIRVAC	GREENHECK	GREENHECK	GREENHECK	CAPTIVEAIRE
MODEL	CSP-A250	SP-A200	SP-B110	SP-B110	NCA14FA	AIR VAC-911	CSP-A250	CSP-A410	BSQ-180-7	INLINE1L-G10
MOUNTING	CEILING	CEILING	CEILING	CEILING	ROOF	CEILING	CEILING	CEILING	IN-LINE	CEILING
AREA SERVED	STORAGE	DECON	RESTROOMS	RESTROOMS	HOOD	APPARTUS	STORAGE	WORK ROOM	APP. BAY	HOOD
	.	.	.	.	.	.	.	.	.	.
	.	.	.	.	.	.	.	.	.	.
CONDITION OF SERVICE										
CFM	200	200	100	100	2,340	3,000	200	315	3,500	2,106
STATIC PRESSURE (W.G.)	0.35	0.25	0.35	0.35	1.25	0.5	0.35	0.35	0.50	0.80
RPM (MAX.)	1000	900	950	950	1394	.	1000	1000	1725	1096
TIP SPEED (MAX.)										
DRIVE										
DIRECT	X	X	X	X	X	X	X	X	.	X
V-BELT	.	.	.	.	.	.	.	.	X	.
FAN MOTORS										
HP (AMPS)	83 WATTS	48 WATTS	80 WATTS	80 WATTS	1 (7.0 FLA)	3/4(10.4 FLA)	83 WATTS	121 WATTS	3/4	1.5
VOLTS	120	120	120	120	208	120	120	120	208	208
PHASE	1ø	1ø	1ø	1ø	1ø	1ø	1ø	1ø	3ø	1ø
CYCLE	60	60	60	60	60	60	60	60	60	60
MOTOR SPEEDS										
TYPE OF MOTOR	.	.	.	.	.	.	.	.	.	.
SPECIAL FEATURES										
BIRD SCREEN (MATERIAL)	.	.	.	.	.	.	.	.	.	.
OPTIONS GAGE	.	.	.	.	.	.	.	.	.	.
GAGE	.	.	.	.	.	.	.	.	.	.
MAT.(AL)(FIBR.GL.)(OTHER)	AL.	AL.	AL.	AL.	AL.	STEEL	AL.	AL.	GALV. STL.	AL.
SPECIAL COATING	.	.	.	.	.	.	.	.	.	.
BUILT IN DISCONNECT	YES	YES	YES	YES	YES	YES	YES	YES	YES	YES
NOTE:	2 4 6 7	1 2 5 6	1 2 6	1 2 6	9	3	1 2 6 7	2 5 6 8	6 11	10

1. EXHAUST FANS TO BE CONTROLLED BY UNIT MOUNTED MOTION SENSOR.
2. PROVIDE & INSTALL WALL/ROOF CAP.
3. CEILING MOUNTED AIR SCRUBBER FANS WITH FILTRATION SYSTEMS FOR VEHICLE EXHAUST POLLUTANT REMOVAL. UNITS ACTIVATED BY ELECTRIC EYE AND CO SENSORS, WITH ADDITIONAL REMOTE TIMER BOX MOUNTED ACTIVATION PUSH BUTTON. TYPICAL OF SIX (6). AIRVAC AIR VACUUM CORP., WWW.AIRVAC911.COM P.O. BOX 517, DOVER, NH 03821 (800) 540-7264. CONTACT: TONY VITKO, AIRVAC911@AOL.COM.
4. EXHAUST FAN TO BE RUN CONTINUOUSLY. PROVIDE WALL SWITCH.
5. PROVIDE 10"x10" DOOR LOUVER FOR MAKEUP AIR INTAKE.
6. PROVIDE BACKDRAFT DAMPER, DISCONNECT SWITCH, AND VIBRATION ISOLATORS FOR CEILING HANGING.
7. PROVIDE 8"x8" WALL OPENING FOR MAKEUP AIR INTAKE.
8. EXHAUST FANS TO BE CONTROLLED BY WALL MOUNTED MOTION SENSOR.
9. ROOF MOUNTED FAN TO BE INTERLOCKED WITH KITCHEN HOOD OPERATION. SEE KITCHEN HOOD DRAWINGS, SHEET M-2.1.
10. CEILING MOUNTED FAN TO BE INTERLOCKED WITH KITCHEN HOOD OPERATION. SEE KITCHEN HOOD DRAWINGS, SHEET M-2.1.
11. PROVIDE AND INSTALL WALL MOUNTED THERMOSTAT FOR APPARATUS BAY VENTILATION FAN.

CO2 MONITORING SYSTEM

- CO2 DETECTION AND CONTROL UNIT
MANUFACTURER: ACME ENGINEERING PRODUCTS
MODEL #: CO2-2000 (WALL-MOUNTED)
- MOTORIZED DAMPER
MANUFACTURER: RUSKIN
MODEL #: CD50
- ELECTRIC PROPORTIONAL ACTUATOR
MANUFACTURER: BELIMO
MODEL #: LF24-SR

WIRING DIAGRAM

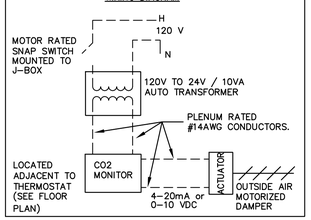

DUCT MATERIAL LEGEND

SYMBOL	MATERIAL	LINER	SMACNA PRESSURE CLASS	SMACNA SEAL CLASS
	METAL-SUPPLY/RETURN	NONE	1"WG	D
	METAL-EXHAUST/INTAKE		1"WG	C
	FLEXIBLE			

HVAC DESIGN CRITERIA

	AHU-1	AHU-2	AHU-3	AHU-4	AHU-5
OUTDOOR DESIGN:	91'db/78'wb	91'db/78'wb	91'db/78'wb	91'db/78'wb	91'db/78'wb
INDOOR DESIGN:	74'db 50% R.H	74'db 50% R.H	78'db 50% R.H	74'db 50% R.H	72'db 50% R.H
OUTSIDE AIR MINIMUM:	90 CFM	285 CFM	–	300 CFM	300 CFM
MAXIMUM SENSIBLE LOAD:	11,900 BTUH	41,600 BTUH	13,400 BTUH	47,800 BTUH	40,600 BTUH
MAXIMUM LATENT LOAD:	4,200 BTUH	21,100 BTUH	0 BTUH	14,500 BTUH	8,500 BTUH
TOTAL COOLING REQUIRED:	16,100 BTUH	62,600 BTUH	13,400 BTUH	62,000 BTUH	49,100 BTUH
CONDITIONED AREA:	537 SQ.FT.	2,232 SQ.FT.	66 SQ.FT.	1,108 SQ.FT.	2,539 SQ.FT.
TOTAL HEATING REQUIRED WITH O/A:	4,700 BTUH	11,200 BTUH	0 BTUH	8,700 BTUH	11,100 BTUH
SIZING METHOD:	CARRIER HAP	CARRIER HAP	CARRIER HAP	CARRIER HAP	CARRIER HAP

BUILDING ENVELOPE

DESCRIPTION:	'U' VALUE/SHGC
ROOF (SLOPED):	0.046 (R-19 BRD)
ROOF (FLAT):	0.051 (R-15.7 BRD)
WALL:	0.114 (R-5.1 BRD)
FLOOR:	0.10
GLASS:	1.070/0.28

MECHANICAL DRAWING LIST

DRAWING NUMBER	DRAWING NAME
M-0.1	MECHANICAL NOTES, SYMBOLS AND SCHEDULES
M-0.2	MECHANICAL NOTES, SYMBOLS AND SCHEDULES
M-1.1	MECHANICAL FIRST FLOOR PLAN
M-1.2	MECHANICAL SECOND FLOOR PLAN
M-1.3	MECHANICAL ROOF PLAN
M-2.1	KITCHEN HOOD DETAILS AND SCHEDULES
M-2.2	MECHANICAL DETAILS
M-2.3	MECHANICAL DETAILS
M-2.4	MECHANICAL DETAILS

MECHANICAL NOTES, SYMBOLS AND SCHEDULES

N.T.S.

TYEC HVAC PLUMBING ELECTRICAL
THOMPSON & YOUNGROSS ENGINEERING CONSULTANTS, LLC
TO THE BEST OF MY KNOWLEDGE, THE PLANS AND SPECIFICATIONS COMPLY WITH THE MINIMUM APPLICABLE BUILDING CODE.
DANIEL E. THOMPSON
FLA. REG. NO. 33289
ANDREW J. YOUNGROSS
FLA. REG. NO. 51758
CERTIFICATE of AUTHORIZATION NO. 25996
112 S.E. 10th STREET
DELRAY BEACH, FL. 33483
E-MAIL: tec@tecfla.com
TEL: 561-274-0200
FAX: 561-274-0222
www.tecfla.com

CURRIE SOWARDS AGUILA ARCHITECTS
Architects, Planners & Interior Designers
AA26001584
134 N.E. 1st Avenue
Delray Beach, Florida 33444
TEL: 561 276-4951
FAX: 561 243-8184
E-mail: office@csa-architects.com

ISSUED FOR : DRC 11.29.2011
AAC 01.18.2012
AAC (RESUBMITTAL) 03.21.2012
P&Z 05.01.2012
BIDS 08.06.2012

PERMIT 08.06.2012

CONSTRUCTION

SEAL

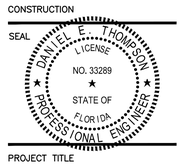

PROJECT TITLE

CITY OF POMPANO BEACH FIRE STATION 103

3721 N.E. 12th Avenue
POMPANO BEACH, FL 33064

REVISIONS

THESE DRAWINGS ARE PREPARED PER ESTABLISHED INDUSTRY STANDARDS AND REPRESENT THE ARCHITECT AND ENGINEERS DESIGN CONCEPT. THEY ARE NOT INTENDED TO PROVIDE EVERY DETAIL OR CONDITION REQUIRED TO CONSTRUCT THE BUILDING. THE CONTRACTOR THROUGH SUBMITTALS AND OTHER COORDINATION EFFORTS IS FULLY RESPONSIBLE FOR PROVIDING A COMPLETE AND OPERATIONAL BUILDING WHETHER INDICATED ON THE PLANS OR NOT.

FILE NUMBER
11127-M-0.1.DWG

DRAWING TITLE
MECHANICAL NOTES, SYMBOLS AND SCHEDULES

DATE 08.06.2012 | DRAWN BY MB

JOB NUMBER 110102 / 11127

DRAWING NUMBER
M-0.1

08.06.2012 BID-PERMIT SET

THIS DOCUMENT IS THE PROPERTY OF CURRIE SOWARDS AGUILA ARCHITECTS INC. ALL RIGHTS ARE RESERVED. ANY POSSESSION, REPRODUCTION OR OTHER USE OF THIS DOCUMENT, WITHOUT THE WRITTEN CONSENT OF CURRIE SOWARDS AGUILA ARCHITECTS INC., IS PROHIBITED.

AC-1

SUMMARY

VENTILATION SIZING METHOD.....ASHRAE Std 62.1–2007 OCCUPANT DIVERSITY.....1.0 SYSTEM VENTILATION EFFICIENCY..... 0.78
DESIGN CONDITION..... COOLING OPERATION UNCORRECTED VENTILATION AIRFLOW RATE..... 63 CFM DESIGN VENTILATION AIRFLOW RATE.....79 CFM

SPACE VENTILATION ANALYSIS TABLE

ROOM NAME	FLOOR AREA (SQ.FT.)	REQUIRED OA (CFM/SQ.FT.)	TIME AVG OCCUPANCY	REQUIRED OA (CFM/PERSON)	AIR DISTRIBUTION EFFECTIVENESS	REQUIRED OA (CFM)	UNCORRECTED OA (CFM)	SPACE VENT. EFFICIENCY
100 – 1ST FLOOR LOBBY	280	0.06	5.0	5	0.8	52	42	0.963
103 – 1ST FLOOR TREATMENT	109	0.06	2.0	5	0.8	21	17	0.875
101–116 – 1ST FLOOR TOILET	134	0.00	0.0	0.0	0.8	0	0	1.104
102 – 1ST FLOOR AC	37	0.12	0.0	0.0	0.8	6	4	0.776
–	–	–	–	–	–	–	–	–

D = OCCUPANT DIVERSITY Ps = SYSTEM POPULATION
D = Ps / (SUM all zones Pz) = 5 PEOPLE / 5 PEOPLE = 1.0
OUTDOOR AIR REQUIRED = 79 CFM --- OUTDOOR AIR PROVIDED = 90 CFM

AC-2

SUMMARY

VENTILATION SIZING METHOD.....ASHRAE Std 62.1–2007 OCCUPANT DIVERSITY.....0.1.0 SYSTEM VENTILATION EFFICIENCY..... 0.906
DESIGN CONDITION..... COOLING OPERATION UNCORRECTED VENTILATION AIRFLOW RATE..... 353 CFM DESIGN VENTILATION AIRFLOW RATE.....390 CFM

SPACE VENTILATION ANALYSIS TABLE

ROOM NAME	FLOOR AREA (SQ.FT.)	REQUIRED OA (CFM/SQ.FT.)	TIME AVG OCCUPANCY	REQUIRED OA (CFM/PERSON)	AIR DISTRIBUTION EFFECTIVENESS	REQUIRED OA (CFM)	UNCORRECTED OA (CFM)	SPACE VENT. EFFICIENCY
104 – 1ST FLOOR CORRIDOR	233	0.06	0.0	0.0	0.8	17.0	14	1.007
108 – 1ST FLOOR CORRIDOR	160	0.06	0.0	0.0	0.8	12.0	10	1.00
109 – 1ST FLOOR FITNESS	433	0.06	4.0	20.0	0.8	132	106	0.906
106 – 1ST FLOOR OFFICERS OFFICE	345	0.06	3.0	5.0	0.8	45.0	36	1.012
112 – 1ST FLOOR STORAGE	70	0.12	0.0	0.0	0.8	11.0	8	1.080
107 – 1ST FLOOR TRAINING	475	0.06	10.0	7.5	0.8	129	104	0.908
124 – 1ST FLOOR TURNOUT STORAGE	349	0.12	3.0	0.0	0.8	52.0	42	0.928
105 – 1ST FLOOR WATCH	158	0.06	2.0	5.0	0.8	24.0	19	0.997
111 – 1ST FLOOR AC	40	0.12	0.0	0.0	0.8	6.0	5	1.103
110–114 – 1ST FLOOR ELECTRICAL–FIRE	82	0.12	0.0	0.0	0.8	12.0	10	0.994

D = OCCUPANT DIVERSITY Ps = SYSTEM POPULATION
D = Ps / (SUM all zones Pz) = 15 PEOPLE / 15 PEOPLE = 1.0
OUTDOOR AIR REQUIRED = 390 CFM --- OUTDOOR AIR PROVIDED = 390 CFM

AC–2 MOTORIZED OUTDOOR AIR DAMPER SHALL BE CONTROLLED BY A CARBON DIOXIDE SENSOR MOUNTED INSIDE OFFICER'S OFFICE 106.
OUTDOOR AIR DAMPER SHALL MODULATE BETWEEN MINIMUM AND MAXIMUM AIRFLOWS.
MINIMUM AIRFLOW = (1,880 SQ.FT. x 0.06 CFM/SQ.FT.) + (526 SQ.FT. x 0.12/SQ.FT.) + (0 PEOPLE x 5 CFM/PERSON) = 175 CFM (UNOCCUPIED MODE)
MAXIMUM AIRFLOW = 325 CFM

AC-3

SUMMARY

VENTILATION SIZING METHOD.....ASHRAE Std 62.1–2007 OCCUPANT DIVERSITY.....1.0 SYSTEM VENTILATION EFFICIENCY..... 1.0
DESIGN CONDITION..... COOLING OPERATION UNCORRECTED VENTILATION AIRFLOW RATE..... 0 CFM DESIGN VENTILATION AIRFLOW RATE.....0 CFM

SPACE VENTILATION ANALYSIS TABLE

ROOM NAME	FLOOR AREA (SQ.FT.)	REQUIRED OA (CFM/SQ.FT.)	TIME AVG OCCUPANCY	REQUIRED OA (CFM/PERSON)	AIR DISTRIBUTION EFFECTIVENESS	REQUIRED OA (CFM)	UNCORRECTED OA (CFM)	SPACE VENT. EFFICIENCY
125 – 1ST FLOOR ELEVATOR EQUIPMENT ROOM	144	0.00	0.0	0.0	1.0	0	0	1.000
–	–	–	–	–	–	–	–	–
–	–	–	–	–	–	–	–	–

OUTDOOR AIR REQUIRED = 0 CFM --- OUTDOOR AIR PROVIDED = 0 CFM

AC-4

SUMMARY

VENTILATION SIZING METHOD.....ASHRAE Std 62.1–2007 OCCUPANT DIVERSITY.....1.0 SYSTEM VENTILATION EFFICIENCY..... 0.853
DESIGN CONDITION..... COOLING OPERATION UNCORRECTED VENTILATION AIRFLOW RATE..... 294 CFM DESIGN VENTILATION AIRFLOW RATE.....345 CFM

SPACE VENTILATION ANALYSIS TABLE

ROOM NAME	FLOOR AREA (SQ.FT.)	REQUIRED OA (CFM/SQ.FT.)	TIME AVG OCCUPANCY	REQUIRED OA (CFM/PERSON)	AIR DISTRIBUTION EFFECTIVENESS	REQUIRED OA (CFM)	UNCORRECTED OA (CFM)	SPACE VENT. EFFICIENCY
202 – 2ND FLOOR DAYROOM	353	0.06	10.0	5.0	0.8	89	71	0.972
203 – 2ND FLOOR DINING	400	0.18	10.0	7.5	0.8	184	147	0.853
204 – 2ND FLOOR KITCHEN	290	0.18	2.0	7.5	0.8	84	67	1.039
205 – 2ND FLOOR PANTRY	44	0.12	0.0	0.0	0.8	7	5	1.045
201 – 2ND FLOOR AC	30	0.12	0.0	0.0	0.8	5	4	0.916

D = OCCUPANT DIVERSITY Ps = SYSTEM POPULATION
D = Ps / (SUM all zones Pz) = 22 PEOPLE / 22 PEOPLE = 1.0
OUTDOOR AIR REQUIRED = 345 CFM --- OUTDOOR AIR PROVIDED = 345 CFM

AC–4 MOTORIZED OUTDOOR AIR DAMPER SHALL BE CONTROLLED BY A CARBON DIOXIDE SENSOR MOUNTED INSIDE DAYROOM 202.
OUTDOOR AIR DAMPER SHALL MODULATE BETWEEN MINIMUM AND MAXIMUM AIRFLOWS.
MINIMUM AIRFLOW = (690 SQ.FT. x 0.18 CFM/SQ.FT.) + (496 SQ.FT. x 0.06/SQ.FT.) + (45 SQ.FT. x 0.12/SQ.FT.) + (0 PEOPLE x 7.5 CFM/PERSON) = 159 CFM (UNOCCUPIED MODE)
MAXIMUM AIRFLOW = 345 CFM

AIR DISTRIBUTION SCHEDULE

TYPE	DESCRIPTION	MFG	MODEL	CFM	MAX N.C.	NECK	SIZE	COLOR	MTD.	REMARKS
A	SUPPLY	TITUS	TDCA–AA	AS SHOWN	25	AS SHOWN	24X24	WHITE	LAY–IN	–
A1	SUPPLY	TITUS	TDCA–AA	AS SHOWN	25	AS SHOWN	24X24	WHITE	SURFACE	–
A2	SUPPLY	TITUS	TDCA–AA	AS SHOWN	25	AS SHOWN	12X12	WHITE	SURFACE	–
B	SUPPLY	TITUS	301–FL	AS SHOWN	25	–	AS SHOWN	WHITE		–
C	RETURN	TITUS	350–FL	AS SHOWN	25	–	AS SHOWN	WHITE	SURFACE	–
D	EXHAUST	TITUS	350–FL	AS SHOWN	25	–	AS SHOWN	WHITE	SURFACE	–
E	EXHAUST	TITUS	355–RL–HD	AS SHOWN	30	–	AS SHOWN	WHITE	SURFACE	HEAVY DUTY STEEL GRILLE

ALL DIFFUSER, REGISTERS, GRILLES , LINEAR DIFFUSERS TO BE ALUMINUM CONSTRUCTION
LINEAR DIFFUSERS TO HAVE BLADE SPACING AND DEFLECTION AS SHOWN IN SCHEDULE, AND MODEL AG–35 OPPOSED BLADE DAMPER.

AC-5

SUMMARY

VENTILATION SIZING METHOD.....ASHRAE Std 62.1–2007 OCCUPANT DIVERSITY.....1.0 SYSTEM VENTILATION EFFICIENCY..... 0.774
DESIGN CONDITION..... COOLING OPERATION UNCORRECTED VENTILATION AIRFLOW RATE..... 201 CFM DESIGN VENTILATION AIRFLOW RATE.....325 CFM

SPACE VENTILATION ANALYSIS TABLE

ROOM NAME	FLOOR AREA (SQ.FT.)	REQUIRED OA (CFM/SQ.FT.)	TIME AVG OCCUPANCY	REQUIRED OA (CFM/PERSON)	AIR DISTRIBUTION EFFECTIVENESS	REQUIRED OA (CFM)	UNCORRECTED OA (CFM)	SPACE VENT. EFFICIENCY
2ND FLOOR BUNK 1	119	0.06	1.0	5.0	0.8	15	12	0.774
2ND FLOOR BUNK 2	119	0.06	1.0	5.0	0.8	15	12	0.790
2ND FLOOR BUNK 3, 4, 5	354	0.06	3.0	5.0	0.8	45	36	0.789
2ND FLOOR BUNK 6	118	0.06	1.0	5.0	0.8	15	12	0.80
2ND FLOOR BUNK 7	129	0.06	1.0	5.0	0.8	16	13	0.876
209 – 2ND FLOOR CORRIDOR	160	0.06	0.0	0.0	0.8	12	10	1.035
200 – 2ND FLOOR CORRIDOR	468	0.06	0.0	0.0	0.8	35	28	0.908
218 – 2ND FLOOR ELECTRICAL ROOM	173	0.12	0.0	0.0	0.8	5	4	1.010
216 – 2ND FLOOR JANITOR	20	0.00	0.0	0.0	0.8	0	0	1.129
214 – 2ND FLOOR OFFICERS BUNK	115	0.06	1.0	5.0	0.8	15	12	0.826
212 – 2ND FLOOR OFFICERS BUNK	114	0.06	1.0	5.0	0.8	15	12	0.961
210 – 2ND FLOOR OFFICERS BUNK	112	0.06	1.0	5.0	0.8	15	12	0.906
215 – 2ND FLOOR OFFICER TOILET	70	0.00	0.0	0.0	0.8	0	0	1.129
211 – 2ND FLOOR OFFICER TOILET	97	0.00	0.0	0.0	0.8	0	0	1.129
220 – 2ND FLOOR TOILETS	267	0.00	0.0	0.0	0.8	0	0	1.129
219 – 2ND FLOOR COMMUNICATION ROOM	101	0.12	0.0	0.0	0.8	15	12	1.075
228 – 2ND FLOOR STORAGE	35	0.12	0.0	0.0	0.8	5	4	1.010
208 – 2ND FLOOR STORAGE	20	0.12	0.0	0.0	0.8	3	2	1.055
213 – 2ND FLOOR AC	26	0.12	0.0	0.0	0.8	4	3	0.862

OUTDOOR AIR REQUIRED = 260 CFM --- OUTDOOR AIR PROVIDED = 325 CFM

AC–5 MOTORIZED OUTDOOR AIR DAMPER SHALL BE CONTROLLED BY A CARBON DIOXIDE SENSOR MOUNTED INSIDE CORRIDOR 209.
OUTDOOR AIR DAMPER SHALL MODULATE BETWEEN MINIMUM AND MAXIMUM AIRFLOWS.
MINIMUM AIRFLOW = (2,465 SQ.FT. x 0.06 CFM/SQ.FT.) + (85 SQ.FT. x 0.12/SQ.FT.) + (0 PEOPLE x 5 CFM/PERSON) = 158 CFM (UNOCCUPIED MODE)
MAXIMUM AIRFLOW = 325 CFM

OUTSIDE AIR CALCULATION

SINGLE ZONE SYSTEM CALCULATIONS PER ASHRAE 62.1 2007. VENTILATION FOR ACCEPTABLE INDOOR AIR QUALITY

TERMS:

Vot = OUTDOOR AIR INTAKE FLOW (O.A.F.)
Vbz = BREATHING ZONE (O.A.F.)
Vbz = (RpPz) + (RaAz)
WHERE:
Rp = O.A.F. PER PERSON (TABLE 6–1)
Pz = ZONE POPULATION
Ra = O.A.F. PER UNIT AREA (TABLE 6–1)
Az = ZONE FLOOR AREA (Square Feet)
Ez = ZONE AIR DISTRIBUTION EFFECTIVENESS (TABLE 6–2)
Voz = ZONE OUTDOOR AIR FLOW
Voz = Vbz / Ez; THEREFORE
Vot = Voz, FOR A SINGLE ZONE SYSTEM

MULTI–ZONE RECIRCULATING SYSTEM CALCULATIONS PER ASHRAE 62.1 2007. VENTILATION FOR ACCEPTABLE INDOOR AIR QUALITY

TERMS:

Zp = Voz / Vpz
WHERE:
Zp = ZONE PRIMARY OUTDOOR AIR FRACTION
Vpz = ZONE PRIMARY AIRFLOW
Ev = SYSTEM VENTILATION EFFICIENCY (TABLE 6–3)
Vou = D * (SUM all zones RpPz + SUM all zones RaAz)
WHERE:
Vou = UNCORRECTED OUTDOOR AIR INTAKE
D = OCCUPANT DIVERSITY
D = Ps / (SUM all zones Pz)
WHERE:
Ps = SYSTEM POPULATION
Vot = Vou / Ev

AIR BALANCE SCHEDULE

MARK	OUTSIDE AIR	EXHAUST AIR	RESULTING PRESSURE	AREA	TOTAL
AC–1	90 CFM	–100	–10 CFM	1ST FLOOR	+380 CFM
AC–2	390 CFM	–	+390 CFM	1ST FLOOR	
AC–4	345 CFM	–234 CFM	+81 CFM	2ND FLOOR	+106 CFM
AC–5	325 CFM	–300 CFM	+25 CFM	2ND FLOOR	

EXHAUST AIR CALCULATION

VENTILATION SIZING METHOD.....ASHRAE Std 62.1–2007, TABLE 6–4

EF-11 (TYPICAL OF SIX), EF-16, 17

(APPARATUS BAY)

FLOOR AREA = 4,674 S.F.
SPACE VOLUME = 4,674 SQ.FT. x 24 FT. = 112,176 CU.FT.

OUTDOOR AIR REQUIREMENTS: 1.5 CFM PER SQ.FT.
CALCULATED OUTDOOR AIR = 1.5 CFM/SQ.FT. x 4,674 SQ.FT.= 7,000 CFM

EF–11: CFM PROVIDED = 3,000 CFM x 6 EF'S = 18,000 CFM

NOTE: EF–11 ARE AIR SCRUBBERS WHICH USE PRE–FILTERS AND GAS–PHASE FILTERS TO REMOVE HIGH WEIGHT AND LIGHT WEIGHT MOLECULAR GASES WITHIN DIESEL EXHAUST TO COMPLY WITH ASHRAE 52.2.

EF–16, 17: CFM PROVIDED = 3,500 CFM x 2 EF'S = 7,000 CFM

NOTE: EF–16, 17 ARE USED FOR VENTILATION AIR AS REQUIRED BY ASHRAE 62.1–2007. AIR TO BE DIRECTED FROM CEILING OF APPARATUS BAY TO EXHAUST THROUGH WALL LOUVERS. MAKEUP AIR IS TO BE PROVIDED BY WALL LOUVERS.

EF-1, 2, 13, 14

WET STORAGE 119, DECON 117, HOSE STORAGE 121, GENERAL STORAGE 120

FLOOR AREA = 60 S.F. – 130 S.F.

OUTDOOR AIR REQUIREMENTS: 1.5 CFM PER SQ.FT.
CALCULATED OUTDOOR AIR = 1.5 CFM/SQ.FT. x 130 SQ.FT.= 195 CFM

CFM PROVIDED = 200 CFM

EF-15

WORK ROOM 122

FLOOR AREA = 95 S.F.

OUTDOOR AIR REQUIREMENTS: 1.5 CFM PER SQ.FT.
CALCULATED OUTDOOR AIR = 1.5 CFM/SQ.FT. x 95 SQ.FT.= 145 CFM

CFM PROVIDED = 315 CFM

MECHANICAL NOTES, SYMBOLS AND SCHEDULES

N.T.S.

CURRIE SOWARDS AGUILA ARCHITECTS

Architects, Planners & Interior Designers

AA26001584
134 N.E. 1st Avenue
Delray Beach, Florida 33444
TEL: 561 276–4951
FAX: 561 243–8184
E–mail: office@csa–architects.com

ISSUED FOR : DRC 11.29.2011
AAC.....01.18.2012
AAC. (RESUBMITTAL) 03.21.2012
P&Z.....05.01.2012
BIDS 08.06.2012

PERMIT 08.06.2012

CONSTRUCTION

SEAL

DANIEL E. THOMPSON LICENSE NO. 33289 STATE OF FLORIDA PROFESSIONAL ENGINEER

PROJECT TITLE

CITY OF POMPANO BEACH FIRE STATION 103

3721 N.E. 12th Avenue
POMPANO BEACH, FL 33064

REVISIONS

THESE DRAWINGS ARE PREPARED PER ESTABLISHED INDUSTRY STANDARDS AND REPRESENT THE ARCHITECT AND ENGINEER'S DESIGN CONCEPT. THEY ARE NOT INTENDED TO PROVIDE EVERY DETAIL OR CONDITION REQUIRED TO CONSTRUCT THE BUILDING. THE CONTRACTOR THROUGH SUBMITTALS AND OTHER COORDINATION EFFORTS IS FULLY RESPONSIBLE FOR PROVIDING A COMPLETE AND OPERATIONAL BUILDING WHETHER INDICATED ON THE PLANS OR NOT.

FILE NUMBER 11127–M–0.2.DWG

DRAWING TITLE
MECHANICAL NOTES, SYMBOLS AND SCHEDULES

DATE 08.06.2012 | DRAWN BY MB

JOB NUMBER 110102 / 11127

DRAWING NUMBER
M-0.2

08.06.2012 BID-PERMIT SET

TYEG HVAC PLUMBING ELECTRICAL
THOMPSON & YOUNGROSS ENGINEERING CONSULTANTS, LLC
TO THE BEST OF MY KNOWLEDGE, THE PLANS AND SPECIFICATIONS COMPLY WITH THE MINIMUM APPLICABLE BUILDING CODE.
DANIEL E. THOMPSON FLA. REG. NO. 33289
ANDREW J. YOUNGROSS FLA. REG. NO. 51758
CERTIFICATE of AUTHORIZATION NO. 25996
112 S.E. 10th STREET DELRAY BEACH, FL. 33483 E–MAIL: tec@tecfla.com
TEL: 561–274–0200 FAX: 561–274–0220 www.tecfla.com

PLAN KEY NOTES

1. CARBON DIOXIDE (CO2) SENSOR MOUNTED 5 FEET A.F.F. MANUFACTURER: ACME ENGINEERING PRODUCTS MODEL #: CO2-2000 SENSOR SHALL BE INTERLOCKED WITH MOTORIZED DAMPER FOR DEMAND VENTILATION. MOUNT ADJACENT TO WALL THERMOSTAT AND REMOTE TEST FOR SMOKE DETECTOR.
2. MOTORIZED DAMPER (RUSKIN CD-50) W/ ELECTRIC PROPORTIONAL DAMPER ACTUATOR (BELIMO-LF24-SR CONTROLLED BY CO2 SENSORS (SEE PLANS FOR LOCATIONS). PROVIDE ACCESS DOOR.
3. TIMER CONTROL AND MAINTENANCE MONITOR ELECTRICAL BOX FOR ACTIVATION OF SIX (6) EXHAUST FANS EF-1 WITH EXTERIOR MOUNTED REMOTE ACTIVATION PUSH BUTTON.
4. 8"x8" METAL DUCT TO PITCHED ROOF CAP.
5. 4"ø METAL DRYER DUCT TO PITCHED ROOF CAP.
6. 36"x12" WEATHER-PROOF LOUVER WITH INSECT SCREEN. UNITED ENERTECH MODEL #SE-D-5.1 OR ARCHITECT APPROVED EQUIVALENT. LOUVERS TO BE FACTORY FINISHED. SEE ARCHITECTURAL DRAWINGS.
7. 18"x12" WEATHER-PROOF LOUVER WITH INSECT SCREEN. UNITED ENERTECH MODEL #SE-D-5.1 OR ARCHITECT APPROVED EQUIVALENT. LOUVERS TO BE FACTORY FINISHED. SEE ARCHITECTURAL DRAWINGS.
8. 12"x12" WEATHER-PROOF LOUVER WITH INSECT SCREEN. UNITED ENERTECH MODEL #SE-D-5.1 OR ARCHITECT APPROVED EQUIVALENT. LOUVERS TO BE FACTORY FINISHED. SEE ARCHITECTURAL DRAWINGS.
9. RUSKIN MODEL DIBD2 STYLE B CIRCULAR CURTAIN TYPE FIRE DAMPER WITH 167°F FUSIBLE LINK. SEE DETAILS.
10. RUSKIN MODEL DIBD2 STYLE B RECTANGULAR CURTAIN TYPE FIRE DAMPER WITH 167°F FUSIBLE LINK. PROVIDE DUCT MOUNTED ACCESS DOOR. SEE DETAILS.
11. PROVIDE FIRE DAMPER IN DUCT PENETRATION OF FIRE RATED FLOOR. RUSKIN MODEL DIBD2 STYLE B RECTANGULAR CURTAIN TYPE FIRE DAMPER WITH 167°F FUSIBLE LINK. PROVIDE DUCT MOUNTED ACCESS DOOR. SEE DETAILS.
12. FLEXIBLE CONNECTION FROM GENERATOR EXHAUST OUTLET TO 48"x48H" WALL LOUVER W/ BIRDSCREEN, UNITED ENERTECH MODEL #DCSE-D-5.1 OR APPROVED EQUIVALENT. LOUVERS TO BE FACTORY FINISHED. SEE ARCHITECTURAL DRAWINGS.
13. CONNECT 6"ø SCHEDULE 40 EXHAUST PIPE FROM SLIP FIT EXHAUST CONNECTION ON GENERATOR TO WALL CAP. KNAUF BRAND HIGH TEMPERATURE FORMED RIGID HYDROUS CALCIUM SILICATE 3" PIPING INSULATION, WITH 25 MM GALVANIZED HEXAGON MESH AND 12 MM COAT OF INSULATING CEMENT. FINISH WITH A FINAL 12 MM COAT OF FINISHING CEMENT AND RECOVER WITH CANVAS. SEE SPECIFICATIONS. WRAP EXHAUST DUCT FROM EXIT OF MUFFLER TO TERMINATION OF WALL CAP.
14. MAKEUP AIR VENTILATION PROVIDED BY TWO (2) 48"x96" LOUVERED DOORS.
15. 60"x24" WEATHER-PROOF LOUVER WITH INSECT SCREEN. UNITED ENERTECH MODEL #SE-D-5.1 OR ARCHITECT APPROVED EQUIVALENT. LOUVERS TO BE FACTORY FINISHED. SEE ARCHITECTURAL DRAWINGS.
16. CARBON DIOXIDE (CO2) SENSOR MOUNTED IN RETURN AIR DUCT. MANUFACTURER: ACME ENGINEERING PRODUCTS MODEL #: CO2-2000 SENSOR SHALL BE INTERLOCKED WITH MOTORIZED DAMPER FOR DEMAND VENTILATION.

GAS GENERATOR LOUVER CALCULATION CRITERIA

– GAS GENERATOR
CRITERIA: 1,750 FT/MIN. AIR VELOCITY (0.5" W.G. MAX.)
RADIATOR COOLING: 8,872 CFM COMBUSTION AIR
ALTERNATOR COOLING: 1,345 CFM COMBUSTION AIR
GENERATOR: 595 CFM COMBUSTION AIR
TOTAL = 10,812 CFM

FREE AREA REQUIRED = 6.18 SQ.FT.

FREE AREA PROVIDED:
– NEW 48"x48" LOUVER = 16.0 SQ.FT.
x 48.4% FREE AREA = 7.74 SQ.FT.

OUTSIDE AIR DUCTWORK SHALL BE WRAPPED WITH R-4 VALUE INSULATION FOR ALL PORTIONS RUNNING INSIDE THE BUILDING. TYPICAL.

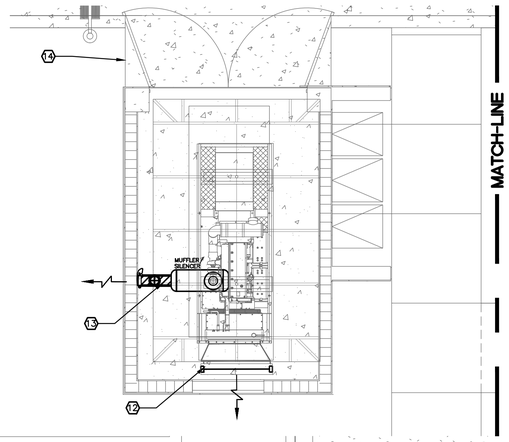

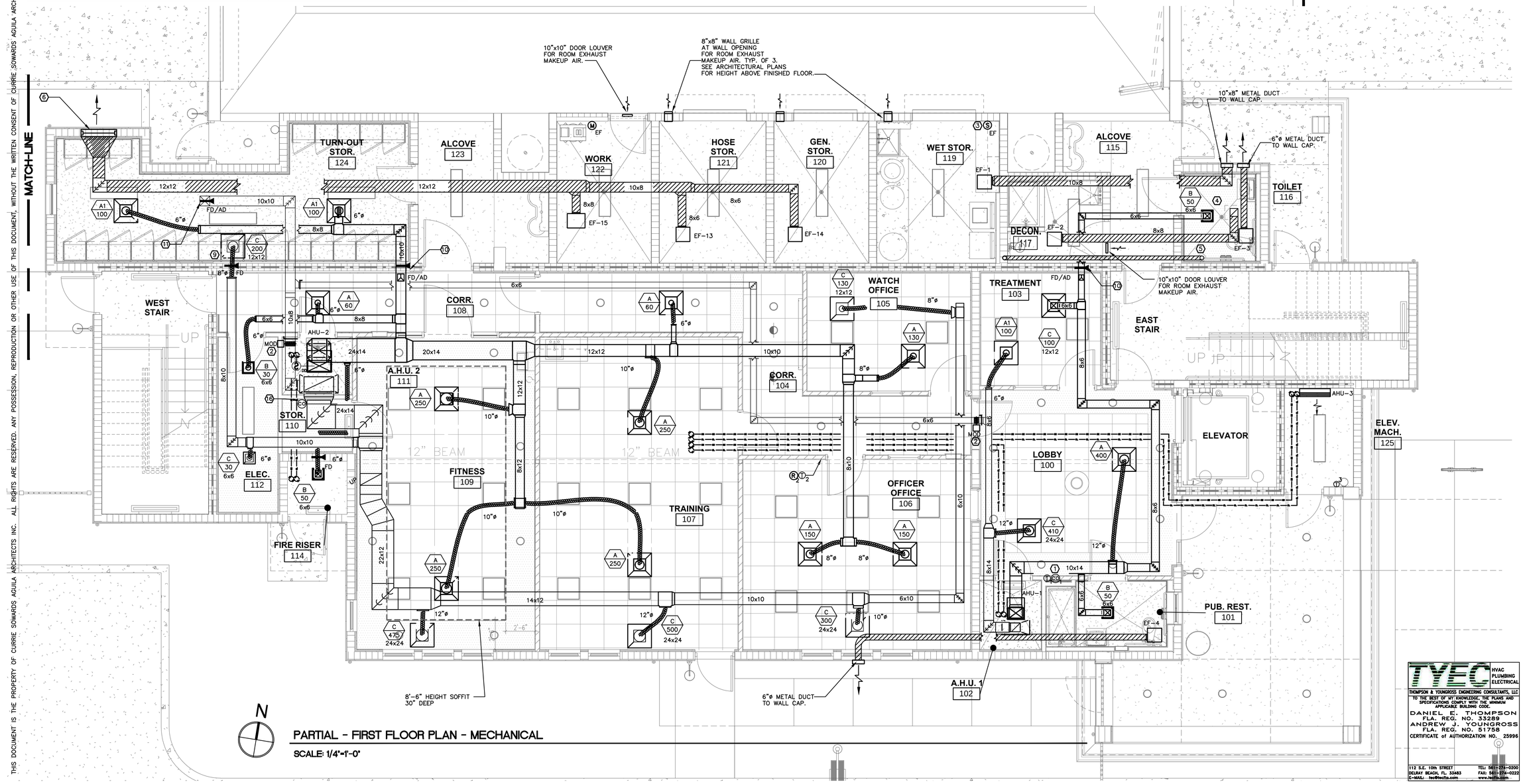

PARTIAL - FIRST FLOOR PLAN - MECHANICAL

SCALE: 1/4"=1'-0"

CURRIE SOWARDS AGUILA ARCHITECTS

Architects, Planners & Interior Designers

AA26001584
134 N.E. 1st Avenue
Delray Beach, Florida 33444
TEL: 561 276-4951
FAX: 561 243-8184
E-mail: office@csa-architects.com

ISSUED FOR :
DRC 11.29.2011
AAC 01.18.2012
AAC (RESUBMITTAL) 03.21.2012
P&Z 05.01.2012
BIDS 08.06.2012

PERMIT 08.06.2012

CONSTRUCTION

SEAL

DANIEL E. THOMPSON LICENSE NO. 33289 STATE OF FLORIDA PROFESSIONAL ENGINEER

PROJECT TITLE

CITY OF POMPANO BEACH FIRE STATION 103

3721 N.E. 12th Avenue
POMPANO BEACH, FL 33064

REVISIONS

THESE DRAWINGS ARE PREPARED PER ESTABLISHED INDUSTRY STANDARDS AND REPRESENT THE ARCHITECT AND ENGINEERS DESIGN CONCEPT. THEY ARE NOT INTENDED TO PROVIDE EVERY DETAIL OR CONDITION REQUIRED TO CONSTRUCT THE BUILDING. THE CONTRACTOR THROUGH SUBMITTALS AND OTHER COORDINATION EFFORTS IS FULLY RESPONSIBLE FOR PROVIDING A COMPLETE AND OPERATIONAL BUILDING WHETHER INDICATED ON THE PLANS OR NOT.

FILE NUMBER
11127-M-1.1.DWG

DRAWING TITLE
PARTIAL FIRST FLOOR PLAN - MECHANICAL

DATE 08.06.2012 | DRAWN BY MB

JOB NUMBER
110102 / 11127

DRAWING NUMBER
M-1.1

08.06.2012 BID-PERMIT SET

TYEC HVAC PLUMBING ELECTRICAL
THOMPSON & YOUNGROSS ENGINEERING CONSULTANTS, LLC
TO THE BEST OF MY KNOWLEDGE, THE PLANS AND SPECIFICATIONS COMPLY WITH THE MINIMUM APPLICABLE BUILDING CODE.
DANIEL E. THOMPSON
FLA. REG. NO. 33289
ANDREW J. YOUNGROSS
FLA. REG. NO. 51758
CERTIFICATE of AUTHORIZATION NO. 25996
112 S.E. 10th STREET
DELRAY BEACH, FL 33483
E-MAIL: tec@tyecfla.com
TEL: 561-274-0200
FAX: 561-274-0222
www.tyecfla.com

THIS DOCUMENT IS THE PROPERTY OF CURRIE SOWARDS AGUILA ARCHITECTS INC. ALL RIGHTS ARE RESERVED. ANY POSSESSION, REPRODUCTION OR OTHER USE OF THIS DOCUMENT, WITHOUT THE WRITTEN CONSENT OF CURRIE SOWARDS AGUILA ARCHITECTS INC., IS PROHIBITED.

THIS DOCUMENT IS THE PROPERTY OF CURRIE SOWARDS AGUILA ARCHITECTS INC. ALL RIGHTS ARE RESERVED. ANY POSSESSION, REPRODUCTION OR OTHER USE OF THIS DOCUMENT, WITHOUT THE WRITTEN CONSENT OF CURRIE SOWARDS AGUILA ARCHITECTS INC., IS PROHIBITED.

NOTE:
CONTRACTOR IS RESPONSIBLE FOR PROVIDING AND INSTALLING ALL REQUIRED ACCESS PANELS FOR SHUT OFF VALVES, JUNCTION BOXES, VOLUME DAMPERS, ETC., WHETHER OR NOT THEY ARE SHOWN ON THE DRAWINGS.

KITCHEN EXHAUST DUCT VELOCITY CALCULATION

DUCT VELOCITY FOR EXHAUST AND MAKE-UP AIR SYSTEMS ARE DESIGNED TO BE WITHIN THE 1500 TO 2500 FPM ALLOWED RANGE.

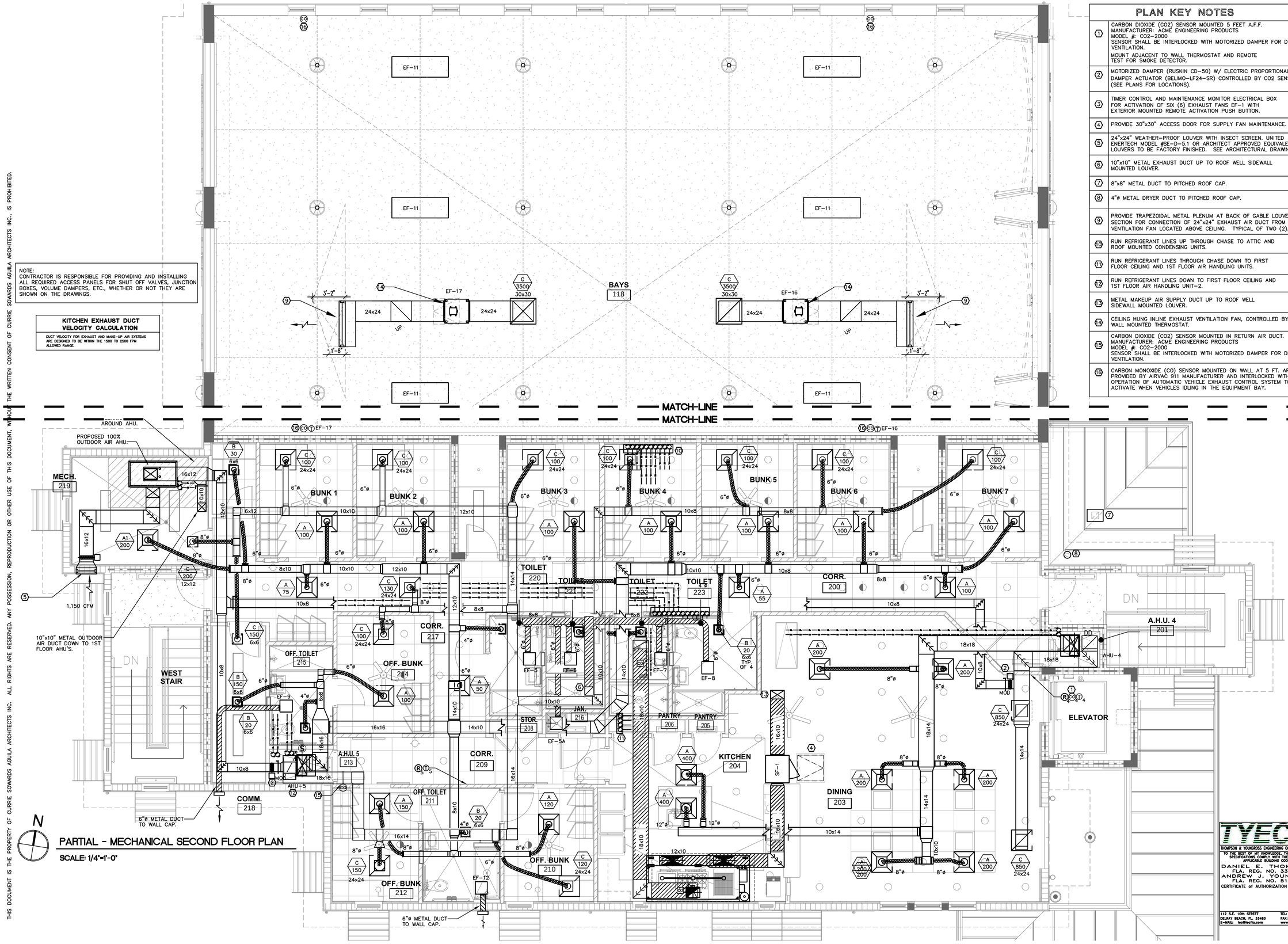

PLAN KEY NOTES

1	CARBON DIOXIDE (CO2) SENSOR MOUNTED 5 FEET A.F.F. MANUFACTURER: ACME ENGINEERING PRODUCTS MODEL #: CO2-2000 SENSOR SHALL BE INTERLOCKED WITH MOTORIZED DAMPER FOR DEMAND VENTILATION. MOUNT ADJACENT TO WALL THERMOSTAT AND REMOTE TEST FOR SMOKE DETECTOR.
2	MOTORIZED DAMPER (RUSKIN CD-50) W/ ELECTRIC PROPORTIONAL DAMPER ACTUATOR (BELIMO-LF24-SR) CONTROLLED BY CO2 SENSORS (SEE PLANS FOR LOCATIONS).
3	TIMER CONTROL AND MAINTENANCE MONITOR ELECTRICAL BOX FOR ACTIVATION OF SIX (6) EXHAUST FANS EF-1 WITH EXTERIOR MOUNTED REMOTE ACTIVATION PUSH BUTTON.
4	PROVIDE 30"x30" ACCESS DOOR FOR SUPPLY FAN MAINTENANCE.
5	24"x24" WEATHER-PROOF LOUVER WITH INSECT SCREEN. UNITED ENERTECH MODEL #SE-D-5.1 OR ARCHITECT APPROVED EQUIVALENT. LOUVERS TO BE FACTORY FINISHED. SEE ARCHITECTURAL DRAWINGS.
6	10"x10" METAL EXHAUST DUCT UP TO ROOF WELL SIDEWALL MOUNTED LOUVER.
7	8"x8" METAL DUCT TO PITCHED ROOF CAP.
8	4"ø METAL DRYER DUCT TO PITCHED ROOF CAP.
9	PROVIDE TRAPEZOIDAL METAL PLENUM AT BACK OF GABLE LOUVER SECTION FOR CONNECTION OF 24"x24" EXHAUST AIR DUCT FROM INLINE VENTILATION FAN LOCATED ABOVE CEILING. TYPICAL OF TWO (2).
10	RUN REFRIGERANT LINES UP THROUGH CHASE TO ATTIC AND ROOF MOUNTED CONDENSING UNITS.
11	RUN REFRIGERANT LINES THROUGH CHASE DOWN TO FIRST FLOOR CEILING AND 1ST FLOOR AIR HANDLING UNITS.
12	RUN REFRIGERANT LINES DOWN TO FIRST FLOOR CEILING AND 1ST FLOOR AIR HANDLING UNIT-2.
13	METAL MAKEUP AIR SUPPLY DUCT UP TO ROOF WELL SIDEWALL MOUNTED LOUVER.
14	CEILING HUNG INLINE EXHAUST VENTILATION FAN, CONTROLLED BY WALL MOUNTED THERMOSTAT.
15	CARBON DIOXIDE (CO2) SENSOR MOUNTED IN RETURN AIR DUCT. MANUFACTURER: ACME ENGINEERING PRODUCTS MODEL #: CO2-2000 SENSOR SHALL BE INTERLOCKED WITH MOTORIZED DAMPER FOR DEMAND VENTILATION.
16	CARBON MONOXIDE (CO) SENSOR MOUNTED ON WALL AT 5 FT. AFF. PROVIDED BY AIRVAC 911 MANUFACTURER AND INTERLOCKED WITH OPERATION OF AUTOMATIC VEHICLE EXHAUST CONTROL SYSTEM TO ACTIVATE WHEN VEHICLES IDLING IN THE EQUIPMENT BAY.

N

PARTIAL - MECHANICAL SECOND FLOOR PLAN

SCALE: 1/4"=1'-0"

CURRIE SOWARDS AGUILA ARCHITECTS

Architects, Planners & Interior Designers

AA26001584
134 N.E. 1st Avenue
Delray Beach, Florida 33444
TEL: 561 276-4951
FAX: 561 243-8184
E-mail: office@csa-architects.com

ISSUED FOR : DRC 11.29.2011
AAC 01.18.2012
AAC (RESUBMITTAL) 03.21.2012
P&Z 05.01.2012
BIDS 08.06.2012

PERMIT 08.06.2012

CONSTRUCTION

SEAL

DANIEL E. THOMPSON LICENSE NO. 33289 STATE OF FLORIDA PROFESSIONAL ENGINEER

PROJECT TITLE

CITY OF POMPANO BEACH FIRE STATION 103

3721 N.E. 12th Avenue
POMPANO BEACH, FL 33064

REVISIONS

THESE DRAWINGS ARE PREPARED PER ESTABLISHED INDUSTRY STANDARDS AND REPRESENT THE ARCHITECT AND ENGINEERS DESIGN CONCEPT. THEY ARE NOT INTENDED TO PROVIDE EVERY DETAIL OR CONDITION REQUIRED TO CONSTRUCT THE BUILDING. THE CONTRACTOR THROUGH SUBMITTALS AND OTHER COORDINATION EFFORTS IS FULLY RESPONSIBLE FOR PROVIDING A COMPLETE AND OPERATIONAL BUILDING WHETHER INDICATED ON THE PLANS OR NOT.

TYEC HVAC PLUMBING ELECTRICAL
THOMPSON & YOUNGROSS ENGINEERING CONSULTANTS, LLC
TO THE BEST OF MY KNOWLEDGE, THE PLANS AND SPECIFICATIONS COMPLY WITH THE MINIMUM APPLICABLE BUILDING CODE.
DANIEL E. THOMPSON FLA. REG. NO. 33289
ANDREW J. YOUNGROSS FLA. REG. NO. 51758
CERTIFICATE of AUTHORIZATION NO. 25996
112 S.E. 10th STREET DELRAY BEACH, FL 33483 E-MAIL: tec@tecfla.com
TEL: 561-274-0200 FAX: 561-274-0222 www.tecfla.com

08.06.2012 BID-PERMIT SET

FILE NUMBER 11127-M-1.2.DWG

DRAWING TITLE
PARTIAL SECOND FLOOR PLAN - MECHANICAL

DATE 08.06.2012 | DRAWN BY MB

JOB NUMBER 110102 / 11127

DRAWING NUMBER

M-1.2

THIS DOCUMENT IS THE PROPERTY OF CURRIE SOWARDS AGUILA ARCHITECTS INC. ALL RIGHTS ARE RESERVED. ANY POSSESSION, REPRODUCTION OR OTHER USE OF THIS DOCUMENT, WITHOUT THE WRITTEN CONSENT OF CURRIE SOWARDS AGUILA ARCHITECTS INC., IS PROHIBITED.

PLAN KEY NOTES

1	PROVIDE MINIMUM OF 10 FEET CLEARANCE BETWEEN EXHAUST OUTLET AND NEAREST OUTDOOR AIR INTAKE.
2	PROVIDE 48" WIDE CONDENSING UNIT STAND FOR CONDENSING UNIT. TYPICAL. SEE DETAILS FOR STAND HEIGHT ABOVE ROOF. HEIGHT OF STAND AND CONDENSING UNITS IS 5'-9" ABOVE ROOF DECK.
3	RUN REFRIGERANT LINES UP THROUGH CHASE TO ATTIC AND ROOF MOUNTED CONDENSING UNITS.
4	16"x10" METAL OUTDOOR AIR DUCT ROUTED IN ATTIC FROM SIDEWALL MOUNTED LOUVER TO CEILING MOUNTED KITCHEN HOOD SUPPLY FAN SF-1.
5	PROVIDE MANUFACTURER RECOMMENDED CLEARANCES. TYPICAL.
6	10"x10" METAL EXHAUST AIR DUCT ROUTED IN ATTIC FROM SIDEWALL MOUNTED LOUVER TO 2ND FLOOR TOILET EXHAUST FANS.
7	REFRIGERANT LINE ROOF SUPPORT. TYPICAL.
8	24"x54" WEATHER-PROOF LOUVER WITH INSECT SCREEN. UNITED ENERTECH MODEL #DC-SED-5-1 OR APPROVED EQUIVALENT. LOUVERS TO BE FACTORY FINISHED. SEE ARCHITECTURAL DRAWINGS.
9	24"x12" WEATHER-PROOF LOUVER WITH INSECT SCREEN. UNITED ENERTECH MODEL #DC-SED-5-1 OR APPROVED EQUIVALENT. LOUVERS TO BE FACTORY FINISHED. SEE ARCHITECTURAL DRAWINGS.

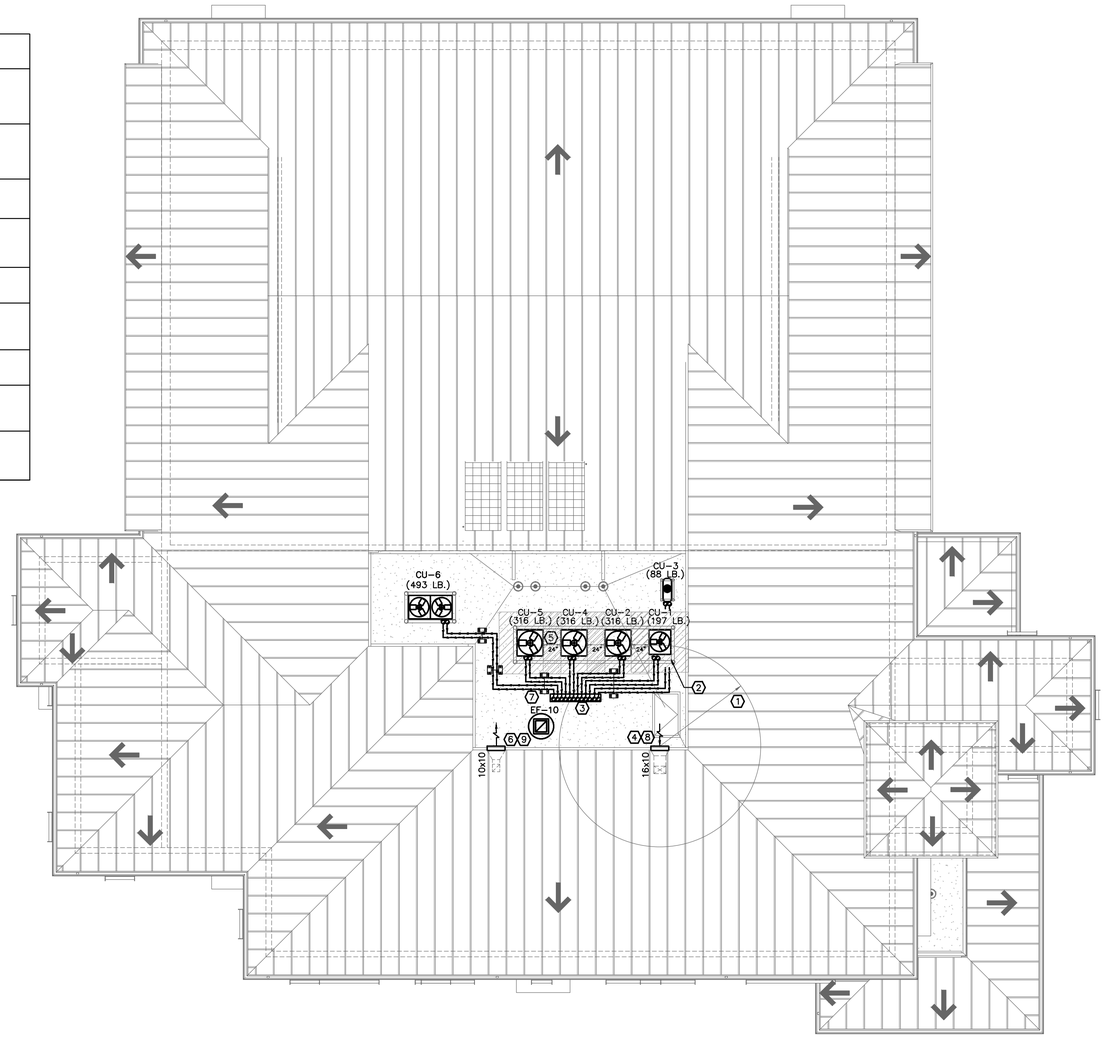

N

MECHANICAL ROOF PLAN

SCALE: 1/8"=1'-0"

CURRIE
SOWARDS
AGUILA
ARCHITECTS

Architects, Planners
& Interior Designers

AA26001584
134 N.E. 1st Avenue
Delray Beach, Florida 33444
TEL: 561 276-4951
FAX: 561 243-8184
E-mail: office@csa-architects.com

ISSUED FOR : DRC 11.29.2011
AAC 01.18.2012
AAC (RESUBMITTAL) 03.21.2012
P&Z 05.01.2012
BIDS 08.06.2012

PERMIT 08.06.2012

CONSTRUCTION

SEAL

DANIEL E. THOMPSON
LICENSE
NO. 33289
STATE OF
FLORIDA
PROFESSIONAL ENGINEER

PROJECT TITLE

CITY OF
POMPANO BEACH
FIRE STATION 103

3721 N.E. 12th Avenue
POMPANO BEACH, FL 33064

REVISIONS

THESE DRAWINGS ARE PREPARED PER ESTABLISHED INDUSTRY STANDARDS AND REPRESENT THE ARCHITECT AND ENGINEERS DESIGN CONCEPT. THEY ARE NOT INTENDED TO PROVIDE EVERY DETAIL OR CONDITION REQUIRED TO CONSTRUCT THE BUILDING. THE CONTRACTOR THROUGH SUBMITTALS AND OTHER COORDINATION EFFORTS IS FULLY RESPONSIBLE FOR PROVIDING A COMPLETE AND OPERATIONAL BUILDING WHETHER INDICATED ON THE PLANS OR NOT.

FILE NUMBER
11127-M-1.3.DWG

DRAWING TITLE
ROOF
PLAN -
MECHANICAL

DATE 08.06.2012 | DRAWN BY MB

JOB NUMBER
110102 / 11127

DRAWING NUMBER
M-1.3

08.06.2012 BID-PERMIT SET

TYEC HVAC PLUMBING ELECTRICAL
THOMPSON & YOUNGROSS ENGINEERING CONSULTANTS, LLC
TO THE BEST OF MY KNOWLEDGE, THE PLANS AND SPECIFICATIONS COMPLY WITH THE MINIMUM APPLICABLE BUILDING CODE.
DANIEL E. THOMPSON
FLA. REG. NO. 33289
ANDREW J. YOUNGROSS
FLA. REG. NO. 51758
CERTIFICATE of AUTHORIZATION NO. 25996
112 S.E. 10th STREET
DELRAY BEACH, FL. 33483
E-MAIL: tec@tecfla.com
TEL: 561-274-0200
FAX: 561-274-0222
www.tecfla.com

THIS DOCUMENT IS THE PROPERTY OF CURRIE SOWARDS AGUILA ARCHITECTS INC. ALL RIGHTS ARE RESERVED. ANY POSSESSION, REPRODUCTION OR OTHER USE OF THIS DOCUMENT, WITHOUT THE WRITTEN CONSENT OF CURRIE SOWARDS AGUILA ARCHITECTS INC., IS PROHIBITED.

HOOD INFORMATION

HOOD NO.	MODEL	LENGTH	MAX. COOKING TEMP.	EXHAUST PLENUM: TOTAL EXH. CFM	EXHAUST RISER(S): WIDTH	LENG.	DIA.	CFM	S.P.	SUPPLY PLENUM: TOTAL SUP. CFM	SUPPLY RISER(S): WIDTH	LENG.	DIA.	CFM	S.P.	HOOD CONSTRUCTION	HOOD CONFIG.: END TO END	ROW
1	4224 ND-2-PSPF	9' 0.00"Nom. 9' 0.00"OD	450 Deg.	2340	12"	16"		2340	-0.604"	2106						304 SS Where Exposed	ALONE	N/A

HOOD INFORMATION

HOOD NO.	FILTER(S): TYPE	QTY.	HEIGHT	LENGTH	LIGHT(S): QTY.	TYPE	WIRE GUARD	UTILITY CABINET(S): LOCATION	FIRE SYSTEM: TYPE	SIZE	ELECTRICAL: MODEL #	SWITCHES: QUANTITY	LOCATION	FIRE SYSTEM PIPING	HOOD WEIGHT
1	Alum Baffle w/ Handles	3	16"	16"	3	Incandescent Light Fix	NO	Right	Ansul R102	3.0	211110KT	1 Light 1 Fan	Outside	YES	580 LBS.
		3	16"	20"											

PERFORATED SUPPLY PLENUM(S)

HOOD NO.	POS.	LENGTH	WIDTH	HEIGHT	RISER(S): WIDTH	LENG.	DIA.	CFM	S.P.
1	Front	120"	12"	6"	10"	24"		1053	0.170"
					10"	24"		1053	0.170"

CAPTIVE-AIRE HOODS ARE BUILT IN COMPLIANCE WITH
NFPA #96
NSF
UL 710 & ULC710 STANDARDS
E.T.L. LISTED 3054804-001

FAN INFORMATION

FAN UNIT NO.	FAN UNIT MODEL #	EXHAUST FAN: MODEL	TAG	CFM	S.P.	RPM	H.P.	ø	VOLT	FLA	SUPPLY FAN: BLOWER	HOUSING	TAG	CFM	S.P.	RPM	H.P.	ø	VOLT	FLA
1	NCA14FA	NCA14FA		2340	- 1.250"	1394	1.000	1	208	7.0										
2	INLINE1L-G10										G10	INLINE.1L		2106	0.800"	1096	1.500	1	208	10.2

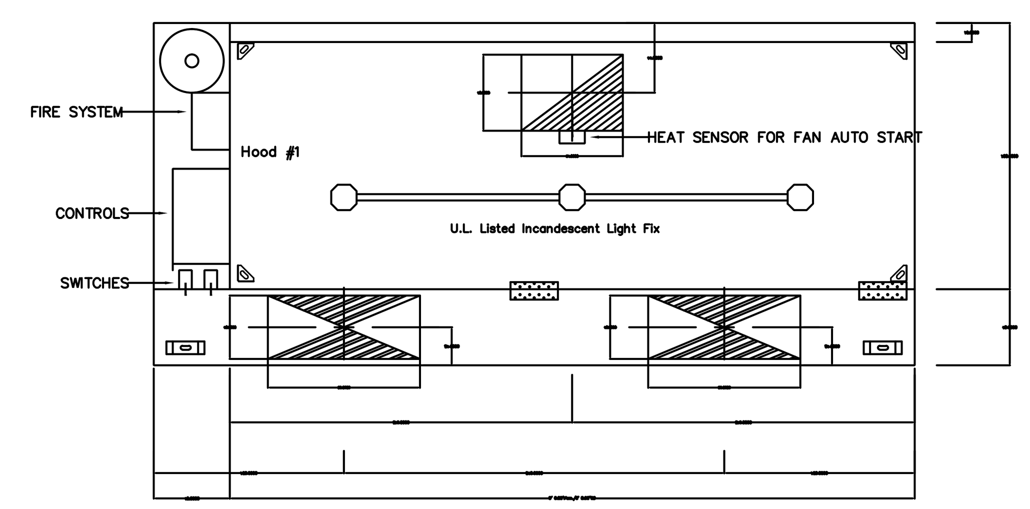

PLAN VIEW – Hood #1 – 9' 0.00" LONG 4224ND-2-PSP-F

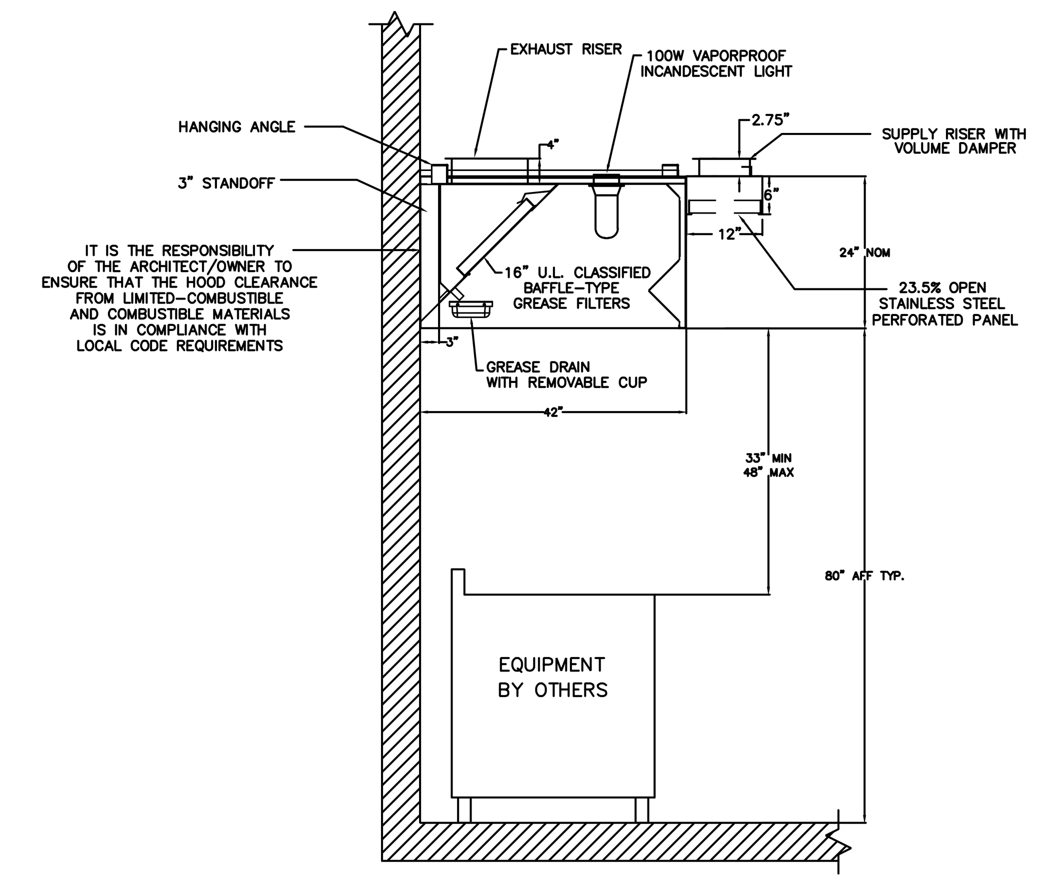

SECTION VIEW – MODEL 4224-ND-2 with PSP Accessory

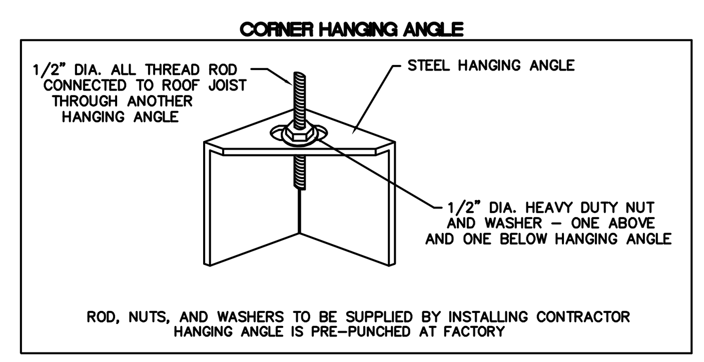

CAFA SERIES UPBLAST EXHAUST FANS (UL762)

NCAFA-UL762
REV.#5 08/20/2003

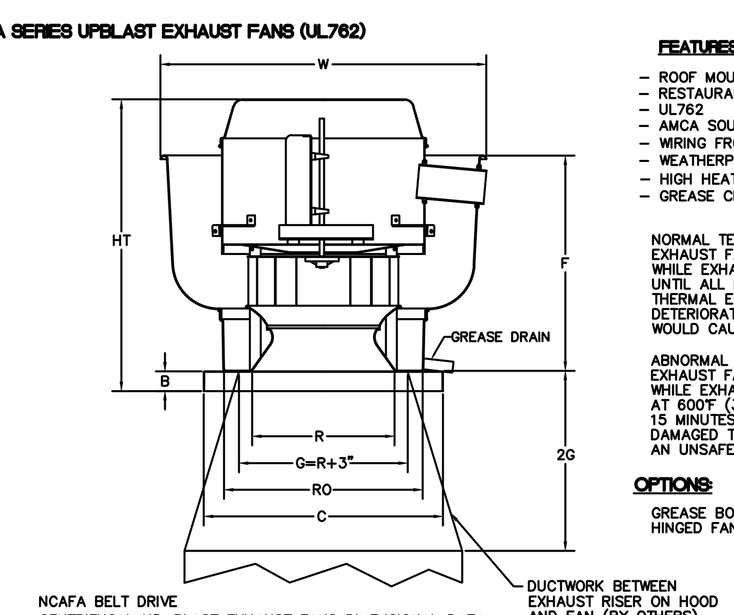

FEATURES:

- ROOF MOUNTED FANS
- RESTAURANT MODEL
- UL762
- AMCA SOUND AND AIR CERTIFIED
- WIRING FROM MOTOR TO DISCONNECT SWITCH
- WEATHERPROOF DISCONNECT
- HIGH HEAT OPERATION 300°F (149°C)
- GREASE CLASSIFICATION TESTING

NORMAL TEMPERATURE TEST
EXHAUST FAN MUST OPERATE CONTINUOUSLY WHILE EXHAUSTING AIR AT 300°F (149°C) UNTIL ALL FAN PARTS HAVE REACHED THERMAL EQUILIBRIUM, AND WITHOUT ANY DETERIORATING EFFECTS TO THE FAN WHICH WOULD CAUSE UNSAFE OPERATION.

ABNORMAL FLARE-UP TEST
EXHAUST FAN MUST OPERATE CONTINUOUSLY WHILE EXHAUSTING BURNING GREASE VAPORS AT 600°F (316°C) FOR A PERIOD OF 15 MINUTES WITHOUT THE FAN BECOMING DAMAGED TO ANY EXTENT THAT COULD CAUSE AN UNSAFE CONDITION.

OPTIONS:

GREASE BOX
HINGED FAN

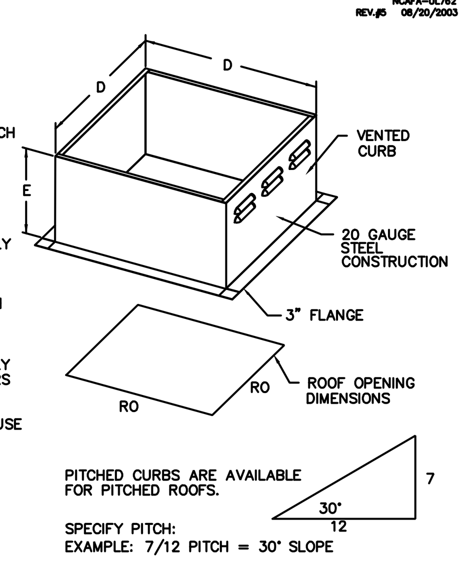

PITCHED CURBS ARE AVAILABLE FOR PITCHED ROOFS.

SPECIFY PITCH:
EXAMPLE: 7/12 PITCH = 30° SLOPE

NCAFA BELT DRIVE
CENTRIFUGAL UP-BLAST EXHAUST FANS DIMENSIONAL DATA

FAN MODEL	HT	W	B	C	F	R	RO	WEIGHT LB
NCA14FA	30 1/2	33 3/4	2	24 3/4	23	14 7/8	20	140

CURB DIMENSIONAL DATA

FAN MODEL	D	E
NCA14FA	23	20

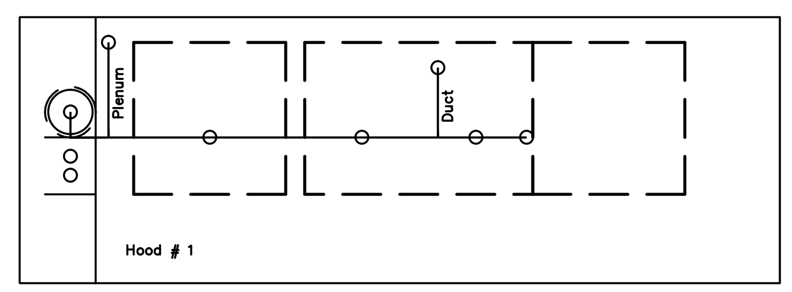

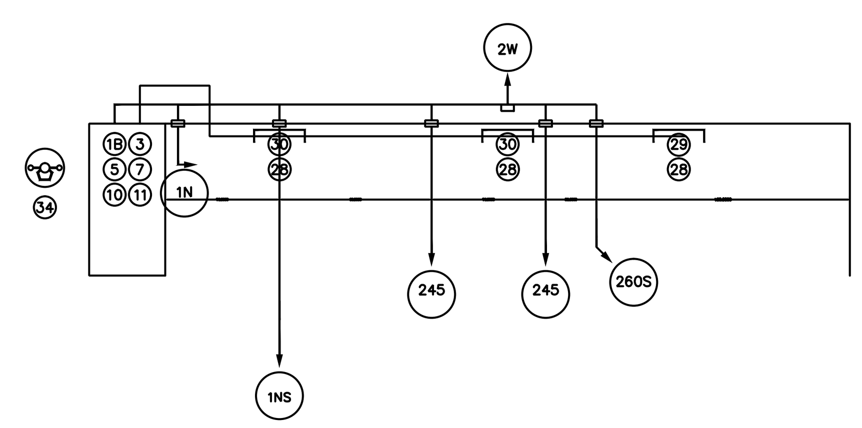

INLINE FILTERED SUPPLY FAN

INLINE
REV.#8 12/23/2004

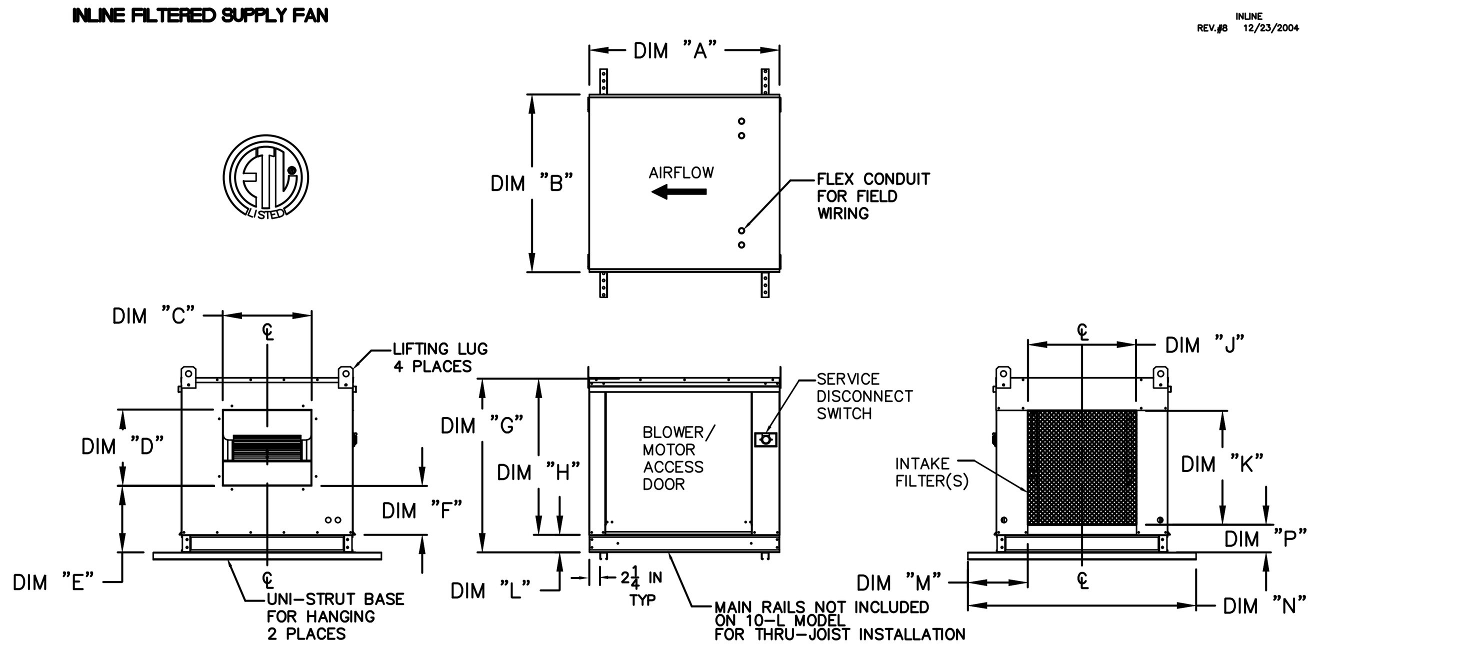

UNIT INFORMATION: BLOWER	FILTER SIZE	BLOWER SIZE	WEIGHT (lbs)	UNIT DIMENSIONS: A	B	C	D	E	F	G	H	J	K	L	M	N	P
10"-L	(1) 16IN x 20IN	10 IN	195	32 1/8	27 3/8	13 1/4	11 1/2	N/A	8 1/8	N/A	22 1/16	16	18	N/A	5 1/16	36	2 1/8

NOTES:
1) ALL DIMENSIONS ARE NOMINAL AND GIVEN IN INCHES.
2) ACCESS DOORS LOCATED ON BOTH SIDES OF UNIT.
3) INSULATED CONSTRUCTION.

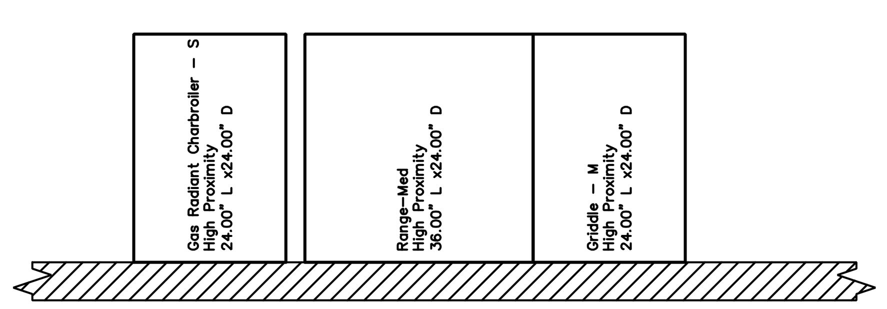

NOTES
- FIELD PIPE DROPS AS SHOWN
  SLEEVING, ELBOWS, TEES, AND NOZZLES SUPPLIED BY CAS
- RELOCATE NOZZLES IF FLOW PATTERN IS BLOCKED BY SHELVING, SALAMANDERS, ETC.
- MAXIMUM 9 ELBOWS IN SUPPLY LINE.
- MINIMUM 72 INCHES OF AGENT LINE FROM TANK TO FIRST NOZZLE.
- IF APPLICABLE, PRE-PIPED CHARBROILER DROPS ARE SHIPPED LOOSE.
- FACTORY PIPING EXTENDS A MAXIMUM OF 6" ABOVE THE TOP OF THE HOOD.

- APPLIANCE DIMENSIONS LISTED REPRESENT THE COOKING SURFACE SIZE, NOT THE OVERALL APPLIANCE SIZE.

- THIS FIRE SYSTEM COMPLIES WITH U.L. 300 REQUIREMENTS

Job #: 1069214
Job Name: POMPANO BEACH FIRE STATION # 103
Drawn By:
System Size: ANSUL-3.0 Total FP required: 10
Hood # 1 9' 0.00" Long x 42" Wide x 24" High
Riser # 1 Size: 12" x 16"

ELECTRICAL PREWIRE PACKAGE

ELECTRICAL PREWIRE PACKAGE	JOB NAME	DATE
DRAWING NUMBER 21111002	JOB NUMBER	DRAWN BY

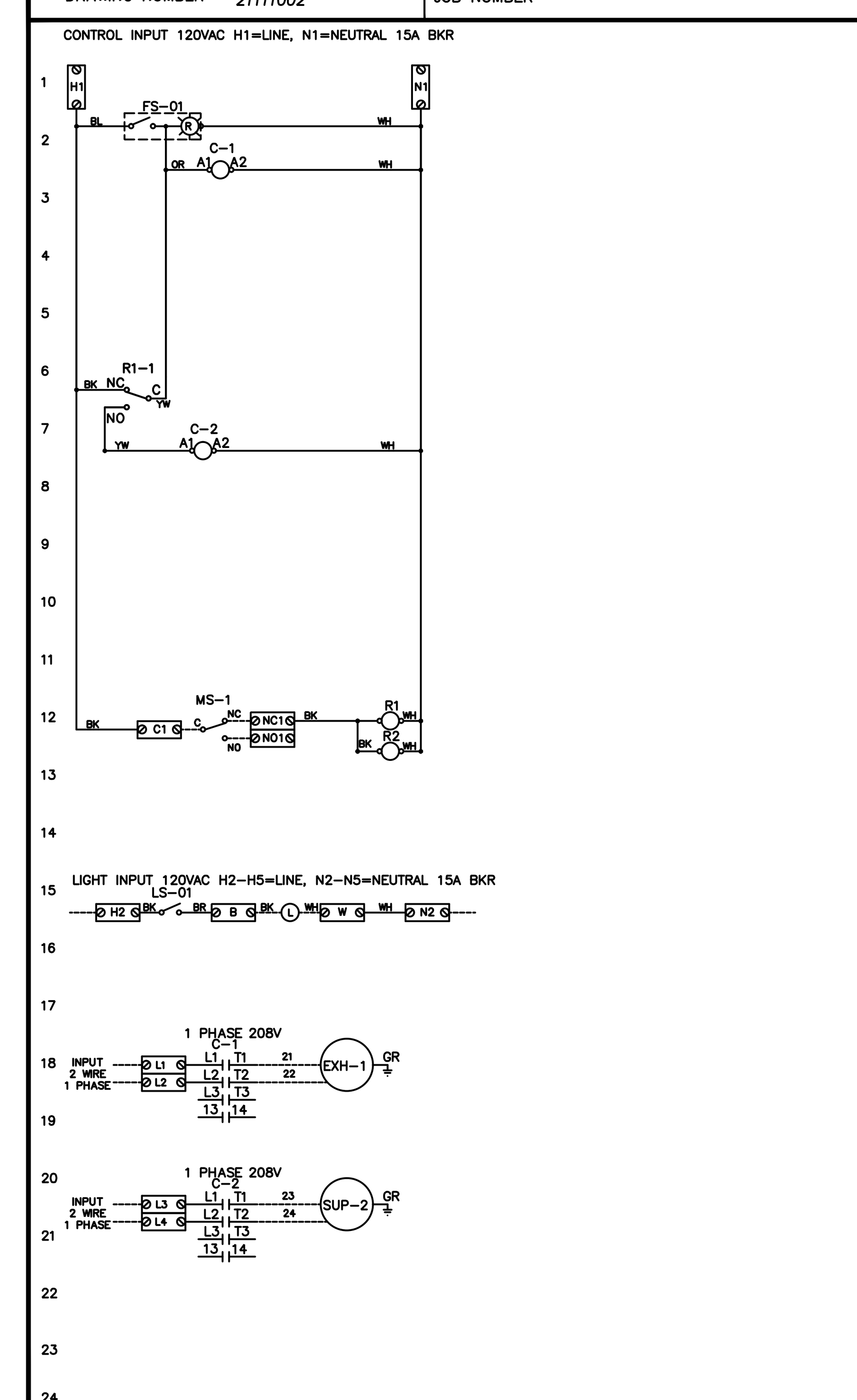

Electrical Package Description

220V/1Ph, W/ 1 Exhaust Fan, 1 Supply Fan, Exhaust in Fire

Component Idenification

Label	Description
ST	Starter
FS	Fan Switch (Lighted)
MS	MicroSwitch (Ansul or PyroChem)
R1	Relay DPDT
LS	Light Switch
L	Hood Light(s)
GP	General Purpose Relay DPDT
TX	Transformer
C	Contactor
G	Ground
AF	Air Flow Switch

Spare Relay Contacts
C-RD
NO-BL
NC-PR

MS-1, MS-2 MicroSwitch: Ansul	Pyrochem
C-RD	C-RD
NO-BK	NO-BK
NC-BR	NC-BR

R1-R5 RELAY TERMINATIONS: 1 NC 3; 4 NO 6; 7 COM 9; A COIL B

SPARE RELAY CONTACTS CAN BE USED TO CONTROL ITEMS REQUIRING SHUT DOWN WHEN THE FIRE SYSTEM DISCHARGES, SUCH AS SHUNT TRIP, SIGNALS, ETC...

Spare Relay Contacts
R2-1: NO3, NC3, C3
R2-2: NO4, NC4, C4
TERMINAL FOR FIELD WIRING TO BUILDING FIRE PANEL, DRY CONTACTS FOR SIGNAL ONLY
MS-2: NC2, NO2, C2

Motor	Type	PH	Volt	HP	FLA	BREAKER
Exh-1	Exh	1	208			
Sup-2	Sup	1	208			

NOTES

----- DENOTES FIELD WIRING
——— DENOTES INTERNAL WIRING

WIRE COLOR

BK – BLACK
BL – BLUE
BR – BROWN
OR – ORANGE
RD – RED
WH – WHITE
YW – YELLOW
GY – GRAY
PR – PURPLE
OR/BL – ORANGE/BLUE (STRIPE)
BL/RD – BLUE/RED (STRIPE)
RD/GN – RED/GREEN (STRIPE)

DRAWING SHOWN DE-ENERGIZED

NOTE: IF WALL MOUNT PREWIRE, OR FIELD INSTALLED FIRE SYSTEM MICROSWITCH, THE TERMINALS SHOWING FACTORY WIRING MUST BE FIELD WIRED.

12 x 18 x 6 Box Size

CAPTIVEAIRE

JOB	POMPANO BEACH FIRE STATION # 103		
LOCATION	POMPANO BEACH, FL		
DATE	07/16/2012	JOB #	1069214
DWG #	P.BCH.F.S.#103	DRAWN BY	JTS
REV.		SCALE	1/2"

KITCHEN HOOD DETAILS AND SCHEDULES

N.T.S.

CURRIE SOWARDS AGUILA ARCHITECTS
Architects, Planners & Interior Designers
AA26001584
134 N.E. 1st Avenue
Delray Beach, Florida 33444
TEL: 561 276-4951
FAX: 561 243-8184
E-mail: office@csa-architects.com

ISSUED FOR : DRC 11.29.2011
AAC..........01.18.2012
AAC (RESUBMITTAL) 03.21.2012
P&Z..........05.01.2012
BIDS 08.06.2012

PERMIT 08.06.2012

CONSTRUCTION

SEAL
DANIEL E. THOMPSON LICENSE NO. 33289 STATE OF FLORIDA PROFESSIONAL ENGINEER

PROJECT TITLE
CITY OF POMPANO BEACH FIRE STATION 103

3721 N.E. 12th Avenue
POMPANO BEACH, FL 33064

REVISIONS

THESE DRAWINGS ARE PREPARED PER ESTABLISHED INDUSTRY STANDARDS AND REPRESENT THE ARCHITECT AND ENGINEERS DESIGN CONCEPT. THEY ARE NOT INTENDED TO PROVIDE EVERY DETAIL OR CONDITION REQUIRED TO CONSTRUCT THE BUILDING. THE CONTRACTOR THROUGH SUBMITTALS AND OTHER COORDINATION EFFORTS IS FULLY RESPONSIBLE FOR PROVIDING A COMPLETE AND OPERATIONAL BUILDING WHETHER INDICATED ON THE PLANS OR NOT.

TYEC HVAC PLUMBING ELECTRICAL
THOMPSON & YOUNGROSS ENGINEERING CONSULTANTS, LLC
TO THE BEST OF MY KNOWLEDGE, THE PLANS AND SPECIFICATIONS COMPLY WITH THE MINIMUM APPLICABLE BUILDING CODE.
DANIEL E. THOMPSON
FLA. REG. NO. 33289
ANDREW J. YOUNGROSS
FLA. REG. NO. 51758
CERTIFICATE of AUTHORIZATION NO. 25996
112 S.E. 10th STREET
DELRAY BEACH, FL. 33483
E-MAIL: tec@tecfla.com
TEL: 561-274-0200
FAX: 561-274-0222
www.tecfla.com

08.06.2012 BID-PERMIT SET

FILE NUMBER
11127-M-2.1.DWG

DRAWING TITLE
KITCHEN HOOD DETAILS AND SCHEDULES

DATE 08.06.2012 | DRAWN BY MB

JOB NUMBER
110102 / 11127

DRAWING NUMBER
M-2.1

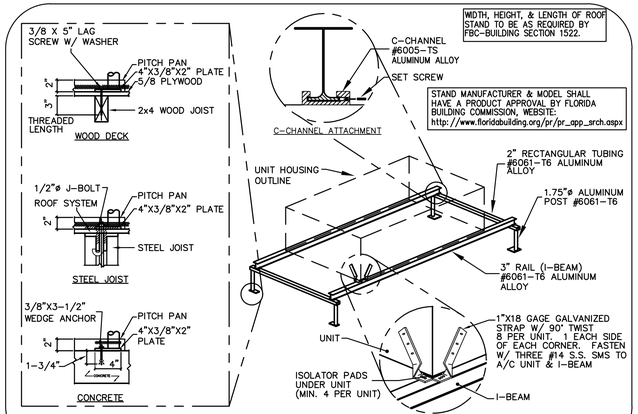

WIDTH, HEIGHT, & LENGTH OF ROOF STAND TO BE AS REQUIRED BY FBC-BUILDING SECTION 1522.

STAND MANUFACTURER & MODEL SHALL HAVE A PRODUCT APPROVAL BY FLORIDA BUILDING COMMISSION, WEBSITE: http://www.floridabuilding.org/pr/pr_app_srch.aspx

A/C ROOF EQUIPMENT MOUNTING DETAIL

N.T.S

WORKING CLEARANCES

WIDTH OF EQUIPMENT	HEIGHT ABOVE ROOF SURFACE
UP TO 24"	14"
25" TO 36"	18"
37" TO 48"	24"
49" TO 60"	30"
61" AND WIDER	48"

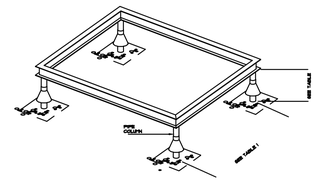

MECHANICAL EQUIPMENT STAND

N.T.S

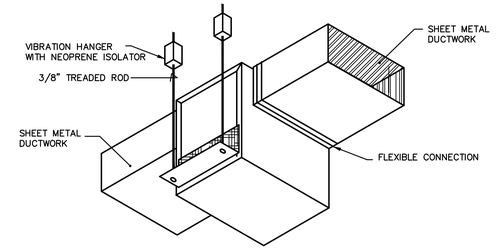

NOTES:
1. PROVIDE BACKDRAFT DAMPER
2. FLASH & SEAL WALL AND ROOF CAP
3. PROVIDE INTERNAL ISOLATION AND SOUND INSULATION
4. SUPPORT FAN FROM STRUCTURE

IN LINE CEILING FAN

N.T.S

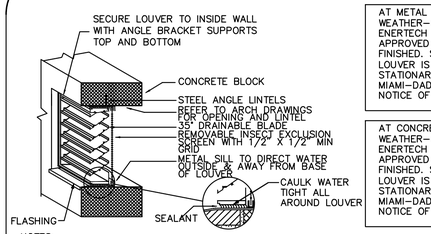

AT METAL FRAMING:
WEATHER-PROOF LOUVER W/SCREEN. UNITED ENERTECH MODEL #DCSED-5-1 OR ARCHITECT APPROVED EQUAL. LOUVER TO BE FACTORY FINISHED. SEE ARCHITECTURAL PLANS. LOUVER IS TO BE RAIN RESISTANT STATIONARY, EXTRUDED ALUMINUM. MIAMI-DADE COUNTY, FLORIDA APPROVED. NOTICE OF ACCEPTANCE NUMBER: 05-1005.03

AT CONCRETE BLOCK:
WEATHER-PROOF LOUVER W/SCREEN. UNITED ENERTECH MODEL #FL-D-4 OR ARCHITECT APPROVED EQUAL. LOUVER TO BE FACTORY FINISHED. SEE ARCHITECTURAL PLANS. LOUVER IS TO BE RAIN RESISTANT STATIONARY, EXTRUDED ALUMINUM. MIAMI-DADE COUNTY, FLORIDA APPROVED. NOTICE OF ACCEPTANCE NUMBER: 08-0902.08

NOTES:
1 OVERALL SIZE OF OPENING SHOULD BE 1/4" AND 1/2" GREATER IN BOTH DIRECTIONS THAN EXTERNAL DIMENSIONS OF LOUVER FOR SIZES ≤ 48" AND > 48", RESPECTIVELY
2 MAX LOUVER WIDTH ≤ 5FT. USE MULLION CONNECTED SECTIONS FOR GREATER WIDTHS
3 CAULK AND SEAL AROUND PERIMETER OF LOUVER SECTION AT WALL
4 PROVIDE ALUMINUM OR GALV EXPANDED BIRD EXCLUSION SCREEN ON INSIDE (OR OUTSIDE) OF LOUVER. (MIN FREE AREA 80% OF GROSS AREA) ATTACH TO OUTSIDE IF BLADE SEPARATION IS > 2 1/2"
5 CONSTRUCT EXTRUDED LOUVER OF NON-FERROUS CORROSION RESISTANT MATERIAL AND SECURE WITH SS OR ALUMINUM FASTENERS

WALL LOUVER DETAIL

N.T.S.

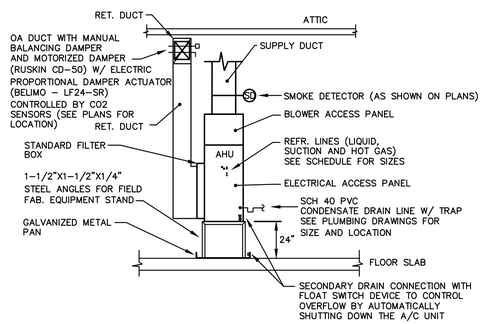

AIR-HANDLING UNIT MOUNTING DETAIL

N.T.S

DO NOT INSTALL BIRDSCREEN

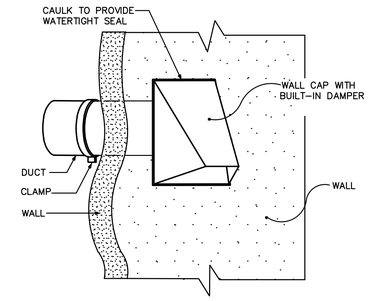

WALL CAP DETAIL FOR DRYER

N.T.S

MDETI01

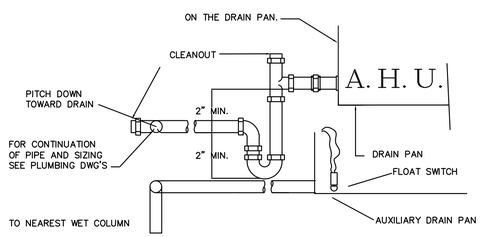

NOTE:

MECHANICAL CONTRACTOR WILL COORDINATE WITH PLUMBING CONTRACTOR CONDENSATE SYSTEM INSTALLATION (TO BE PROVIDED AND INSTALLED BY PLUMBING CONTRACTOR)

TYPICAL CONDENSATE DRAIN TRAP DETAIL

N.T.S

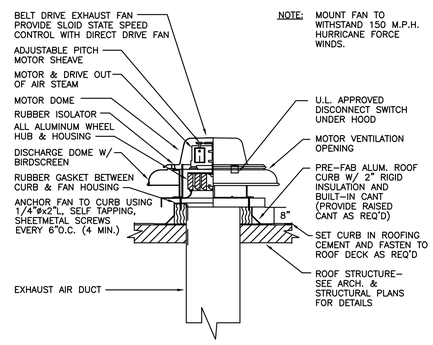

NOTE: MOUNT FAN TO WITHSTAND 150 M.P.H. HURRICANE FORCE WINDS.

EXHAUST FAN ON ROOF INSTALLATION DETAIL

N.T.S

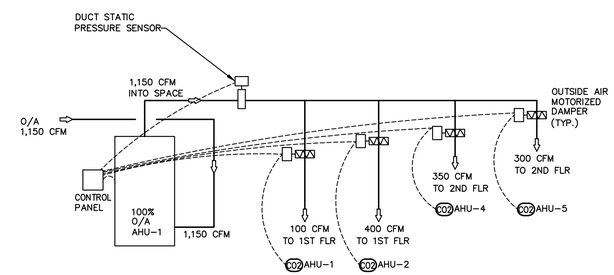

BUILDING OUTDOOR AIR CONTROL SCHEMATIC

N.T.S.

MECHANICAL DETAILS

N.T.S.

CURRIE SOWARDS AGUILA ARCHITECTS

Architects, Planners & Interior Designers

AA26001584
134 N.E. 1st Avenue
Delray Beach, Florida 33444
TEL: 561 276-4951
FAX: 561 243-8184
E-mail: office@csa-architects.com

ISSUED FOR : DRC 11.29.2011
AAC 01.18.2012
AAC (RESUBMITTAL) 03.21.2012
P&Z 05.01.2012
BIDS 08.06.2012

PERMIT 08.06.2012

CONSTRUCTION

SEAL

DANIEL E. THOMPSON LICENSE NO. 33289 STATE OF FLORIDA PROFESSIONAL ENGINEER

PROJECT TITLE

CITY OF POMPANO BEACH FIRE STATION 103

3721 N.E. 12th Avenue
POMPANO BEACH, FL 33064

REVISIONS

THESE DRAWINGS ARE PREPARED PER ESTABLISHED INDUSTRY STANDARDS AND REPRESENT THE ARCHITECT AND ENGINEER'S DESIGN CONCEPT. THEY ARE NOT INTENDED TO PROVIDE EVERY DETAIL OR CONDITION REQUIRED TO CONSTRUCT THE BUILDING. THE CONTRACTOR THROUGH SUBMITTALS AND OTHER COORDINATION EFFORTS IS FULLY RESPONSIBLE FOR PROVIDING A COMPLETE AND OPERATIONAL BUILDING WHETHER INDICATED ON THE PLANS OR NOT.

FILE NUMBER 11127-M-2.2.DWG

DRAWING TITLE MECHANICAL DETAILS

DATE 08.06.2012 | DRAWN BY MB

JOB NUMBER 110102 / 11127

DRAWING NUMBER M-2.2

TYEC HVAC PLUMBING ELECTRICAL
THOMPSON & YOUNGROSS ENGINEERING CONSULTANTS, LLC
TO THE BEST OF MY KNOWLEDGE, THE PLANS AND SPECIFICATIONS COMPLY WITH THE MINIMUM APPLICABLE BUILDING CODE.
DANIEL E. THOMPSON FLA. REG. NO. 33289
ANDREW J. YOUNGROSS FLA. REG. NO. 51758
CERTIFICATE of AUTHORIZATION NO. 25996
112 S.E. 10th STREET DELRAY BEACH, FL. 33483 E-MAIL: tec@tecfla.com
TEL: 561-274-0200 FAX: 561-274-0222 www.tecfla.com

08.06.2012 BID-PERMIT SET

THIS DOCUMENT IS THE PROPERTY OF CURRIE SOWARDS AGUILA ARCHITECTS INC. ALL RIGHTS ARE RESERVED. ANY POSSESSION, REPRODUCTION OR OTHER USE OF THIS DOCUMENT, WITHOUT THE WRITTEN CONSENT OF CURRIE SOWARDS AGUILA ARCHITECTS INC., IS PROHIBITED.

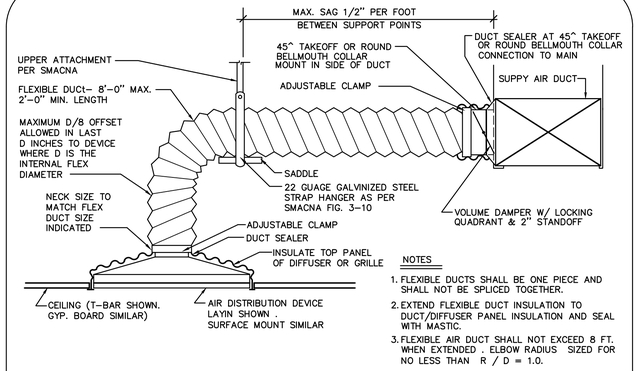

NOTES

1. FLEXIBLE DUCTS SHALL BE ONE PIECE AND SHALL NOT BE SPLICED TOGETHER.
2. EXTEND FLEXIBLE DUCT INSULATION TO DUCT/DIFFUSER PANEL INSULATION AND SEAL WITH MASTIC.
3. FLEXIBLE AIR DUCT SHALL NOT EXCEED 8 FT. WHEN EXTENDED . ELBOW RADIUS SIZED FOR NO LESS THAN R / D = 1.0.

FLEXIBLE DUCT TAKEOFF DETAIL

NTS

MDETH19

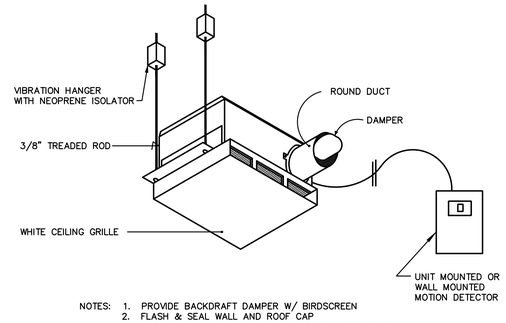

NOTES:
1. PROVIDE BACKDRAFT DAMPER W/ BIRDSCREEN
2. FLASH & SEAL WALL AND ROOF CAP
3. PROVIDE INTERNAL ISOLATION AND SOUND INSULATION
4. SUPPORT FAN FROM STRUCTURE
5. PROVIDE TIME DELAY SWITCH. INSTALLED BY ELECTRICAL CONTRACTOR.

CABINET CEILING FAN

N.T.S

MDETE09

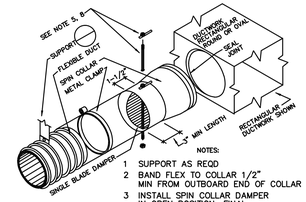

NOTES:
1 SUPPORT AS REQD
2 BAND FLEX TO COLLAR 1/2" MIN FROM OUTBOARD END OF COLLAR
3 INSTALL SPIN COLLAR DAMPER IN OPEN POSITION; FINAL ADJUSTMENT BY TAB CONTRACTOR
4 PULL FLEXIBLE DUCTWORK INSULATION UP TO END OF SPIN COLLAR AT EDGE OF RECTANGULAR DUCTWORK; SEAL VAPOR BARRIER W/GREY TAPE TO PREVENT MOISTURE MIGRATION
5 PROVIDE EXTENSION RODS TO ACCOMMODATE INSULATION, PULL TO EDGE OF DUCTWORK AS REQD AND SEAL TO EFFECT VAPOR BARRIER
6 POP RIVET OR SHEET METAL SCREWS, MIN 3 EA AT 120° INTERVALS, CONNECTING STOVEPIPE TO COLLAR. ENSURE RIVETS OR SCREWS DO NOT INTERFERE W/DAMPER
7 TAPE AND SEAL ALL JOINTS TO PREVENT LEAKAGE
8 INSTALL LOCKING QUADRANT AND HANDLE ON BOTTOM OF DUCT FOR EASY SERVICE (SHOWN ON TOP FOR EASE OF ILLUSTRATION ONLY)

SPIN COLLAR FLEX DUCT CONNECTOR W/ DAMPER

N.T.S

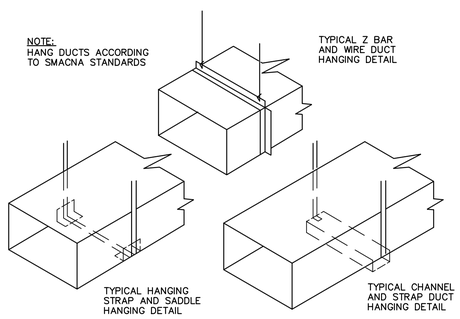

METHODS OF HANGING DUCTS DETAIL

N.T.S.

MDETH21

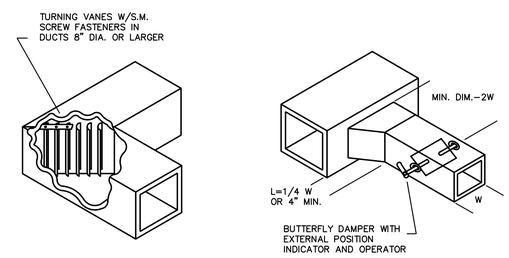

ELBOW

BRANCH TAKE–OFF
& DAMPER ASSY.

TYPICAL DUCT DETAIL

N.T.S

MDETH02

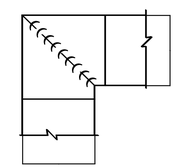

1. ALL VANED ELBOWS SHALL BE CONSTRUCTED AND INSTALLED AS DETAILED BY SMACNA.
2. WHEN W, DOES NOT EQUAL W2 VANE SHALL BE SINGLE VANE TYPE REGARDLESS OF W DIMENSION.
3. ALL SINGLE VANES SHALL HAVE A 2 INCH RADIUS, 1 1/2 INCH MAXIMUM SPACE BETWEEN VANES AND A 3/4 INCH TRAILING EDGE.
4. WHEN W, EQUALS W2 AND W, IS GREATER THAN 20 INCHES VANES SHALL BE DOUBLE VANE TYPE.

SQUARE VANED ELBOW DETAIL

N.T.S

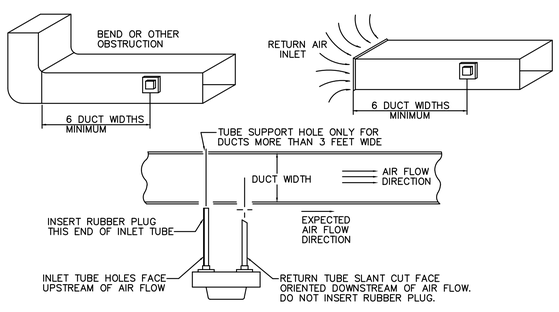

TYPICAL DUCT DETECTOR INSTALLATION

N.T.S

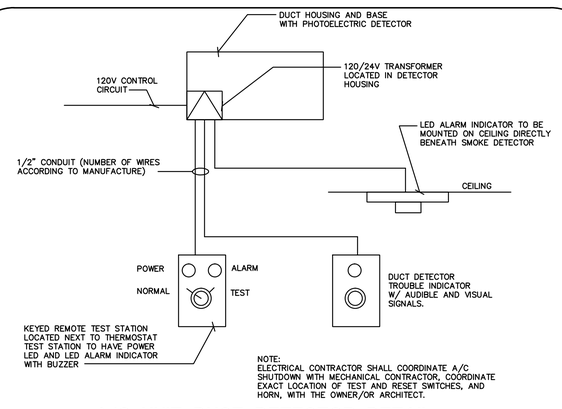

NOTE:
ELECTRICAL CONTRACTOR SHALL COORDINATE A/C SHUTDOWN WITH MECHANICAL CONTRACTOR, COORDINATE EXACT LOCATION OF TEST AND RESET SWITCHES, AND HORN, WITH THE OWNER/OR ARCHITECT.

A/C UNIT DUCT DETECTOR DETAIL

N.T.S

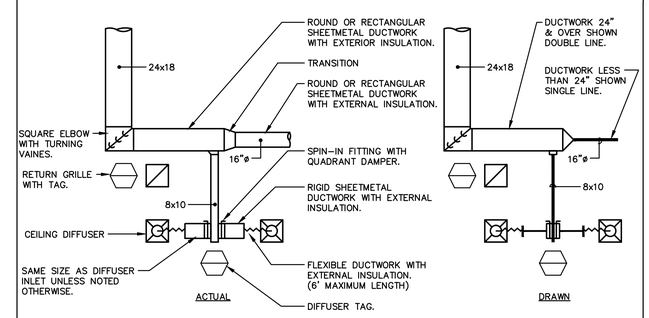

DUCTWORK LEGENDS-CONSTANT VOLUME SYSTEMS

N.T.S

MDETD07

MECHANICAL DETAILS

N.T.S.

CURRIE
SOWARDS
AGUILA
ARCHITECTS

Architects, Planners
& Interior Designers

AA26001584
134 N.E. 1st Avenue
Delray Beach, Florida 33444
TEL: 561 276–4951
FAX: 561 243–8184
E–mail: office@csa–architects.com

ISSUED FOR : DRC 11.29.2011
AAC 01.18.2012
AAC (RESUBMITTAL) 03.21.2012
P&Z..... 05.01.2012
BIDS 08.06.2012

PERMIT 08.06.2012

CONSTRUCTION

SEAL

DANIEL E. THOMPSON
LICENSE
NO. 33289
STATE OF
FLORIDA
PROFESSIONAL ENGINEER

PROJECT TITLE

CITY OF
POMPANO BEACH
FIRE STATION 103

3721 N.E. 12th Avenue
POMPANO BEACH, FL 33064

REVISIONS

THESE DRAWINGS ARE PREPARED PER ESTABLISHED INDUSTRY STANDARDS AND REPRESENT THE ARCHITECT AND ENGINEER'S DESIGN CONCEPT. THEY ARE NOT INTENDED TO PROVIDE EVERY DETAIL OR CONDITION REQUIRED TO CONSTRUCT THE BUILDING. THE CONTRACTOR THROUGH SUBMITTALS AND OTHER COORDINATION EFFORTS IS FULLY RESPONSIBLE FOR PROVIDING A COMPLETE AND OPERATIONAL BUILDING WHETHER INDICATED ON THE PLANS OR NOT.

FILE NUMBER
11127–M–2.3.DWG

DRAWING TITLE
MECHANICAL
DETAILS

TYEC HVAC PLUMBING ELECTRICAL
THOMPSON & YOUNGROSS ENGINEERING CONSULTANTS, LLC
TO THE BEST OF MY KNOWLEDGE, THE PLANS AND SPECIFICATIONS COMPLY WITH THE MINIMUM APPLICABLE BUILDING CODE.
DANIEL E. THOMPSON
FLA. REG. NO. 33289
ANDREW J. YOUNGROSS
FLA. REG. NO. 51758
CERTIFICATE of AUTHORIZATION NO. 25996
112 S.E. 10th STREET
DELRAY BEACH, FL. 33483
E–MAIL: tec@tecfla.com
TEL: 561–274–0200
FAX: 561–274–0222
www.tecfla.com

DATE 08.06.2012 | DRAWN BY MB

JOB NUMBER
110102 / 11127

DRAWING NUMBER
M-2.3

08.06.2012 BID-PERMIT SET

THIS DOCUMENT IS THE PROPERTY OF CURRIE SOWARDS AGUILA ARCHITECTS INC. ALL RIGHTS ARE RESERVED. ANY POSSESSION, REPRODUCTION OR OTHER USE OF THIS DOCUMENT, WITHOUT THE WRITTEN CONSENT OF CURRIE SOWARDS AGUILA ARCHITECTS INC., IS PROHIBITED.

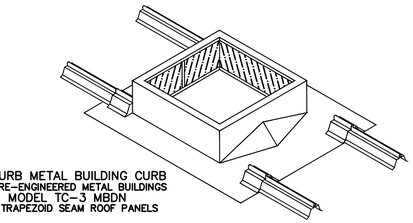

THYCURB METAL BUILDING CURB
FOR PRE-ENGINEERED METAL BUILDINGS
MODEL TC-3 MBDN
FOR TRAPEZOID SEAM ROOF PANELS

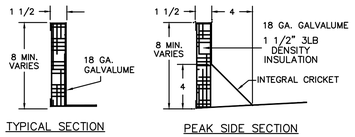

METAL ROOF CURB DETAIL

N.T.S

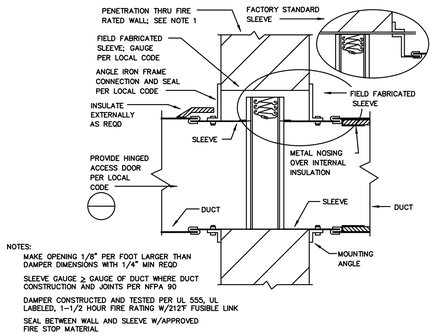

NOTES:
MAKE OPENING 1/8" PER FOOT LARGER THAN DAMPER DIMENSIONS WITH 1/4" MIN REQD
SLEEVE GAUGE ≥ GAUGE OF DUCT WHERE DUCT CONSTRUCTION AND JOINTS PER NFPA 90
DAMPER CONSTRUCTED AND TESTED PER UL 555, UL LABELED, 1-1/2 HOUR FIRE RATING W/212°F FUSIBLE LINK
SEAL BETWEEN WALL AND SLEEVE W/APPROVED FIRE STOP MATERIAL

RUSKIN MODEL DIBD2 STYLE B (RECTANGULAR) CURTAIN TYPE FIRE DAMPER WITH 167°F FUSIBLE LINK.

CURTAIN TYPE FIRE DAMPER DETAIL

NTS

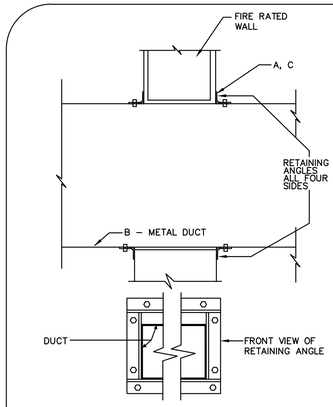

PER 2007 FLORIDA MECHANICAL CODE 607.5.3:

A. STEEL SLEEVE: MIN. OF 12 INCH LONG BY 0.060 INCH THICK STEEL SLEEVE SHALL BE CENTERED IN EACH DUCT OPENING.

B. GALVANIZED STEEL DUCT, MINIMUM 25 GAUGE OR HEAVIER.
- DUCT SHALL NOT EXCEED 100 SQUARE INCHES.
- DUCT SHALL NOT HAVE OPENINGS THAT COMMUNICATE A CORRIDOR WITH ADJACENT SPACES.
- DUCT SHALL BE INSTALLED ABOVE CEILING.
- DUCT SHALL NOT TERMINATE AT A WALL REGISTER IN THE FIRE-RESISTANCE RATED WALL.

C. SECURE SLEEVE TO WALL ON BOTH SIDES OF THE WALL AND ALL FOUR SIDES OF THE SLEEVE WITH:
1. MINIMUM 1 1/2" BY 1 1/2" BY 0.060 INCH STEEL RETAINING ANGLES.
2. THE RETAINING ANGLES SHALL BE SECURED TO THE SLEEVE AND THE WALL WITH NO. 15 (M5) SCREWS, A MINIMUM OF TWO SCREWS PER SIDE OF SLEEVE.
3. THE ANNULAR SPACE BETWEEN THE STEEL SLEEVE AND THE WALL OPENING SHALL BE FILLED WITH ROCK (MINERAL) WOOL BATTING ON ALL SIDES.

FIRE RATED WALL PENETRATION DETAIL W/O DAMPER

N.T.S

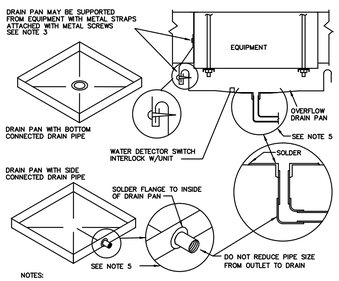

NOTES:
1 CROSS BREAK BOTTOM OF SHEET METAL DRAIN PAN TO PROVIDE SLOPED DRAINAGE TO OUTLET
2 SOLDER OR OTHERWISE SEAL ALL JOINTS TO MAKE DRAIN PAN LEAK TIGHT
3 SUSPEND DRAIN PAN WITH EQUIPMENT SUPPORT RODS WHEN POSSIBLE, OTHERWISE ATTACH WITH STRAPS TO EQUIPMENT
4 FABRICATE DRAIN PAN FROM 24 GA GALV SHEET METAL
5 ROUTE DRAIN TO CODE APPROVED CONSPICUOUS LOCATION AND PIPE SEPERATELY FROM CONDENSATE DRAIN PIPE

CONDENSATE DRAIN OVERFLOW PAN DETAIL

NTS

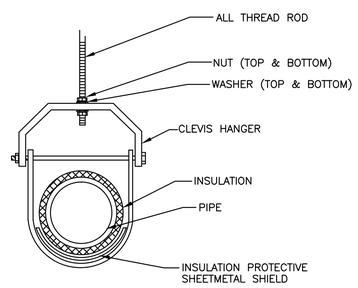

TYPICAL CLEVIS HANGER DETAIL

N.T.S

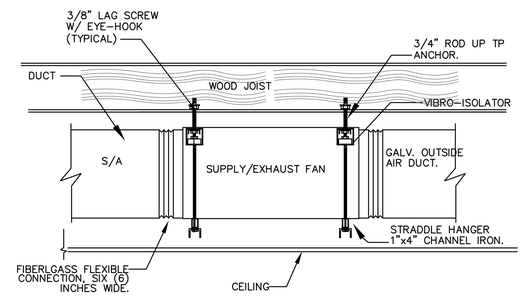

NOTE:
STRUCTURAL SUPPORT DETAILS BY STRUCTURAL ENGINEER.
SEE DETAIL FOR SECONDARY DRAIN PAN.

SUPPLY/EXHAUST FAN HANGING DETAIL

N.T.S

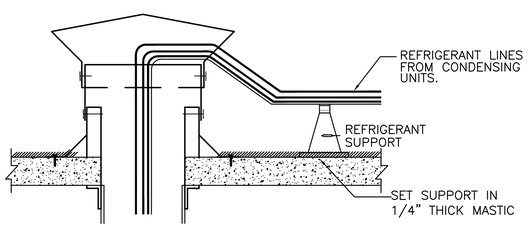

REF. PIPE SUPPORT
MIRO INDUSTRIES, MODEL 1.5

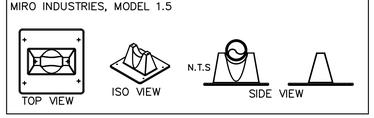

REFRIGERANT PIPE SUPPORT DETAIL

N.T.S

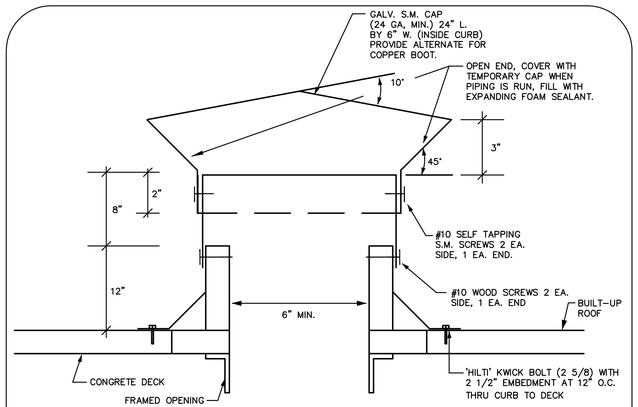

REFRIGERANT PIPE BOOT DETAIL

N.T.S

MDET-J13

MECHANICAL DETAILS

N.T.S.

THIS DOCUMENT IS THE PROPERTY OF CURRIE SOWARDS AGUILA ARCHITECTS INC. ALL RIGHTS ARE RESERVED. ANY POSSESSION, REPRODUCTION OR OTHER USE OF THIS DOCUMENT, WITHOUT THE WRITTEN CONSENT OF CURRIE SOWARDS AGUILA ARCHITECTS INC., IS PROHIBITED.

CURRIE SOWARDS AGUILA ARCHITECTS
Architects, Planners & Interior Designers
AA26001584
134 N.E. 1st Avenue
Delray Beach, Florida 33444
TEL: 561 276-4951
FAX: 561 243-8184
E-mail: office@csa-architects.com

ISSUED FOR : DRC 11.29.2011
AAC 01.18.2012
AAC (RESUBMITTAL) 03.21.2012
P&Z 05.01.2012
BIDS 08.06.2012

PERMIT 08.06.2012

CONSTRUCTION

SEAL
DANIEL E. THOMPSON LICENSE NO. 33289 STATE OF FLORIDA PROFESSIONAL ENGINEER

PROJECT TITLE
CITY OF POMPANO BEACH FIRE STATION 103

3721 N.E. 12th Avenue
POMPANO BEACH, FL 33064

REVISIONS

THESE DRAWINGS ARE PREPARED PER ESTABLISHED INDUSTRY STANDARDS AND REPRESENT THE ARCHITECT AND ENGINEERS DESIGN CONCEPT. THEY ARE NOT INTENDED TO PROVIDE EVERY DETAIL OR CONDITION REQUIRED TO CONSTRUCT THE BUILDING. THE CONTRACTOR THROUGH SUBMITTALS AND OTHER COORDINATION EFFORTS IS FULLY RESPONSIBLE FOR PROVIDING A COMPLETE AND OPERATIONAL BUILDING WHETHER INDICATED ON THE PLANS OR NOT.

FILE NUMBER 11127-M-2.4.DWG

DRAWING TITLE
MECHANICAL DETAILS

08.06.2012 BID-PERMIT SET

TYEC HVAC PLUMBING ELECTRICAL
THOMPSON & YOUNGROSS ENGINEERING CONSULTANTS, LLC
TO THE BEST OF MY KNOWLEDGE THE PLANS AND SPECIFICATIONS COMPLY WITH THE MINIMUM APPLICABLE BUILDING CODE.
DANIEL E. THOMPSON FLA. REG. NO. 33289
ANDREW J. YOUNGROSS FLA. REG. NO. 51758
CERTIFICATE of AUTHORIZATION NO. 25996
112 S.E. 10th STREET DELRAY BEACH, FL. 33483 E-MAIL: tec@tecfla.com
TEL: 561-274-0200 FAX: 561-274-0222 www.tecfla.com

DATE 08.06.2012 | DRAWN BY MB

JOB NUMBER 110102 / 11127

DRAWING NUMBER
M-2.4