20 HP SYSTEM

Presented To:

City of Pompano Beach
301 N.E. 12th Street
Pompano Beach, FL 33060

Prepared By:
Robert Geiger

10650 Nw South River Dr
Medley, FL 33178
Direct:
Fax:
Cell Phone:

Prepared On: 6/21/2012

This proposal is valid until 7/21/2012. After that date the quote and terms in the proposal may need to be revised.

Rotary Screw Air Compressor
UP6-20

Image for reference only

Technical Information:

Capacity:

- 83 cfm @ 125 psig (UP6-20-125)
- 125 psig (UP6-20-125)

Weight:

1183 lbs. 1408 lbs. Baseplate

Connection Size: 1" NPT

Dimensions (L x W x H):

- 52" x 36" x 42.5" Baseplate

Product Description:

The design of the Ingersoll Rand Rotary screw air compressor combines a high efficiency integrated compression module, simple diagnostics, quiet operation and a compact footprint. Options include integrated air treatment and advanced controls.

These features deliver unparalleled reliability, ease of operation and flexibility in placement and application. The addition of the integrated dryer increases the life and enhances performance of down stream tools and equipment.

Key Features & Benefits:

- 230-460V ODP Motor / FV Starter
- Load /No Load with Auto Start/ Stop Controls
- Low Sound Enclosure (68 dba)
- Ultra Coolant

Visit the Ingersoll Rand website for further information http://www.ingersollrandproducts.com

All specifications are given for informational purposes only. All information is subject to change without notice.
The attached terms and conditions are an integral part of this quotation and any resulting orders.

NOTES:

1. APPROXIMATE STANDARD PACKAGE WEIGHTS: 20 HP - 538 Kg (1186 lbs.)
   25 HP - 547 Kg (1206 lbs.)
   30 HP - 586 Kg (1292 lbs.)
   APPROXIMATE DRYER PACKAGE WEIGHTS: 20 HP - 640 Kg (1411 lbs.)
   25 HP - 658 Kg (1451 lbs.)
   30 HP - 697 Kg (1537 lbs.)
2. COOLANT (LUBRICANT) FILL QUANTITY (APPROXIMATE) 13 LITERS (3.4 GALLONS)
3. RECOMMENDED CLEARANCE IN FRONT OF CONTROL PANEL DOOR 1067mm (42 inches) OR MINIMUM AS REQUIRED BY THE LATEST NATIONAL ELECTRICAL CODES OR APPLICABLE LOCAL CODES.
4. RECOMMENDED CLEARANCES ON TWO SIDES (LEFT AND RIGHT SIDE) 914mm (36 inches).
5. MINIMUM RECOMMENDED CLEARANCE FOR THE REAR OF THE COMPRESSOR IS TO BE 152mm (6 inches).
6. MINIMUM RECOMMENDED COMPRESSOR TOP CLEARANCE FOR PACKAGE EXHAUST TO BE 914 mm (36 INCHES).
7. EXTERNAL PIPING SHALL NOT EXERT ANY UNRESOLVED MOMENTS OR FORCES ON THE UNIT. USE PIPE SIZE AS LARGE OR LARGER AT DISCHARGE CONNECTION.
8. THERE SHOULD BE NO PLASTIC OR PVC PIPING ATTACHED TO THIS UNIT OR USED FOR ANY LINES DOWN STREAM.
9. FORKLIFT HOLE COVERS MUST BE INSTALLED AFTER UNIT IS IN PLACE TO REDUCE NOISE AND INSURE PROPER COOLING OF PACKAGE.
10. ANY FIELD INSTALLED DUCTING TO AND FROM THE COMPRESSOR CANNOT ADD MORE THAN 12.7mm (.50 INCHES) OF WATER TOTAL AIR RESISTANCE.
11. DO NOT PIPE INTO A COMMON HEADER WITH A RECIPROCATING COMPRESSOR, UNLESS THE RECIPROCATING COMPRESSOR UTILIZES A DISCHARGE PULSATION DAMPENER.
12. SIZING OF ELECTRICAL COMPONENTS NOT SUPPLIED BY INGERSOLL-RAND IS THE RESPONSIBILITY OF THE CUSTOMER AND SHOULD BE DONE IN ACCORDANCE WITH THE INFORMATION ON THE COMPRESSOR DATA PLATE AND NATIONAL AND LOCAL ELECTRICAL CODES.

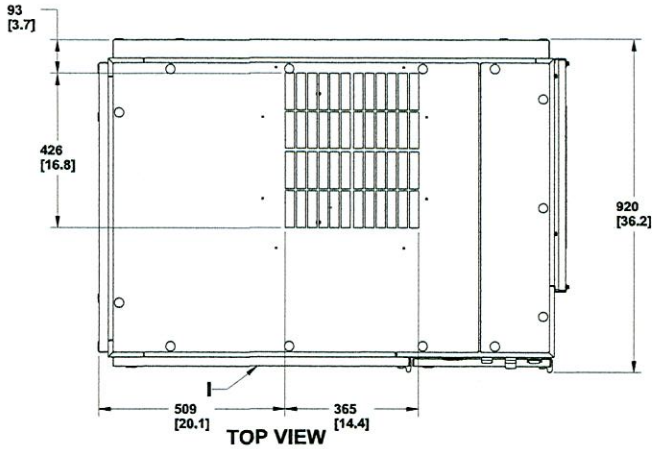

TOP VIEW

REVISIONS

ZONE	REV	ECN	DESCRIPTION	DATE	DWN	APV
	A	01R00542	ORIGINAL RELEASE	2001OCT23	J.HUNT	J.MARSHALL G.PATTERSO
	B	02R00099	ADDED DRYER UNIT INFORMATION	2002FEB22	J.HUNT	M.STICKLAN
SHT4	C	03R00548	ADDED OUTDOOR MODIFICATION ILLUSTRATION	2003MAY16	J.HUNT	M.STICKLAN
2C-3	D	76842	NOTE 10: 12.7MM (0.5 INCHES) WAS 6MM (.25 INCHES) UPDATED FORMAT	2007NOV12	S.DIETRICH	C.FRAZIER
1C8 1C5 2B4	E	76686	UPDATED NOTE 10 PER ECN 76842: 12.7mm (0.50 INCHES) WAS 6mm (.25 INCHES) MOVED NOTES TO PAGE 1 FROM PAGE 2. ADD MISSING LEADER FOR KEY "H" DETAIL Z WAS DETAIL H	2007NOV20	W.SORAH	C.FRAZIER
1B8 3B5 3C5	F	78011	KEY: REMOVED "P", "P" WAS "Q", "Q" WAS "R" DIM 203 WAS 87 DIM 598 WAS 215 DIM 317 WAS 235 REMOVED FILTER RESTRICTION INDICATOR "P"	2009JUN30	W.SORAH	C.FRAZIER
3B6 3C3	G	78103	CHG. DRYER AIR FLOW - INLET WAS EXHAUST, EXHAUST WAS INLET	2009SEP08	M.CAIN	C.FRAZIER

KEY

A	PRE FILTER
B	COMPRESSOR AIR INTAKE
C	STARTER BOX (NON COMBINATION STARTER)
D	COOLING AIR EXHAUST
E	1.00 INCH NPT AIR DISCHARGE
F	CUSTOMER POWER INLET
G	FORK LIFT OPENINGS (SEE NOTE 9)
H	EMERGENCY STOP BUTTON
I	PRIMARY COMPRESSOR SERVICE DOOR
J	.25 INCH FEMALE NPT MOISTURE SEPARATOR DRAIN
K	.25 INCH FEMALE NPT DRYER DRAIN
L	.25 INCH FEMALE NPT AIR FILTER DRAIN
M	1.00 INCH NPT PLUG
N	DRYER AIR INLET
O	DRYER AIR EXHAUST
P	DRYER ON/OFF SWITCH
Q	DEW POINT INDICATOR

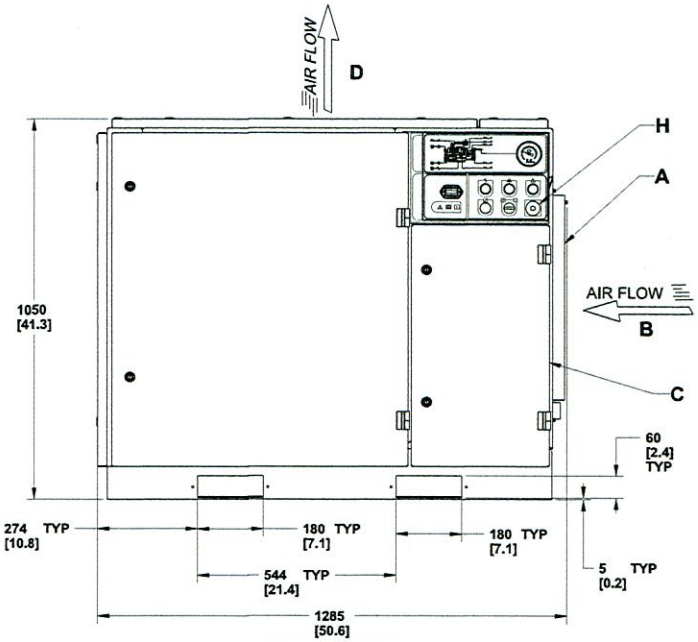

FRONT VIEW

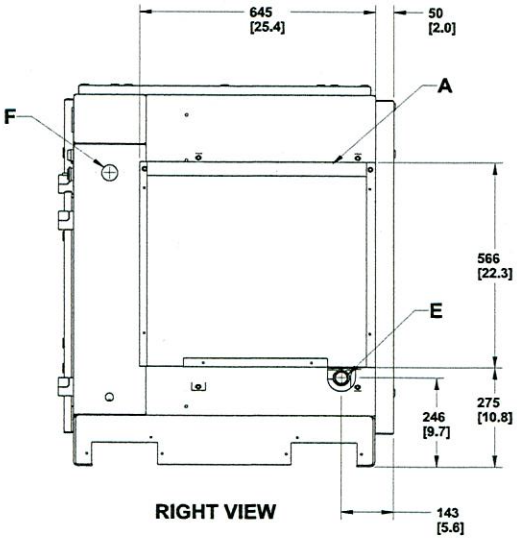

RIGHT VIEW

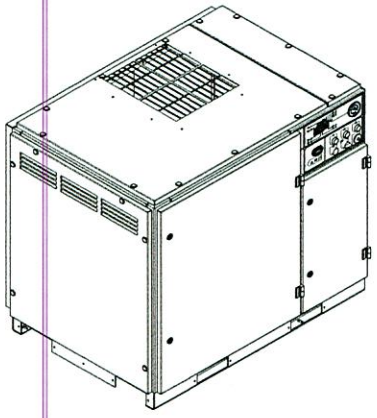

ISOMETRIC VIEW

GENERAL ARRANGEMENT TOLERANCES	WARNING: THE EXPORT OR REEXPORT OF THIS DRAWING OR A PRODUCT PRODUCED BY THIS DRAWING IS SUBJECT TO U.S. EXPORT ADMINISTRATION REGULATIONS AND OTHER APPLICABLE GOVERNMENT RESTRICTIONS OR REGULATIONS.	DO NOT SCALE DRAWING		Ingersoll Rand
ALL DIMENSIONS ARE IN MILLIMETERS [INCHES (IF SHOWN)]	PROPRIETARY NOTICE	DRAWING CONFORMS TO ASME Y14.5M - 1994	THIRD ANGLE PROJECTION	
UNSPECIFIED TOLERANCES: WHOLE : ±13.0[.50] .X : ±6.0[.25] ANGLES : ±1°	THIS DRAWING CONTAINS CONFIDENTIAL AND TRADE SECRET INFORMATION. IS THE PROPERTY OF INGERSOLL-RAND CO., AND IS GIVEN TO THE RECEIVER IN CONFIDENCE. THE RECEIVER BY RECEPTION AND RETENTION OF THE DRAWING ACCEPTS THE DRAWING IN CONFIDENCE AND AGREES THAT, EXCEPT AS AUTHORIZED IN WRITING BY INGERSOLL-RAND CO. IT WILL (1) NOT USE THE DRAWING OR ANY COPY THEREOF OR THE CONFIDENTIAL OR TRADE SECRET INFORMATION THEREIN; (2) NOT COPY THE DRAWING; (3) NOT DISCLOSE TO OTHERS EITHER THE DRAWING OR THE CONFIDENTIAL OR TRADE SECRET INFORMATION THEREIN; AND (4) UPON COMPLETION OF THE NEED TO RETAIN THE DRAWING, OR UPON DEMAND, RETURN THE DRAWING, ALL COPIES THEREOF, AND ALL MATERIAL COPIED THEREFROM.	CAD GENERATED DRAWING, NO MANUAL REVISIONS ALLOWED	DRAWN J.HUNT DATE 2001OCT23	GENERAL ARRANGEMENT BASE MOUNTED 60 HERTZ
		UNLESS OTHERWISE SPECIFIED: - REMOVE ALL BURRS AND SHARP CORNERS - WELD SYMBOLS TO BE IN ACCORDANCE WITH ANSI/AWS A2.4	CHECKED G.HALLMAN DATE 2001OCT24	
Ingersoll-Rand Industrial Technologies		COPYRIGHT © 2009 INGERSOLL-RAND COMPANY ALL RIGHTS RESERVED	APPROVED S.SHARP M.STICKLAN DATE 2001OCT24 2001OCT24	SIZE A1 ESTIMATED WEIGHT (KG UNLESS OTHERWISE SPECIFIED) 0.0 DWG NO. 22063333 REV G
				SCALE 0.15 UNIT PEGASUS 15-30HP SHEET 1 OF 4

UNLESS OTHERWISE SPECIFIED PRINTED DOCUMENT IS UNCONTROLLED

06-Sep-2006 10:29:36 (model:G,D=G,D=)

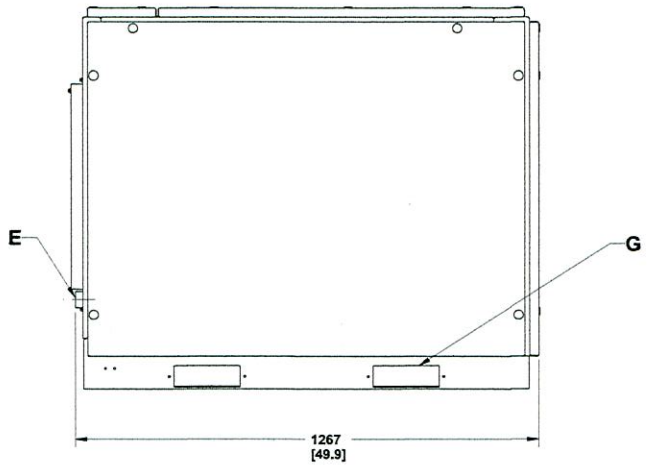

REAR VIEW

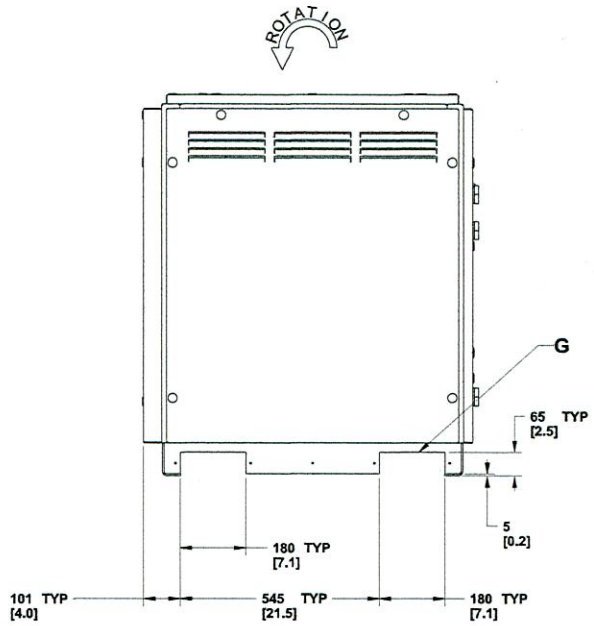

LEFT VIEW

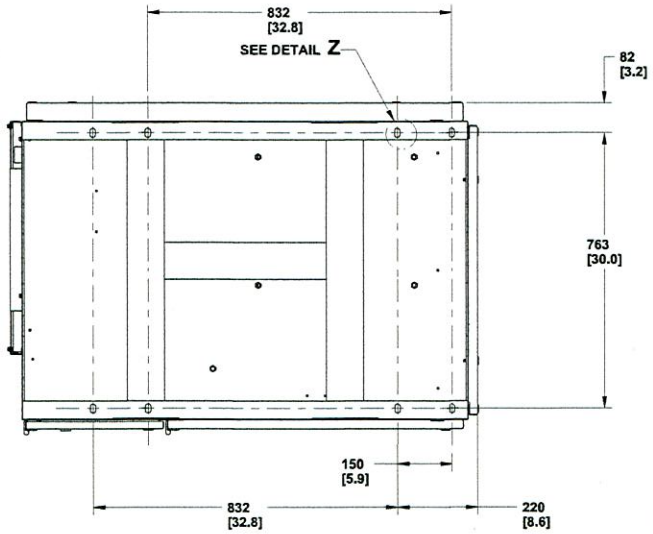

BOTTOM VIEW

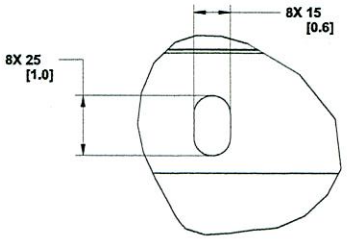

DETAIL Z
SCALE 1.000

APPROVED FOR :	
I-R ORDER NO. :	
CUSTOMER :	
CUSTOMER ORDER NO :	
PER :	
DATE :	

MODEL :	JOB :	SPEC :
SPEED :	ITEM :	CONTRACTOR :
DISCHARGE PRESSURE RATING :	ARCH. ENGR :	
ACTUAL DELIVERY :	MOTOR POWER :	MOTOR ENCL :
STARTER TYPE :	MOTOR VOLTS :	PHASE : Hz :

PROPRIETARY NOTICE
THIS DRAWING CONTAINS CONFIDENTIAL AND TRADE SECRET INFORMATION. (1) IT IS THE PROPERTY OF I-R ENERGY SYSTEMS AND IS LENT TO THE RECEIVER IN CONFIDENCE. THE RECEIVER BY RECEIPTION AND RETENTION OF THIS DRAWING ACCEPTS THE DRAWING IN CONFIDENCE AND AGREES THAT RECEIVER HAS AUTHORIZED (1) IN WRITING BY INDEXTOLL-PAINT CO. ETABLIS (A) TO USE THE DRAWING (2) NOT TO DISCLOSE TO OTHERS EITHER THE CONFIDENTIAL OR TRADE SECRET INFORMATION THEREIN (3) NOT COPY THE DRAWING (4) NOT DISCLOSE TO OTHERS EITHER THE DRAWING OR THE COMPENSATION OR TRADESECRET INFORMATION THEREIN, AND (5) UPON COMPLETION OF THE NEED TO RETURN THE DRAWING TO I-R ENERGY SYSTEMS, ALL DRAWINGS AND COPIES THEREOF, AND ALL MATERIAL COPIED THEREFROM.

TITLE: GENERAL ARRANGEMENT
BASE MOUNTED 60 HERTZ

SIZE	DWG NO.	REV
A1	22063333	G
SCALE: 0.15		SHEET 2 OF 4

UNLESS OTHERWISE SPECIFIED PRINTED DOCUMENT IS UNCONTROLLED