Florida's Warmest Welcome

BID/CONTRACT DOCUMENTS

STREET LIGHT REPLACEMENT AND UNDERGROUND ELECTRICAL REPAIR

BID T-08-14

For the City of Pompano Beach, Florida

BID OPENING: January 8, 2014, 2:00 p.m. (local)
PURCHASING DIVISION
1190 N.E. 3RD AVENUE, BUILDING C (FRONT)
POMPANO BEACH, FLORIDA 33060

TABLE OF CONTENTS

INVITATION TO BID **2**
INSTRUCTIONS TO BIDDERS **3**
BID PROPOSAL **13**
DRUG-FREE WORKPLACE **24**
BID BOND **25**
AGREEMENT **27**
ACKNOWLEDGMENT OF CONTRACTOR, IF AN INDIVIDUAL **34**
ACKNOWLEDGMENT OF CONTRACTOR, IF A PARTNERSHIP **35**
ACKNOWLEDGMENT OF CONTRACTOR, IF A CORPORATION **36**
General Conditions of the Contract **37**
SUPPLEMENTARY CONDITIONS **67**
SPECIFICATIONS **68**
STREET LIGHT FIXTURE SPECIFICATIONS **73**

INVITATION TO BID

Sealed Proposals for Bid T-08-14, Street Light Replacement and Repair addressed to the City of Pompano Beach, Purchasing Office, 1190 N.E. 3rd Avenue, Building C (front) Pompano Beach, Florida 33060, will be received until **2:00 p.m. (local), on January 8, 2014** and will be publicly opened and read aloud. Any bids received after the time and date will not be considered.

The project consists of furnishing all labor, equipment, tools, materials and all other incidentals required for the installation and repair of aluminum street light poles, and underground electrical breaks (pole and repair locations listed in attachment "A"). All poles must be aluminum and must be FDOT wind load rating approved. The poles must have a break-away base and break-away fuse holder. Successful bidder will be responsible for MOT at each location. All bidders are expected to visit the site of the work and to inform themselves as to all existing conditions and obtain necessary measurements before submitting the Bid. Failure to do so in no way relieves the successful bidder from the necessity of furnishing all equipment and materials and performing all work required for the completion of the contract in conformity with all specifications. Technical product specifications for the aluminum pole, base, pole arm, and light fixture are located at the end of this document. All work must be inspected and approved by the City's Electrician prior to releasing payment.

Bid documents, and attachment "A" may be obtained at no charge from the City of Pompano Beach website www.pompanobeachfl.gov.

Each proposal must be submitted on the prescribed form and accompanied by a certified check or bid bond executed on the prescribed form, payable to the City of Pompano Beach, Florida, in an amount not less than 5 percent (5%) of the amount bid. The bid form must be filled in completely and accurately, particularly as it pertains to alternate bid items.

All bid bonds, contract bonds, insurance contracts and certificates of insurance shall be either executed by or countersigned by a licensed resident agent of the surety or insurance company having his place of business in the State of Florida, and in all ways complying with the insurance laws of the State of Florida. Further, the said surety or insurance company shall be duly licensed and qualified to do business in the State of Florida. **Insurance is required for all bids.**

In order to perform public work, the successful Bidder shall, as applicable, hold or obtain such Contractor' and Business Licenses as required by State Statutes.

Before a Contract will be awarded for the work contemplated herein, the OWNER will conduct such investigation as is necessary to determine the performance record and ability of the apparent low Bidder to perform the size and type of Work specified under the Contract Documents, and to postpone the award of the Contract for a period of time which, however, shall not exceed 90 Days from the bid opening date.

Dated this 3rd day of December, 2013

CITY OF POMPANO BEACH

By: Otis J. Thomas, Interim General Services Director

INSTRUCTIONS TO BIDDERS

1. DEFINED TERMS

Terms used in these Instructions to Bidders, which are defined in the Standard GENERAL CONDITIONS of the Construction Contract, have the meanings assigned to them in the GENERAL CONDITIONS. The term "Bidder" means one who submits a Bid directly to OWNER, as distinct from a sub-bidder, who submits a bid to a Bidder. The term "Successful Bidder" means the lowest, qualified, responsible and responsive Bidder to whom OWNER (on the basis of OWNER'S evaluation as hereinafter provided) makes an award. The term "Bidding Documents" includes the Invitation to Bid, Instructions to Bidders, the Bid Proposal, and the proposed Contract Documents (including all Addenda issued prior to receipt of Bids).

2. COPIES OF BIDDING DOCUMENTS

2.1 Complete sets of the Bidding Documents may be obtained from the City of Pompano Beach website at no charge.

2.2 Complete sets of Bidding Documents must be used in preparing Bids; the OWNER assumes no responsibility for errors or misinterpretations resulting from the use of incomplete sets of Bidding Documents.

2.3 OWNER, in making copies of Bidding Documents available on the above terms, does so only for the purpose of obtaining Bids on the Work and does not confer a license or grant for any other use.

3. QUALIFICATIONS OF BIDDERS

To demonstrate qualifications to perform the Work, and to be considered for award, each Bidder must submit written evidence, such as previous experience, present commitments and other such data as may be called for in this document.

4. PUBLIC ENTITY CRIMES

In accordance with Florida State Statute 287.133 (2)(a): A person or affiliate who has been placed on the convicted vendor list following a conviction for a public entity crime may not submit a bid on a contract to provide any goods or services to a public entity, may not submit a bid on a contract with a public entity for the construction or repair of a public building or public work, may not submit bids on leases of real property to a public entity, may not be awarded or perform work as a contractor, supplier, subcontractor or consultant under a contract with any public entity, and may not transact business with any public entity in excess of the threshold amount provided s. 287.017 for CATEGORY TWO for a period of 36 months from the date of being placed on the convicted vendor list.

5. DRUG FREE WORKPLACE

In accordance with Section 287.087, State of Florida Statutes, preference shall be given to businesses with Drug-free Workplace Programs. Bidder should complete and provide Statement Under Section 287.087 Florida Statutes on Drug-Free Workplace.

6. ANTI-KICKBACK ACT

The successful bidder must comply with the Copeland "Anti-Kickback Act" (19 U.S.C. Section 874), as supplemented in U.S. Department of Labor Regulations (29 CFR, Part 3).

7. EXAMINATION OF CONTRACT DOCUMENTS AND SITES

7.1 It is the responsibility of each Bidder before submitting a Bid, to (a) examine the Contract Documents thoroughly, (b) visit the site to become familiar with local conditions that may affect costs, progress, performance or furnishing of the Work, (c) consider federal, state and local Laws and Regulations that may affect cost, progress, performance or furnishing of the Work, (d) study and carefully correlate Bidder's observations with the Contract Documents, and (e) notify OWNER of all conflicts, errors or discrepancies in the Contract Documents.

7.2 Information and data reflected in the Contract Documents with respect to or contiguous to the site is based upon information and data furnished to OWNER by owners of such facilities or others, and OWNER does not assume responsibility for accuracy or completeness thereof unless it is expressly provided otherwise.

7.3 Provisions concerning responsibilities for the adequacy of data furnished to prospective Bidders on subsurface conditions, Underground Facilities and other physical conditions, and possible changes in the Contract Documents due to differing conditions appear in the General Conditions.

7.4 Before submitting a Bid, each Bidder will, at Bidder's own expense, make or obtain any additional examinations, investigations, explorations, tests and studies and obtain any additional information and data which pertain to the physical conditions (surface, subsurface and Underground Facilities) at or contiguous to the site or otherwise which may affect cost, progress, performance or furnishing of the Work and which Bidder deems necessary to determine its Bid for performing and furnishing the work in accordance with the time, price and other terms and conditions of the Contract Documents.

7.5 On request in advance, OWNER will provide each Bidder access to the site to conduct such explorations and tests as each Bidder deems necessary for submission of a Bid. Bidder shall fill all holes, clean up and restore the site to its former condition, or better, upon completion of such explorations.

7.6 The lands upon which the Work is to be performed, rights-of-way and easements for access thereto and other lands designated for use by CONTRACTOR in performing the Work are identified in the Contract Documents. All additional lands and access thereto required for temporary construction facilities or storage of materials and equipment are to be provided by CONTRACTOR. Easements for permanent structures or permanent changes in existing structures are to be obtained and paid for by OWNER unless otherwise provided in the Contract Documents.

7.7 The submission of a Bid will constitute an incontrovertible representation by Bidder that Bidder has complied with every requirement of this section and the General Conditions, that without exception the Bid is premised upon performing and furnishing the Work required by the Contract Documents and such means, methods, techniques, sequences or procedures of construction as may be indicated in or required by the Contract Documents, and that the Contract Documents are sufficient in scope and detail to indicate and convey understanding of all terms and conditions for performance and furnishing of the Work.

8. INTERPRETATIONS AND ADDENDA

8.1 All questions are to be submitted in writing to the Purchasing Office, 1190 N.E. 3rd Avenue, Building C (Front), Pompano Beach, Florida 33060; questions may be submitted by fax to (954) 786-4168, or by email to purchasing@copbfl.com. All questions must include the inquiring firm's name, address, telephone number, fax number, and bid name and number.

All written questions must be received by **5:00 p.m. on December 30, 2013** at the above location. No further questions will be accepted after this date. Oral and other interpretations or clarifications will be without legal effect. Questions may be faxed to (954) 786-4168, referencing the bid number on all pages faxed.

8.2 Addenda may also be issued to modify the Bidding Documents as deemed advisable by the OWNER.

9. BID SECURITY

9.1 Each Bid must be accompanied by Bid security made payable to OWNER in an amount of five percent of the Bidder's maximum Bid price and in the form of a certified or bank check or a Bid Bond issued by a surety meeting the requirements stated herein.

9.2 The Bid security of the Successful Bidder will be retained until such Bidder has executed the Agreement and furnished the required contract security, (if provided as a cashier's check or bank officer's check), whereupon the Bid security will be returned. If the Successful Bidder fails to execute and deliver the Agreement and furnish the required contract security within 10 days after the Notice of Award, OWNER may annul the Notice of Award and the Bid security of that Bidder will be forfeited. The Bid security of other Bidders whom OWNER believes to have reasonable chance of receiving the award may be retained by OWNER until a completed contract has been issued, whereupon Bid security furnished by such Bidders will be returned.

9.3 The Bid Bond, if provided, shall be issued by a Company having a registered agent in the State of Florida. This check or bond shall be retained by the payee as liquidated damages should the bidder refuse or fail to enter into a contract with the payee for the execution of the work embraced in the proposal, in the event the proposal of the bidder is accepted.

10. CONTRACT TIME

The number of days within which, or the dates by which, the Work is to be substantially completed and also completed and ready for final payment (the Contract Time) are set forth in the section entitled Bid Proposal.

11. LIQUIDATED DAMAGES

11.1 Provisions for liquidated damages, if any, are set forth in the Agreement.

11.2 All bidders must state in the Bid Proposal the amount of consideration required by the Bidder in return for the Bidder's promise of indemnity contained in the General Conditions. The amount to be stated shall be no less than $10.00.

12. SUBSTITUTE OR "OR-EQUAL" ITEMS

The Contract, if awarded, will be on the basis of materials and equipment described in the Drawings or specified in the Specifications without consideration of possible substitute or "or-equal" items. Whenever it is indicated in the Drawings or specified in the Specifications that a substitute or "or-equal" item of material or equipment may be furnished or used by Contractor if acceptable to OWNER, application for such acceptance will not be considered by OWNER until after the effective date of the agreement.

13. SUBCONTRACTORS, SUPPLIERS AND OTHERS.

13.1 Each Bid must identify the names and address of Subcontractors, Suppliers and other persons and organizations including those who are to furnish the principal items of material and equipment listed in the Bid Proposal section. If requested, the apparent Successful Bidder, and any other Bidder so requested, shall within seven days after the Bid opening submit to OWNER a list of all such Subcontractors, Suppliers and other persons and organizations proposed for those portions of the Work for which such identification is required. Such list shall be accompanied by an experience statement with pertinent information regarding similar projects and other evidence of qualification for each such Subcontractor, Supplier, other persons or organization, if requested by OWNER. If OWNER after due investigation has reasonable objection to any proposed Subcontractor, Supplier, other person or organization, may before the Notice of Award is given request the apparent Successful Bidder to submit an acceptable substitute without an increase in Bid price. If apparent Successful Bidder declines to make any such substitution, Owner may award the contract to the next lowest Bidder that proposes to use acceptable Subcontractors, Suppliers and other persons and organizations. The declining to make requested substitutions will not constitute grounds for sacrificing the Bid Security of any Bidder. Any Subcontractor, Supplier, other person or organization listed and to whom OWNER does not make written objection prior to the giving of the Notice of Award will be deemed acceptable to OWNER subject to revocation of each acceptance after the Effective Date of Agreement.

13.2 In contracts where the Contract Price is on the basis of Cost-of-the Work Plus a fee, the apparent Successful Bidder, prior to the Notice Award, shall identify in writing to OWNER those portions of the Work that such Bidder proposes to subcontract and after the Notice of Award may only subcontract other portions of the Work with OWNER'S written consent.

13.3 No CONTRACTOR shall be required to employ any Subcontractor, Supplier, other person or organization against who CONTRACTOR has reasonable objection.

14. BID PROPOSAL

14.1 The Bid Proposal is included with the Bidding Documents.

14.2 All blanks on the Bid Proposal are to be completed in ink or by typewriter. The City requests three (3) copies of the bid be submitted, (one original, and two copies). Bidders are to complete and return pages 13-26.

14.3 Bids by corporations must be executed in the corporate name by the president or a vice-president (or other corporate officer accompanied by evidence of authority to sign) and the corporate seal must be affixed and attested by the secretary or an assistant secretary. The corporate address and state of incorporation must be shown below the signature.

14.4 Bids by partnerships must be executed in the partnership name and signed by a partner, whose title must appear under the signature and the official address of the partnership must be shown below the signature.

14.5 All names must be typed or printed below the signature.

14.6 The Bid should contain an acknowledgment of receipt of all Addenda (the numbers of which should be filled in on the Bid Proposal).

14.7 The address and telephone number for communications regarding the Bid must be shown.

14.8 All blank spaces in the bid form must be filled in, both words and figures where required. In case of discrepancy between unit prices and totals, unit prices will prevail.

15. SUBMISSION OF BIDS

15.1 Bids shall be submitted before the time and at the place indicated in the Invitation to Bid and shall be submitted in an opaque sealed envelope. The envelope shall be marked on the exterior with the Project title, City Bid Number, the name and address of the Bidder, and addressed to:

Otis J. Thomas, Interim General Services Director
City of Pompano Beach, Florida
1190 N.E. 3rd Avenue, Bldg. C (front)
Pompano Beach, Florida 33060

The Bid shall be accompanied by the Bid Security and other required documents. If not mailed, please deliver to the Purchasing Office, 1190 N.E. 3rd Avenue, Building C (front), Pompano Beach, Florida, 33060.

15.2 More than one Bid received for the same work from an individual, firm or partnership, Corporation or Association under the same or different names will not be considered. Reasonable grounds for believing that any Bidder is interested in more than one Bid for the same work will cause the rejection of all such Bids in which the Bidder is interested. If there are reasonable grounds for believing that collusion exists among the Bidders, the Bids of participants in such collusion will not be considered.

15.3 If you wish to receive a copy of the bid tabulation sheet after opening, please submit a stamped, self-addressed envelope with your bid. Bid results ***will not*** be read to you over the phone. Bid tabulations are also posted on the City's website.

16. MODIFICATION AND WITHDRAWAL OF BIDS

16.1 Bids may be modified or withdrawn by an appropriate document duly executed (in the manner that a Bid must be executed) and delivered to the place where Bids are to be submitted at any time prior to the opening of Bids.

16.2 After bids are opened, and a contractor defaults on a City contract, the contractor may be banned from doing business with the City for a period of 36 months from the date of default.

17. OPENING OF BIDS

Bids will be opened and (unless obviously non-responsive) read aloud publicly. An abstract of the amounts of the base Bids and major alternates (if any) will be made available to Bidders after the opening of Bids.

18. BIDS TO REMAIN SUBJECT TO ACCEPTANCE

18.1 All bids will remain subject to acceptance for ninety (90) days after the day of the Bid opening, but OWNER may, in its sole discretion, release any Bid and return the Bid Security prior to that date.

18.2 Extensions of time when Bids shall remain open beyond the ninety (90) day period may be made only by mutual agreement between OWNER, the Successful Bidder, and the surety, if any, for the Successful Bidder.

19. AWARD OF CONTRACT

19.1 OWNER reserves the right to reject any and all Bids, to waive any and all informalities not involving price, time and changes in the Work and to negotiate contract terms with the Successful Bidder, and the right to disregard all nonconforming nonresponsive, unbalanced or conditional Bids. Also, OWNER reserves the right to reject the Bid of any Bidder if OWNER believes that it would not be in the best interest of the Project to make an award to that Bidder, whether because the Bid is not responsible or the Bidder is unqualified or of doubtful financial ability or fails to meet any other pertinent standard or criteria established by OWNER. Discrepancies in the multiplication of units of Work and unit prices will be resolved in favor of the unit prices. Discrepancies between the indicated sum of any column of figures and the correct sum therefor will be resolved in favor of the correct sum.

19.2 In evaluating Bids, OWNER will consider the qualifications of the Bidders, whether or not the Bids comply with the prescribed requirements, and such alternates, unit prices and other data, as may be requested in the Bid form or prior to the Notice of Award.

19.3 OWNER may consider the qualifications and experience of Subcontractors, Suppliers, and other persons and organizations proposed for those portions of the Work as to which the identity of Subcontractor, Suppliers, and other persons and organizations must be submitted as provided in the Supplementary Conditions. OWNER also may consider the operating costs, maintenance requirements, performance data and guarantees of major items of materials and equipment proposed for incorporation in the Work when such data is required to be submitted prior to the Notice of Award.

19.4 OWNER may conduct such investigations as OWNER deems necessary to assist in the evaluation of any Bid and to establish the responsibility, qualifications and financial ability of Bidders, proposed Subcontractors, Suppliers and other persons and organizations to perform and furnish the Work in accordance with the Contract Documents to OWNER'S satisfaction within the prescribed time.

19.5 If the contract is to be awarded, it will be awarded to the lowest Bidder whose evaluation by OWNER indicates to OWNER that the award will be in the best interests of the Project.

19.6 If the contract is to be awarded, OWNER will give the Successful Bidder a Notice of Award within ninety (90) after the day of the Bid opening.

20. CONTRACT SECURITY

When the Successful Bidder delivers the executed Agreement to OWNER, it must be accompanied by the required Performance and Payment Bonds.

21. SIGNING OF AGREEMENT

When OWNER gives a Notice of Award to the Successful Bidder, it will be accompanied by the required number of unsigned counterparts of the Agreement with all other written Contract Documents attached. Within ten (10) days thereafter, CONTRACTOR shall sign and deliver the required number of counterparts of the Agreement and attached documents to OWNER with the required Bonds. Within fifteen (15) days thereafter OWNER shall deliver one fully signed counterpart to CONTRACTOR. Each counterpart is to be accompanied by a complete set of the Drawings with appropriate identification.

22. TAXES

The CONTRACTOR shall pay all applicable sales, consumer, use and other similar taxes required by law. The CONTRACTOR is responsible for reviewing the pertinent state statutes involving the sales tax and complying with all requirements.

23. NOTICE TO CONTRACTOR

The employment of unauthorized aliens by any contractor is considered a violation of Section 274A(e) of the Immigration and Nationality Act. If the Contractor knowingly employs unauthorized aliens, such violation shall be cause for unilateral cancellation of the contract.

24. NON DISCRIMINATION

There shall be no discrimination as to race, color, religion, gender, national origin, ancestry, and physical or mental disability in the operations conducted under this contract. Included as applicable activities by the contractor under this section are the solicitation for, or purchase of, goods or services, or the subcontracting of work in performance of this contract.

25. OCCUPATIONAL HEALTH AND SAFETY

In compliance with Chapter 442, Florida Statues, any items included in the latest edition of "Florida Substance List" which are delivered from a contract resulting from this bid must be accompanied by a Material Safety Data Sheet (MSDS). The MSDS must be maintained by the user agency and must include the following information:

(a) The chemical name and the common name of the toxic substance.

(b) The hazards or other risks in the use of toxic substance, including:

1. The potential for fire, explosion, corrosiveness, and reactivity;

2. The known acute and chronic health effects of risks from exposure, including the medical conditions which are generally recognized as being aggravated by exposure to the toxic substance; and

3. The primary routes of entry and symptoms of overexposure.

(c) The proper precautions, handling practices, necessary personal protective equipment, and other safety precautions in the use of or exposure to the toxic substances, including appropriate emergency treatment in case of overexposure.

(d) The emergency procedure for spills, fire disposal, and first aid.

(e) A description in lay terms of the known specific potential health risks posed by the toxic substance intended to alert any person reading this information.

(f) The year and month, if available, that the information was compiled and the name, address, and the emergency telephone number of the manufacturer responsible for preparing the information.

Any questions regarding this requirement should be directed to:

Department of Labor and Employment Security, Division of Safety, 2002 Old St. Augustine Road, Tallahassee, Florida, 32399; telephone: 1-800-367-4378.

ALL TOXIC SUBSTANCES MUST BE LABELED FOR IDENTIFICATION, IN ACCORDANCE WITH O.S.H.A. STANDARDS.

Notice: Federal I.D. Number must be referenced on your invoice for us to process payment. Please note I.D. Number on Bid Response page.

26. PERMITS AND FEES

The Contractor awarded the project which is the scope of this bid document shall be required to obtain and pay for the permits and/or fees indicated on the chart below in the amounts set forth or pursuant to the formula for percent or unit method which is indicated.

Fees cannot be waived and must be collected by the City from the Contractor. Contact the City Department indicated for additional details regarding the required permit and fee.

FEE OR PERMIT	CITY DEPARTMENT	COST (SET FEE OR PERCENT OF PROJECT AMOUNT)
All construction within City right-of-way	Engineering	Waived
All utilities tie-ins to City water, sewers, and drainage	Engineering	Waived
Paving	Engineering	Waived
Fire plan review for new construction, additions and alterations	Building Inspection	See City Code of Ordinances 95.14
Fire alarm and fire sprinkler plan review (new installations)	Fire Plan Review	See City Code of Ordinances 95.14
Fire hydrant flow test	Fire Plan Review	See City Code of Ordinances 95.14
Business Tax Receipt (only if the contractor has a temporary office in the City of Pompano Beach)	Zoning	See City Code of Ordinances
Site plan review	Zoning	See City Code of Ordinances
Rezoning	Zoning	See City Code of Ordinances
Variance	Zoning	See City Code of Ordinances
Tree Permit application fee	Zoning	See Zoning Code/City Code of Ordinances
Landscape reinspection fee	Zoning	See Zoning Code/City Code of Ordinances
Capital recovery fees	Customer Service	See City Code of Ordinances 50.13 and 51.11
Tapping fee	Customer Service	See City Code of Ordinances
Deposits (water bill)	Customer Service	Deposit based upon size of meter (only applies if contractor responsible for water bills during period between meter installation and City acceptance of project.)
Administrative fee	Customer Service	See City Code of Ordinances
Building permit	Building Inspection	See Bldg Fee Schedule/City Code of Ordinances
Building Reinspection fee	Building Inspection	See Bldg Fee Schedule/City Code of Ordinances
Certificate of occupancy	Building Inspection	See Bldg Fee Schedule/City Code of Ordinances
Lien law	Building Inspection	$5.00
Surcharge Bwd. Cty. Bd. of Rules & Appeals	Building Inspection	$0.60 per $1,000 valuation
Surcharge Fla. Statute 553.721	Building Inspection	1.5% of permit fees, minimum $2.00
Surcharge Fla. Statute 468.631	Building Inspection	1.5% of permit fees, minimum $2.00

27. E-PAYABLES

The City of Pompano Beach has implemented a voluntary E-Payables Program. This program allows the City to pay vendors via credit card and turn around vendor payments in a shorter timeframe than the traditional check payment mechanism.

How Does the Program Work?

The City will issue a unique credit card number to each vendor. Vendors would retain the credit card number on file. The card will retain a zero balance until payments have been authorized by the City. Once goods have been delivered or services rendered, vendors submit invoices to the Finance Department according to the normal process. When payments are processed by Finance and authorized, an email notification is sent to an email address provided by the vendor. The email notification includes the invoice number, invoice date, and amount of the payment. Once the vendor receives the email, the credit card has been authorized to be charged for the amount listed in the email. When the vendor charges the full amount authorized in the email the, the card will return to a zero balance until the next payment is authorized.

Is There a Cost to Participate in the Program?

The City of Pompano Beach does not charge vendors to participate in the program, however, there may be a charge by the company that processes your credit card transactions.

What are the Benefits of Receiving Payments by Credit Card?

Vendors that accept credit card payments are not subject to the City's payment terms of net 45 days. This will allow:

- Vendors to receive their payments sooner to use for day to day operations or investments.
- Vendors to quickly reduce outstanding Accounts Receivable balances.
- Vendors to reduce the cost of paper processing, employee time spent on preparing and making deposits and bank check processing fees.

Potential vendors may access more detailed information about the E-Payables Program at **http://www.bankofamerica.com/epayablesvendors**, including answers to "Frequently Asked Questions". Vendors may also contact the City's Finance Department at 954-786-4545.

Vendors submitting a proposal to the City should indicate in their response whether or not they would be willing to enroll in the City's E-Payables Program. Vendors ultimately awarded a contract with the City may contact the Finance Department at 954-786-4545 to enroll in the Program.

BID PROPOSAL

PROJECT IDENTIFICATION

Project Name: Street Light Replacement and Underground Electrical Repair

Bid Number: T-08-14

THIS BID IS SUBMITTED TO

OWNER: City of Pompano Beach, Florida

Address: 1190 N. E. 3rd Avenue, Pompano Beach, Florida 33060

BIDDER-COMPANY NAME

Name: _____

Address: _____

_____

NAME OF PERSON TO CONTACT FOR ADDITIONAL INFORMATION ON THIS BID

Name & Title:_____

Telephone Number: _____

Fax Number: _____

Email: _____

Date: _____

1. The undersigned BIDDER proposes and agrees, if this Bid is accepted, to enter into an agreement with OWNER in the form included in the Contract Documents to perform and furnish all Work as specified or indicated in the Contract Documents for the Contract Price and within the Contract Time indicated in this Bid and in accordance with the other terms and conditions of the Contract Documents.

2. BIDDER accepts all of the terms and conditions of the Advertisement or Invitation to Bid and Instructions to Bidders, including without limitation those dealing with the disposition of Bid Security. This Bid will remain subject to acceptance for ninety (90) Days after the Bid Opening. BIDDER will sign and submit the Agreement with the Bonds and other documents required by Bidding Requirements within ten (10) days after the date of OWNER'S Notice of Award.

3. In submitting this Bid, BIDDER represents, as more fully set forth in the Agreement, that:

A. BIDDER has examined copies of all the bidding Documents and of the following Addenda (receipt of all which is hereby acknowledged):

Date	Number
_____	_____
_____	_____
_____	_____
_____	_____

B. BIDDER has familiarized itself with the nature and extent of the Contract Documents, Work, site, locality, and all local conditions and Laws and Regulations that in any manner may affect cost, progress, performance or furnishing of the Work.

C. BIDDER has studied carefully all reports and drawings of physical conditions which are identified in the bid.

D. BIDDER has obtained and carefully studied (or assumes responsibility for obtaining and carefully studying) all such examinations, investigations, explorations, tests and studies (in addition to or to supplement those referred to in (C) above) which pertain to the subsurface or physical conditions at the site or otherwise may affect the cost, progress, performance or furnishing of the Work as BIDDER considers necessary for the performance or furnishing of the Work at the Contract Price within the Contract Time and in accordance with the other terms and conditions of the Contract Documents, and no additional examinations, investigations, explorations, tests, reports or similar information or data are or will be required by BIDDER for such purposes.

E. Bidder has reviewed and checked all information and data shown or indicated on the Contract Documents with respect to existing site conditions and assumes responsibility for such. No additional examinations, investigations, explorations, tests, reports or similar information or data in respect of said site are or will be required by Bidder in order to perform and furnish the Work at Work Contract Price, within the Contract Time and in accordance with other terms and conditions of the Contract Documents.

F. BIDDER has correlated the results of all such observations, examinations, investigations, explorations, tests, reports and studies with the terms and conditions of the Contract Documents.

G. BIDDER has given OWNER written notice of all conflicts, errors or discrepancies that it has discovered in the Contract Documents and the written resolution thereof by Owner is acceptable to Bidder.

H. This Bid is genuine and not made in the interest or on behalf of any undisclosed person, firm or corporation and is not submitted in conformity with any agreement or rules of any group, or corporation; BIDDER has not directly or indirectly induced or solicited any other Bidder to submit a false or sham Bid; BIDDER has not solicited or induced any person, firm or

corporation to refrain from bidding; and BIDDER has not sought by collusion to obtain for itself any advantage over any other Bidding or over OWNER.

4. BIDDER agrees that the construction of the Project will be substantially complete within 90 calendar days after the date when the Contract Time commences to run as provided in the GENERAL CONDITIONS, and completed and ready for final payment within 120 calendar days after the date when the Contract Time commences to run.

   BIDDER accepts the provisions of the Agreement as to liquidated damages in the event of failure to complete the Work on time.

5. BIDDER agrees that all Federal, State and local sales and use taxes are included in the stated bid prices for the Work.

6. BIDDER further proposes to accept as full payment for the work proposed herein the amounts computed under the provisions of the Contract Documents and based on the following unit prices (if applicable) represent a true measure of the labor, materials, equipment and any other incidentals required to perform the work, including all allowances for overhead and profit for each type and unit of work called for in these Contract Documents.

7. **BID PROPOSAL**

The project consists of furnishing all labor, equipment, tools, materials and all other incidentals required for the installation and repair of aluminum street light poles, and underground electrical breaks (locations listed in attachment "A"). All poles must be aluminum and must be FDOT wind load rating approved. The poles must have a break-away base and break-away fuse holder, according to the details as specified herein:

(The rest of the page has been left blank intentionally.)

Item	Description	Estimated Qty's	Unit	Unit Price	Amount
1	Furnish all labor, equipment, tools, materials and all other incidentals required for the installation of transformer bases as stated in attachment "A"	24	EA	$_____	$_____
2	Furnish all labor, equipment, tools, materials and all other incidentals required for the installation and repair of aluminum poles as stated in attachment "A"	20	EA	$_____	$_____
3	Furnish all labor, equipment, tools, materials and all other incidentals required for the installation of aluminum pole arms, as stated in attachment "A"	24	EA	$_____	$_____
4	Furnish all labor, equipment, tools, materials and all other incidentals required for the installation and of light fixtures as stated in attachment "A"	24	EA	$_____	$_____
5	Furnish and install all associated wiring	1	LF	$_____	$_____
6	Furnish all labor, equipment, tools, materials and all other incidentals required for the installation and repair of an underground electrical break at the corner of Sample Rd and Dixie Hwy between street light poles #813 and #814. Directional boring will be required. Flexible PVC 2" conduit and #4 gauge THHN insulated wire is required.	135	LF	$_____	$_____
7	Furnish all labor, equipment, tools, materials and all other incidentals required for the installation and repair of an underground electrical break at the corner of Copans Road and N.E. 5th Ave. between street light poles #754 and #755. Directional boring will be required. Flexible PVC 2" conduit and #4 gauge THHN insulated wire is required.	81	LF	$_____	$_____

8	Furnish all labor, equipment, tools, materials and all other incidentals required for the replacement/repair of broken mounting bolts for pole #384 as stated in attachment "A"	1	LS	$_____	$_____
9	Furnish all labor, equipment, tools, materials and all other incidentals required for the replacement/repair of a damaged base for pole #390 as stated in attachment "A"	1	LS	$_____	$_____
10	Furnish all labor, equipment, tools, materials and all other incidentals required for the replacement/repair of bent mounting bolts for pole #757 as stated in attachment "A"	1	LS	$_____	$_____
	Indemnification	1	LS	$10.00	$10.00
	GRAND TOTAL	1	LS		$_____

8. The above includes all the necessary excavation, backfill, grading, restoration, and removal of materials attendant upon the construction of the work, complete in place, and the disposal of all excess materials, and the final cleaning up of the work.

DATE _____ BIDDER: _____
(Corporation Name) (Partnership Name) (Trade Name)

BY: _____
Name & Title of Signer

_____
Manual Signature

Company Name: _____

Company Address: _____

_____(Zip) _____

Telephone #: (_____)_____

Facsimile #: (_____)_____

Federal I.D. #_____

State of Florida Contractor's license #_____

Broward County Certificate of Competency #:_____
Expiration Date: _____

9. At the preconstruction conference, the BIDDER shall submit a complete detailed schedule of shop drawing submittals which will show lead time for:

Date of Planned submittal.
Date of anticipated receipt of review (usually three weeks after submittal).
Delivery lead time.
Anticipated installation date.

10. Qualifications Of Bidders

To demonstrate qualifications to perform the Work, and to be considered for award, each Bidder must submit written evidence, such as previous experience, present commitments and other such data as may be called for below (or in SUPPLEMENTARY CONDITIONS). Each Bid must contain evidence of Bidder's qualification to do business in the State where the Project is located or covenant to obtain such qualification prior to executing the Agreement.

10.1 How many years has your organization been in business as a General Contractor?

_____

10.2 What is the last project of this nature that you have completed?

_____

10.3 Have you ever failed to complete work awarded to you? If Yes, where and why?

_____

_____

10.4 List all work performed over the last year.

Project Name _____

Owner's Name _____

Owner's Address _____

_____

Phone Number _____

Nature of Work _____

Original Contract Completion Time (Days) _____

Original Contract Completion Date _____

Actual Final Contract Completion Date _____

Original Contract Price _____

Actual Final Contract Price _____

(Attach additional information as required)

10.5 List all work of similar type, complexity, and comparable value over the past five (5) years and the nature of work performed. (Attach additional information on separate sheet)

Project Name _____

Owner's Name _____

Owner's Address _____

_____

Phone Number _____

Nature of Work _____

Original Contract Completion Time (Days) _____

Original Contract Completion Date _____

Actual Final Contract Completion Date _____

Original Contract Price _____

Actual Final Contract Price _____

10.6 The following are names as three (3) individuals or corporations for which you have performed work of this nature and to which you list as references, excluding the City of Pompano Beach.

NAME	ADDRESS	TELEPHONE	CONTACT PERSON

10.7 Have you personally inspected the proposed work and have you a complete plan for it performance?

_____

10.8 Will you sub-contract any part of this work? _____ Yes _____ No

If Yes, list all proposed subcontractors to be used on this project if the Bidder is awarded the Contract for this project. The successful Bidder shall submit a COMPLETE list of any work that he proposes to subcontract and the proposed subcontractors prior to execution of the contract.

CLASSIFICATION OF WORK	NAME AND ADDRESS OF SUBCONTRACTOR

(Submit any additional contractors to be used on a separate sheet.)

10.9 The following information shall be provided for this project:

(a) Estimated total construction manhours _____

(b) Percent manhours to be performed by Contractor's permanent staff _____

(c) Percent manhours to be performed by direct hire employees _____

(d) Percent manhours to be performed by Subcontractors _____

11. Equipment

11.0 What equipment do you own that is available for the proposed work?

_____

_____

_____

11.1 What equipment will you rent for the proposed work?

_____

_____

11.2 What equipment will you purchase for the proposed work?

_____

_____

12. Conflict Of Interest

For purposes of determining any possible conflicts of interest, all bidders must disclose if any City of Pompano Beach employee is also an owner, corporate officer, or employee of their business.

Indicate either "yes" (a City employee is also associated with your business), or "no". If yes, give person(s) names and position(s) with your business.

Yes _____ Name(s) and Position(s) _____

No _____

(Note: If answer is "yes", you must file a statement with the supervisor of Elections, pursuant to Florida Statutes 112.313).

13. If the BIDDER is:

An Individual

By

_____(SEAL)

(Individual's Name)

doing business as

_____

Business address:

_____

_____

Phone No.:

_____

A Partnership

By

_____(SEAL)

(Firm Name)

_____

(General Partner)

Business address:

_____

Phone No.:

_____

A Corporation

By

_____

(Corporation Name)

_____

(State of Incorporation)

By

_____

(Name of Person Authorized to sign)

_____

(Title)

(Corporate Seal)

Attest

_____

(Secretary)

Business address:

_____

_____

Phone No.: _____

A Joint Venture

By

_____

(Name)

_____

(Address)

By

_____

(Name)

_____

(Address)

(Each joint venturer must sign. The name for each individual, partnership and corporation that is a party to the joint venture should be in the manner indicated above.)

END OF SECTION

STATEMENT UNDER SECTION 287.087
FLORIDA STATUTES, ON DRUG-FREE WORKPLACE

TO BE RETURNED WITH BID

Preference must be given to Contractors submitting certification with their bid or proposal, certifying they have a drug-free workplace in accordance with Florida Statutes, Section 287.087. This requirement affects all public entities of the State and becomes effective January 1, 1991.

Preference shall be given to businesses with drug-free workplace programs. Whenever two or more bids which are equal with respect to price, quality and service are received by the State or by any political subdivision for the procurement of commodities or contractual services, a bid received from a business that certifies that it has implemented a drug-free workplace program shall be given preference in the award process. Established procedures for processing tie bids will be followed if none of the tied vendors have a drug-free workplace program. In order to have a drug-free workplace program, a business shall:

(1) Publish a statement notifying employees that the unlawful manufacture, distribution, dispensing, procession, or use of a controlled substance is prohibited in the workplace and specifying the actions that will be taken against employees for violations of such prohibition.

(2) Inform employees about the dangers of drug abuse in the workplace, the business's policy of maintaining a drug-free workplace, any available drug counseling, rehabilitation and employee assistance programs, and the penalties that may be imposed upon employees for drug abuse violations.

(3) Give each employee engaged in providing the commodities or contractual services that are under bid, a copy of the statement specified in subsection (1).

(4) In the statement specified in subsection (1) notify the employees that as a condition of working on the commodities or contractual services that are under bid, the employee will abide by the terms of the statement and will notify the employer of any conviction of, or plea of guilty or nolo contendere to, any violation of Chapter 893 or of any controlled substance law of the United States or any state, for a violation occurring in the workplace, no later than five (5) days after such conviction.

(5) Impose a sanction on, or require the satisfactory participation in, a drug abuse assistance or rehabilitation program if such is available in the employee's community, by an employee who is so convicted.

(6) Make a good faith effort to continue to maintain a drug-free workplace through implementation of this section.

As the person authorized to sign this statement, I certify that his firm complies with the above requirements.

_____ _____
CONTRACTOR'S SIGNATURE CONTRACTOR'S PRINTED NAME

Date: _____

BID BOND

STATE OF FLORIDA)
ss
)

KNOW ALL MEN BY THESE PRESENTS, that we , _____

_____ as principal, and

_____

hereinafter called Surety, are held and firmly bound unto The City of Pompano Beach, Pompano Beach, Florida, a political subdivision of the State of Florida, and represented by its City Commission hereinafter called OWNER, in the sum of _____ Dollars ($ _____) lawful money of the United States of America, for the payment of which well and truly to be made, we bind ourselves, our heirs, executors, administrators, successors and assigned, jointly and severally, by these presents.

WHEREAS, the Principal contemplates submitting or has submitted a Bid to the OWNER for the furnishing of all labor, materials, equipment, machinery, tools, apparatus, means of transportation for, and the performance of the work covered in the Proposal and the detailed Drawings and Specifications, entitled:

(Bid Name) _____

WHEREAS, it was a condition precedent to the submission of said bid that a cashier's check or bid bond in the amount of 5 percent of the base bid be submitted with said bid as a guarantee that the Bidder would, if awarded the Contract, enter into a written Contract with the OWNER for the performance of said Contract, within 10 consecutive calendar days after written notice having been given of the award of the Contract.

NOW, THEREFORE, the conditions of this obligation are such that is the Principal within 10 consecutive calendar days after written notice of such award being given to Principal, enters into the contract to such award and gives a Performance and Payment Bond, each in an amount equal to 100 percent of the base bid, satisfactory to the OWNER, then this obligation shall be void; in the event of the failure of Principal to enter into such contract and bond, the sum herein stated shall be due and payable to the OWNER and the Surety herein agrees to pay the sum immediately upon demand of the OWNER in good and lawful money of the United States of America, as liquidated damages for failure thereof of said Principal; otherwise, it shall remain in full force and effect.

IN WITNESS WHEREOF, the said _____,

as Principal herein, has caused these presents to be signed in the name by its _____

_____ and attested by its _____ under its corporate seal,

and the said _____

_____ as Surety herein, has caused these presents to be signed in its name by

its _____

under its corporate seal, this _____ day of _____ A.D. _____ (year)

Signed, sealed and delivered in
the presence of:

_____
Principal -

By: _____

_____

_____
As to Principal

_____

Surety
By:_____
Attorney-in-Fact
(Power-of-Attorney to be attached)

_____

_____

By: _____
Resident Agent

END OF SECTION

AGREEMENT

THIS AGREEMENT is dated as of the _____ day of _____ in the year _____ by and between CITY OF POMPANO BEACH, FLORIDA (hereinafter call OWNER) and _____ (hereinafter called CONTRACTOR).

OWNER and CONTRACTOR, in consideration of the mutual covenants hereinafter set forth, agree as follows:

Article 1. **WORK**

The project consist of the furnishing of all labor, equipment and materials for:
_____
_____
_____
_____
_____
_____

The Project for which the Work under the Contract Documents may be the whole or only a part is generally described as follows: (Bid Name)_____.

Article 2. ENGINEER

The Project has been designed by _____ who is hereinafter called ENGINEER and who is to act as OWNER'S representative, assume all duties and responsibilities and have the rights and authority assigned to ENGINEER in the Contract Documents in connection with completion of the Work in accordance with the Contract Documents.

Article 3. CONTRACT TIME

The Work will be substantially completed within _____ days from the date the Contract Time commences to run as provided in the GENERAL CONDITIONS, and completed and ready for final payment in accordance with the GENERAL CONDITIONS within _____ days from the date the Contract Time commences to run.

Article 4. LIQUIDATED DAMAGES

OWNER and CONTRACTOR recognize that time is of the essence of the Agreement and that OWNER will suffer financial loss if the Work is not completed within the times specified in Article 3, above, plus any extensions thereof allowed in accordance with the GENERAL CONDITIONS. They also recognize the delays, expense and difficulties involved in the proving in a legal or arbitration proceeding the actual loss suffered by OWNER if the Work is not completed on time. Accordingly, instead of requiring any such proof, OWNER and CONTRACTOR agree that as liquidated damages for delay (but not as a penalty) CONTRACTOR shall pay OWNER two hundred and 00/100 dollars ($200.00) for each day that expires after the time specified in Article 3 for Substantial Completion, plus any monies paid by the OWNER to the ENGINEER for additional engineering and inspection services until the Work is substantially complete. After Substantial Completion if CONTRACTOR shall neglect, refuse or fail to complete the remaining Work within the Contract Time or any proper extension thereof granted by OWNER, CONTRACTOR shall pay the OWNER one hundred and 00/100 ($100.00) for each day that expires after the time specified in Article 3 for completion of Work and readiness for final payment, plus any monies paid by the OWNER to the ENGINEER for additional engineering and inspection services.

Article 5. CONTRACT PRICE

OWNER shall pay CONTRACTOR for completion of the Work in accordance with the Contract Documents in current funds as follows:

See BID PROPOSAL attached from bid/contract documents.

Article 6. PAYMENT PROCEDURES

6.1 CONTRACTOR shall submit Applications for Payment in accordance with the GENERAL CONDITIONS. Applications for Payment will be processed by ENGINEER as provided in the GENERAL CONDITIONS.

6.2 Progress Payments. OWNER shall make progress payments on account of the Contract Price on the basis of CONTRACTOR'S Applications for Payment as recommended by ENGINEER, on or about the 1st day of each month during construction as provided below. All progress payments will be on the basis of the progress of the Work measured by the schedule of values established in the GENERAL CONDITIONS (and in the case of Unit Price Work based on the number of units completed) or, in the event there is no schedule of values, as provided in the General Requirements.

6.2.1 Prior to Substantial Completion, progress payments will be made in an amount equal to the percentage indicated below, but, in each case, less the aggregate of payments previously made and such amounts as ENGINEER shall determine, or OWNER may withhold, accordance with the GENERAL CONDITIONS.

10% of Work completed will be withheld by OWNER as retainage.

6.2.2 Upon Substantial Completion, in an amount sufficient to increase total payments to CONTRACTOR to 90% of the Contract Price, less such amounts as ENGINEER shall determine, or OWNER may withhold, in accordance with the GENERAL CONDITIONS.

6.3 Final Payment. Upon final completion and acceptance of the Work in accordance with the GENERAL CONDITIONS, OWNER shall pay the remainder of the Contract Price as recommended by ENGINEER as provided in said GENERAL CONDITIONS.

Article 7. CONTRACTOR'S REPRESENTATIONS

In order to induce OWNER to enter into this Agreement, CONTRACTOR makes the following representations:

7.1 CONTRACTOR has familiarized itself with the nature and extent of the Contract documents,

Work, site, locality, and all local conditions and Laws and Regulations that in any manner may affect cost, progress, performance or furnishing of the Work.

7.2 CONTRACTOR has studied carefully all reports of explorations and tests of subsurface conditions and drawings of physical conditions which are identified in the bid, and accepts the determination set forth in the bid of the extent of the technical data contained in such reports and Drawings upon which CONTRACTOR is entitled to reply.

7.3 CONTRACTOR has obtained and carefully studied (or assumes responsibility for obtaining and carefully studying) all such examinations, investigations, explorations, tests, reports and studies in addition to or to supplement physical conditions at or contiguous to the site or otherwise may affect the cost, progress, performance or furnishing of the Work as CONTRACTOR considers necessary for the performance or furnishing of the Work at the Contract Price, within the Contract Time and in accordance with other terms and conditions of the Contract Documents, including specifically the provisions of the GENERAL CONDITIONS; and no additional examinations, investigations, explorations, tests, reports, studies or similar information or data are or will be required by CONTRACTOR for such purposes.

7.4 CONTRACTOR has reviewed and checked all information and data shown or indicated on the Contract Documents with respect to existing Underground Facilities at or contiguous to the site and assumes responsibility for the accurate location of said Underground Facilities. No additional examinations, or investigations, explorations, tests, reports, studies or similar information or data in respect of said Underground Facilities are or will be required by CONTRACTOR in order to perform and furnish the Work at the Contract Price, within the Contract Time and in accordance with the other terms and conditions of the Contract Documents.

7.5 CONTRACTOR has correlated the results of all such observations, examinations, investigations, explorations, tests, reports and studies with the terms and conditions of the Contract Documents.

7.6 CONTRACTOR has given ENGINEER written notice of all conflicts, errors or discrepancies that he has discovered in the Contract Documents and the written resolution thereof by ENGINEER is acceptable to CONTRACTOR.

Article 8. CONTRACT DOCUMENTS

The Contract Documents which comprise the entire agreement between OWNER and CONTRACTOR concerning the Work consist of the following:

8.1 This Agreement.

8.2 Exhibits to this Agreement.

8.3 Performance and other Bonds, identified as exhibits Performance and Payment Bond.

8.4 Notice of Award.

8.5 GENERAL CONDITIONS.

8.6 SUPPLEMENTARY CONDITIONS.

8.7 Specifications bearing the title (Bid Name _____ consisting of (# of sections ____) and (_____)pages, as listed in table of contents thereof.

8.8 Drawings, consisting of a cover sheet and sheets numbered (___) through (____) inclusive with each sheet bearing the following general title:

(Bid Name)_____

8.9 Addenda numbers _____ to _____, inclusive.

8.10 Contractor's Bid pages.

8.11 Contractor's Sworn Statement on Drug-Free Workplace Section 287.087, Florida Statutes, on Drug-Free Workplace and consisting of one (1) page.

8.12 Documentation submitted by CONTRACTOR prior to Notice of Award (Pages _____ to _____, inclusive).

8.13 The following which may be delivered or issued after the Effective Date of the Agreement and are not attached hereto: All Written Amendments and other documents amending, modifying, or supplementing the Contract Documents pursuant to the GENERAL CONDITIONS.

8.14 The documents listed in paragraphs 8.2 et seq. above are attached to this Agreement (except as expressly noted otherwise above). There are no Contract Documents other than those listed above in the Article 8.

8.15 The insurance certificate detailing terms and provisions of coverage as required by the bid and approved by the City of Pompano Beach Risk Manager.

The Contract Documents may only be amended, modified or supplemented as provided in the GENERAL CONDITIONS.

Article 9. MISCELLANEOUS

9.1 Terms used in this Agreement which are defined in the GENERAL CONDITIONS will have the meanings indicated in the GENERAL CONDITIONS.

9.2 No assignment by a party hereto of any rights under or interests in the Contract Documents will be binding on another party hereto without the written consent of the party sought to be bound; and specifically but without limitation moneys that may become due and moneys that are due may not be assigned without such consent (except to the extent that the effect of this restriction my be limited by law), and unless specifically stated to the Contrary in any written consent to an assignment no assignment will release or discharge the assignor from any duty or responsibility under the Contract Documents.

9.3 OWNER and CONTRACTOR each binds itself, its partners, successors, assigns and legal representatives to the other party hereto, its partners, successors, assigns and legal representatives in respect of all covenants, agreements and obligations contained in the Contract Documents.

Witnesses:

CITY OF POMPANO BEACH

_____

By: _____
Lamar Fisher, Mayor

_____

By: _____
Dennis W. Beach, City Manager

Attest:

_____
Mary L. Chambers, City Clerk

(SEAL)

Approved as to form:

_____
Gordon B. Linn, City Attorney

STATE OF FLORIDA
COUNTY OF BROWARD

The foregoing instrument was acknowledged before me this _____ day of _____, 2012 by **LAMAR FISHER**, as Mayor, **DENNIS W. BEACH** as City Manager and **MARY L. CHAMBERS**, as City Clerk of the City of Pompano Beach, Florida, a municipal corporation, on behalf of the municipal corporation, who are personally known to me.

NOTARY'S SEAL:

_____
NOTARY PUBLIC, STATE OF FLORIDA

_____
(Name of Acknowledger Typed, Printed or Stamped)

_____
Commission Number

CONTRACTOR

_____
(Print name of company

Witnesses:

By:_____

_____

Print Name:_____

_____

Title:_____

ACKNOWLEDGMENT OF CONTRACTOR, IF AN INDIVIDUAL

STATE OF }
} ss:
COUNTY OF }

On this _____ day of _____, _____, before me personally came and appeared _____, to me known to me to be the person described in and who executed the foregoing contract and acknowledged that he executed the same.

Witness my hand and official notarial seal at _____ _____ the day and year above written.

_____
Notary Public

My Commission Expires: _____

ACKNOWLEDGMENT OF CONTRACTOR, IF A PARTNERSHIP

STATE OF }
} ss:
COUNTY OF }

On this _____ day of _____, _____, before me personally came and appeared _____, known to me to be one of the members of the partnership of _____ _____ described in and who executed the foregoing instrument and he acknowledged that he executed the same on behalf of said partnership and that same is the act and deed of said partnership.

Witness my hand and official notarial seal at _____ _____ the day and year above written.

_____
Notary Public

My Commission Expires: _____

ACKNOWLEDGMENT OF CONTRACTOR, IF A CORPORATION

STATE OF }
} ss:
COUNTY OF }

On this _____ day of _____, _____, before me personally came and appeared _____, to me known, who, being by me duly sworn, did depose and say that he resides at _____ _____, that he is the _____ of _____, the corporation described in and which executed the foregoing instrument; that he knows the seal of said corporation; that one of the impressions affixed to said instrument is an impression of such seal; that he is the proper official of said corporation designated to execute such contract, that he has authority so to do, that he executed same for and in behalf of said corporation, and this his act is the act and deed of said corporation.

Witness my hand and official notarial seal at _____ _____ the day and year above written.

_____
Notary Public

My Commission Expires: _____

General Conditions of the Contract

ARTICLE 1. DEFINITIONS.

1.01 **The Contract Documents:** The Contract Documents consist of the Agreement Form, Addenda, Supplementary Conditions, General Conditions, Documents contained in the Project Manual, Drawings, Plans, Specifications, and all modifications issued after execution of the Contract.

1.02 **The Owner, the Contractor, and the Project Consultant:** are those mentioned as such in the Contract Documents.

1.02.01 **Owner**: The City of Pompano Beach, Florida, (also referred to as the "City").

1.02.02 **Contractor**: The "party of the second part" to the Contract. The person, firm or corporation with whom a contract has been made with the Owner for the performance of the Work defined by the Contract Documents.

1.02.03 **Project Consultant:** The individual, partnership, corporation, association, joint venture, or any combination thereof, of properly registered professional architects, engineers or other design professionals who has entered into a contract with the Owner to provide professional services for development of the design and Contract Documents for the Work of this Project and provide Construction Contract Administration as described in the Contract Documents.

1.03 **City Engineer:** City Engineer of the City of Pompano Beach, Florida.

1.04 **Final Completion**: Means that date subsequent to the date of Substantial Completion at which time the Contractor has completed all of the Work (or designated portion thereof) in accordance with the Contract Documents as certified by the Project Consultant and/or approved by the Owner. In addition, Final Completion shall not be deemed to have occurred until any and all governmental bodies, boards, entities, etc., which regulate or have jurisdiction of the Work, have inspected, approved and certified the Work.

1.06 **Inspector:** An employee(s) of The City of Pompano Beach, Florida, referred to hereinafter as the "**Inspector,**" who(m) is/are assigned by the City Engineer to periodically inspect the Project during the construction process, and who assist(s) the City Engineer in reviewing field performance and its compliance with the Contract Documents.

1.06.01 **Resident Inspector:** An employee or subconsultant of the **Project Consultant** employed to perform either periodic or full-time specific inspection duties.

1.07 **Other Contractors**: Any person, firm or corporation with whom a Contract has been made by the Owner for the performance of any work on the site, which work is not a portion of the Work covered by the Contract.

1.08 **Owner's Representative**: The City Official who has been delegated responsibility by the City Manager to act as the City's project coordinator. (In most cases, the City Engineer shall be assigned this duty.)

1.09 **Phase**: A designated subdivision of the Work, usually with its own requirements for Substantial and Final Completion, and liquidated damages. A Phase may be designated for completion by the Owner's own forces, or by Other Contractors.

1.10 **The Project**: The total construction of which the Work performed under the Contract Documents may be the whole or a part and which may include construction by the Owner or by separate contractors.

1.11 **Punch List**: A list of items of work required to render complete, satisfactory, and acceptable the construction services provided for in the Contract Documents and created pursuant to Florida Statute 218.735(7)(a).

1.12 **Subcontractor**: A person or entity other than a materialman or laborer who enters into a Contract with Contractor for the performance of any part of Contractor's Work. The term "Subcontractor" is referred to throughout the Contract Documents as if singular in number and means a Subcontractor or an authorized representative of the Subcontractor. The term "Subcontractor" does not include a separate contractor or subcontractors of a separate contractor.

1.13 **Sub-subcontractor**: A person or entity other than a materialman or laborer who enters into a contract with a Subcontractor for the performance of any part of such Subcontractor's contract. The term "Sub-subcontractor" is referred to throughout the Contract Documents as if singular in number and means a Sub-subcontractor or an authorized representative of the Sub-subcontractor. The term "Sub-subcontractor" does not include separate subcontractors of a separate contractor.

1.14 **Submittals**: Are prepared by the Contractor or those working on his behalf (subcontractors, material suppliers, and others) to show how a particular aspect of the Work is to be fabricated and installed. The Contractor's submittals include shop drawings, product data, samples, mock-ups, test results, warranties, maintenance agreements, workmanship bonds, project photographs, record documents, field measurement data, operating and maintenance manuals, reports, certifications, periodic and final "as-builts", surveys, videos and other types of information described in the specifications.

1.15 **Substantial Completion**: The term Substantial Completion as used herein, shall mean that point at which, as certified in writing by the Project Consultant, the Work, or a designated portion thereof, is at a level of completion in substantial compliance with the Contract Documents such that the Owner or its designee can enjoy use or occupancy and can use or operate it in all respects for its intended purpose. In the event the Work includes more than one Phase, the Owner, at its discretion, may set Substantial Completion dates for each Phase and may impose provisions for liquidated damages for each Phase.

1.16 **Subconsultant:** A person or organization of properly registered professional architects, engineers or other design professionals who has entered an agreement with the Project Consultant to furnish professional services in support of the Project Consultants agreement with the Owner.

1.17 **Superintendent**: The executive representative for the Contractor present on the work at all times during progress, authorized to receive and fulfill instructions from the Owner and the Project Consultant and capable of superintending the work efficiently.

1.18 **Work**: The totality of the obligations, including construction and other services, imposed on the Contractor by the Contract Documents, whether completed or partially completed, and including all labor, materials, equipment, and services provided or to be provided by the Contractor to fulfill the Contractor's obligations. The Work may constitute the whole or a part of the Project.

1.19 **Written Notice**: Shall be deemed to have been duly served if delivered in person to the individual or to a member of the firm or to an officer of the corporation for whom it is intended, if delivered at or sent by registered mail or other traceable delivery service to the last business address known to him who gives notice. Electronic, FAX or other telephonic transmission shall not be considered as written notice.

ARTICLE 2. THE WORK.

2.01 The Contractor shall perform all of the Work required by the Contract Documents and shall provide materials, supplies, tools, equipment, labor and services directly related to the Work, and shall perform the Work in a good and workmanlike manner with sufficient manpower to perform the Work in accordance with the time requirements set forth in the Contract Documents, and shall perform all other acts and supply all other things necessary to complete the Work in strict accordance with the Contract Documents.

2.02 When completed the Work shall conform to the requirements of the Contract Documents and be completely ready for occupancy and finally completed.

2.03 The Contractor represents and warrants to the Owner that:

2.03.01 It is financially solvent and has sufficient working capital to perform the obligations under this Construction Contract;

2.03.02 It is experienced and skilled in the construction of the type of project described in the Contract Document;

2.03.03 It is able to provide the labor, materials, equipment and machinery necessary to complete the Work for the agreed upon price;

2.03.04 It is fully licensed under all applicable laws and authorized to do business in the State of Florida in the name of the entity identified as the "Contractor" in the Construction Contract, and is legally permitted to perform all the work set forth in this Construction Contract.

2.03.05 It has visited the jobsite and examined its nature and location, including without limitation: the surface conditions of the site and any structure or obstruction both natural or man-made; the surface water conditions and water ways of the site and surrounding area; the subsurface conditions of the land as disclosed by soil test borings; and the location of electric and utility lines and water, sanitary, sewer and storm drain lines, as well as site ingress and egress. The Contractor acknowledges receipt and has reviewed the site geotechnical report provided for the Owner.

2.03.06 It will comply with all federal, state and local governmental laws, rules and regulations relating to its responsibilities as set forth in the Contract Documents.

ARTICLE 3. COORDINATION AND CORRELATION OF DRAWINGS AND SPECIFICATIONS.

3.01 The Contractor represents that:

3.01.01 The Contractor and Subcontractors have fully examined and compared all Drawings, Specifications and other Contract Documents including but not limited to those relating to the architectural, structural, mechanical, electrical, civil engineering and plumbing elements and have compared and reviewed all general and specific details on the Drawings and the various technical and administrative requirements of the Specifications.

3.01.02 All construction materials, labor, methods, means, techniques, sequences and procedures required to carry out the Work, all safety precautions and programs required in connection with carrying out the Work, all conflicts, discrepancies, errors and omissions that Contractor is aware of as a result of the examination and comparison of the Contract Documents have been either corrected or clarified to the satisfaction of the Contractor prior to execution of this Construction Contract.

3.01.03 The Contract Sum is reasonable compensation and represents the total lump sum cost for the Work and that all systems and Work shall be functional and in accordance with the requirements of the Contract Documents.

3.01.04 The Contract Time is adequate for the performance of the Work.

3.02 The Contractor is responsible for all means, methods, techniques and sequencing of construction.

3.03 If, after execution of this Construction Contract, the Contractor detects a conflict, discrepancy, error or omission in the Contract Documents then it shall immediately notify Project Consultant and Owner prior to proceeding with the specific portion of the Work.

ARTICLE 4. INTENT AND INTERPRETATION.

4.01 With the respect to the intent and interpretation of this Contract, the Owner and the Contractor agree as follows:

4.01.01 The Contractor shall have a continuing duty to read, examine, review, compare and contrast each of the documents which make up this Contract and shall immediately give written notice to the Owner and the Project

Consultant of any conflict, ambiguity, error or omission which the Contractor may find with respect to these documents before proceeding with the affected Work.

4.01.02 The Contract Documents are complementary, and what is called for by one shall be as binding as if called for by all.

4.01.03 The intent of the Contract Documents is to include all labor, materials, equipment services and transportation necessary for the proper execution of the Work. The Contractor shall continually refer to drawing, specifications and other Contract Documents in this regard.

4.01.04 In the event of a conflict among the Contract Documents, the most stringent requirement to the Contractor shall control.

4.02 The Project Consultant shall be the initial interpreter of the requirements of the Contract Documents and the judge of the performance thereunder.

4.02.01 The Project Consultant shall render interpretations necessary for the proper execution or progress of the Work with reasonable promptness on written request of either the Owner or the Contractor, and shall render written decisions, within a reasonable time, on all claims, disputes, change order requests, substitution requests, requests for interpretation and other matters in question between the Owner and the Contractor relating to the execution or progress of the Work or the interpretation of the Contract Documents.

4.02.02 Interpretations and decisions of the Project Consultant shall be consistent with the intent of and reasonably inferable from the Contract Documents.

4.02.03 In the capacity of interpreter the Project Consultant shall endeavor to secure faithful performance by both the Owner and the Contractor, and shall not show partiality to either.

ARTICLE 5. OWNERSHIP OF THE CONTRACT DOCUMENTS WHICH MAKE UP THE CONTRACT

5.01 Subject to any rights the Project Consultant may have, the Contract Documents and each of them, as well as any other documents, intellectual property, software, computer-assisted material or disks relating to or regarding the Work, shall be and remain the property of the Owner. This shall be the case even if prepared, created or provided by the Project Consultant, Contractor, Subcontractor or others.

5.02 The Contractor shall have the right to keep copies of same upon completion of the Work; provided, however, that in no event shall the Contractor use, or permit to be used, any portion or all of same on other projects without the Owner's prior written authorization.

5.03 The Contractor agrees to provide any and all items referred to in this Paragraph to Owner upon demand by Owner. In the event Contractor fails to provide same to Owner as demanded, Contractor acknowledges that the Owner will need same and will be irreparably harmed and be subject to an injunction to provide same.

ARTICLE 6. TEMPORARY UTILITIES.

6.01 Water For Execution of the Work: The Contractor shall provide temporary water lines sufficient to supply all water needed for the construction and other services required by the Contract Documents and shall pay for all service connections and water used by the Contractor or Subcontractors unless the contrary is provided for elsewhere in the Contract Documents.

6.02 Electrical Energy: The Contractor shall provide temporary electrical energy and power lines sufficient to supply all electricity needed for the construction and other services required by the Contract Documents and shall pay for all service connections and electricity used by the Contractor or Subcontractors unless the contrary is provided for elsewhere in the Contract Documents.

6.03 Temporary Sanitary Facilities And Sewers:

6.03.01 The Contractor shall provide and maintain in a neat and sanitary condition such accommodations and facilities for the use of his employees as may be necessary to comply with the regulations of any governmental agencies, departments, etc. which address or govern these issues.

6.03.02 No nuisance will be permitted.

6.03.03 Upon completion of Work, such facilities shall be removed and the premises left in a sanitary condition.

6.03.04 Contractor is not permitted to use restrooms or other sanitary facilities within the Owner's existing building or on-site facilities unless the contrary is provided for elsewhere in the Contract Documents.

ARTICLE 7. PROGRESS.

7.01 Contractor shall provide the Owner with full information in advance as to its plans for performing each part of the Work. This shall include, but not be limited to, schedules provided to the Owner as Post-Award Information and subsequently updated schedules submitted to the Owner on a monthly basis as required in Article 10 below, as a condition precedent to payment(s).

7.01.01 Such schedule shall be in a form acceptable to the Owner.

7.01.02 The Contractor's schedule shall be updated no less frequently than monthly (unless the parties otherwise agree in writing) and shall be updated to reflect conditions encountered from time to time and shall apply to the total Project.

7.01.03 Each such revision shall be provided to the Owner and the Project Consultant.

7.01.04 Compliance with the requirements of this Subparagraph shall be a condition precedent to payment to the Contractor, and failure by the Contractor to comply with said requirements shall constitute a material breach of this Contract.

7.01.05 By providing these Schedules to Owner, Owner does not in any way acknowledge or consent that the Schedules are acceptable or reasonable, but it is simply reviewing same for its own informational purposes.

7.02 If at any time during the progress of Work, the Contractor's actual progress is inadequate to meet the requirements of the Contract Documents, such as the required completion dates, the Owner may so notify Contractor who shall thereupon take such steps as may be necessary to improve its progress so as to complete the Work on or before the required Substantial Completion Date.

7.02.01 If within a reasonable period as determined by Owner, the Contractor does not improve performance to meet the requirements of the Contract Documents, such as the required completion dates, then the Owner may require an increase in any or all of the following: Contractor's Subcontractor crews and Contractor's own labor force, the number of shifts, overtime operation, Contractor's supervision and additional days of work per week, all without cost to Owner.

7.02.02 Neither such notice by Owner nor Owner's failure to issue such notice shall relieve Contractor of its obligation to achieve the quality of work and rate of progress required by the Contract Documents.

7.03 Failure of Contractor to comply with the instructions of the Owner may be grounds for determination by Owner that Contractor is not prosecuting its Work with such diligence as will assure completion within the time specified.

7.04 Upon such determination, Owner, in addition to any and all other rights set forth in the Contract Documents and remedies afforded Owner under the Contract Documents or at law, may:

7.04.01 Elect to proceed with the Work with its own employees, agents, contractors, subcontractors, suppliers and assess all costs, expenses or fees for same against contractors and/or

7.04.02 Terminate for cause Contractor's right to proceed with the performance pursuant to the Contract Documents, or any separable part thereof, in accordance with the applicable provisions of the Contract Documents.

ARTICLE 8. EXPEDITING

8.01 The Work, equipment and material provided under this Contract may be subject to expediting by Owner.

8.02 Owner shall be allowed reasonable access to the shops, factories and other places of business of the Contractor and/or Subcontractors for expediting purposes.

8.03 As required by Owner, Contractor shall supply schedules and progress reports for Owner's use in expediting, and Contractor shall cooperate with Owner and require Subcontractors to cooperate with Owner in such expediting.

8.04 Any expediting performance by Owner shall not relieve Contractor of its sole and primary responsibility for timeliness of delivery of the equipment and material to be provided under the Contract Document.

ARTICLE 9. COMPLETION

9.01 When the Contractor considers that the Work, or a portion thereof which the Owner agrees to accept separately, is substantially complete, the Contractor shall prepare and submit to the Project Consultant a comprehensive Punch List of items to be completed or corrected prior to final payment. Failure to include an item on the Punch List does not alter the responsibility of the Contractor to complete all Work in accordance with the Contract Documents.

9.01.01 For a Project with an estimated cost of less than $10 million, the Punch List shall be completed within thirty (30) calendar days after Substantial Completion of the Project, as same is defined in the Contract Documents. If Substantial Completion is not defined in the Contract Documents, the list shall be completed upon reaching beneficial occupancy or use.

9.01.02 For a Project with an estimated cost of $10 million or more, the Punch List shall be completed within thirty (30) calendar days, unless otherwise extended elsewhere in the Contract Documents, but not to exceed sixty (60) calendar days, after reaching Substantial Completion, as same is defined in the Contract Documents. If Substantial Completion is not defined in the Contract Documents, the list shall be completed upon reaching beneficial occupancy or use.

9.02 For a Project involving the construction of more than one building or structure, or involving a multiphased project, a Punch List shall be created for each building, structure, or phase of the Project pursuant to the limitations provided for above in 9.01.01 and 9.01.02, as applicable.

9.03 The failure to include any corrective work or pending items not yet completed on the List does not alter the responsibility of the Contractor to complete all the construction services purchased pursuant to the contract. All items that require correction under the Contract Documents and that are identified after the preparation and delivery of the Punch List remain the obligation of the Contractor as defined by the Contract Documents.

9.04 Upon completion of all of the items on the Punch List, the Contractor may submit a payment request for all remaining retainage withheld by the local governmental entity pursuant to this section. If a good faith dispute exists as to whether one or more items identified on the list have been completed pursuant to the Contract Documents, the Owner may continue to withhold an amount not to exceed 150 percent of the total costs to complete the outstanding item.

9.05 In the event that the Contractor fails, in whole or in part, to comply with the obligations and responsibilities required hereunder in paragraph 9.01, the Owner need not pay or process any payment request for remaining retainage.

ARTICLE 10. CONTRACT PAYMENTS

10.01 Schedule of Values:

10.01.01 The Contractor shall maintain and update the Schedule of Values originally provided to the Owner as Post-Award Information.

10.01.02 The Contractor's Schedule of Values apportions the Contract Price among the different elements of the required Work for purposes of periodic and final payments and shall be submitted as detail in support of the Contractor's monthly Application for Payment.

10.01.03 The Schedule of values shall be presented with such detail, and supported with whatever information the Project Consultant or the Owner reasonably requests.

10.01.04 The Contractor shall not imbalance its Schedule of Values nor artificially inflate or exaggerate any element thereof. Contractor's failure to comply with this provision shall be grounds for Owner to terminate Contractor, as provided for elsewhere herein.

10.02 The Owner shall pay the Contract Price to the Contractor in accordance with the procedures provided herein.

10.02.01 On or before the **15th** day of each month after commencement of performance, but no more frequently than once monthly, the Contractor may submit an Application for Payment to the Owner for the period ending the last day of the previous month or other pay period as mutually defined and agreed to by the Contractor and Owner and as provided for in the Contract Documents. The Contractor shall also deliver a copy of the Application for Payment to the Project Consultant.

10.02.02 Said Application for Payment shall be in the format required elsewhere in the Contract Documents and include whatever supporting information as may be required by the Project Consultant, the Owner, or both.

10.02.03 The Owner shall not be required to pay for stored materials or equipment except as set forth in Article 25 below.

10.02.04 Each Application for Payment shall be signed by the Contractor and shall constitute the Contractor's representation that the quantity of work has reached the level for which payment is requested, that the Work has been properly installed or performed in substantial compliance with the requirements of the Contract Documents, and that the Contractor knows of no reason why payment should not be made as requested.

10.02.05 Upon receipt of the Application for Payment, the Project Consultant shall:

a. Within ten (10) days review the Application for Payment and may also review the Work at the Project site or elsewhere to determine whether the quantity and quality of the Work is as represented in the Application for Payment and is as required by the Contract Documents.

b. Approve in writing the amount which, in the opinion of the Project Consultant, is properly owing to the Contractor.

10.02.06 The Owner shall make payment to the Contractor within fifteen (15) days following the Project Consultant's written approval of the Application for Payment but in no event later than twenty-five (25) days after the invoice was received by the Owner.

10.02.07 The Owner may reject the Application for Payment within twenty (20) business days after the date on which the Application for Payment is stamped as received. The rejection shall be in writing and shall specify the deficiency in the payment request or invoice and the action necessary to make the payment request or invoice proper.

10.02.08 If the Owner disputes a portion of an Application for Payment, the undisputed portion must be timely paid.

10.02.09 The Contractor may submit a corrected Application for Payment which corrects the deficiency or deficiencies specified in writing by the Owner. The Owner shall either pay or reject the corrected Application for Payment within ten (10) business days after receipt of same.

10.02.10 If a dispute regarding the Application for Payment cannot be resolved pursuant to the process outlined herein, it must be resolved in accordance with the dispute resolution procedures outlined in Article 45.

10.02.11 The amount of each monthly payment shall be the amount approved for payment by the Project Consultant less such amounts, if any, otherwise owing by the Contractor to the Owner or which the Owner shall have the right to withhold as authorized by the Contract Documents or reasonable business practices. In the event of a dispute with regard to a portion of the Application for Payment, the Owner shall pay the undisputed portion pursuant to the timeline established in this Section.

10.02.12 The Project Consultant's approval of the Contractor's Applications for Payment shall not preclude the Owner from the exercise of any of its rights as set forth in the Contract Documents.

10.02.13 The submission by the Contractor of an Application for Payment also constitutes an affirmative representation and warranty that all Work for which the Owner has previously paid is free and clear of any lien, claim, or other encumbrance by any person whatsoever.

10.02.14 As a condition precedent to payment, the Contractor shall, as required elsewhere in the Contract Documents and as required by the Owner, also provide to the Owner documents relating to the Project, including but not limited to, updated schedules and daily logs, properly executed documents that all subcontractors, materialmen, suppliers or others having rights, acknowledge receipt of all sums due pursuant to all prior Payment Requests and waive and relinquish any rights or other claims of any nature relating to the Project.

10.02.15 Furthermore, the Contractor warrants and represent that, upon payment of the Application for Payment submitted, title to all work included in such payment shall be vested in the Owner.

10.02.16 Dollar Value/Time Graphs: Each of the Contractor's Application for Payment shall be accompanied by a graph, prepared by the Contractor, that consecutively tracks the percentage of completion of both the Application for Payment's dollar value attained and the contract time (calendar days) elapsed, all coinciding with the date of the Application for Payment.

10.03 When payment is received from the Owner, the Contractor shall within five (5) days pay all subcontractors, materialmen, laborers and suppliers the amounts they are due for all work covered by such payment. In the event such payments are not made in a timely manner the Owner may, in its discretion, invoke reasonable procedures in order to protect Owner's interest or Owner's desire to assist in having subcontractors, laborers, suppliers, materialmen or others paid.

10.04 It is mutually agreed that payments made under this Contract shall not constitute acceptance of defective or improper materials or workmanship nor shall same act as a waiver or release of future performance in accordance with the Contract Documents.

ARTICLE 11. WITHHOLDING PAYMENT TO CONTRACTOR

11.01 The Owner may withhold as retainage ten (10) percent of the payment owed to the Contractor until fifty-percent (50%) completion of the Project. After fifty-percent (50%) completion is reached, the Owner will reduce the amount of retainage withheld from each subsequent progress payment to five percent.

11.01.01 Fifty-percent (50%) completion shall be defined in the Contract Documents. If not defined, fifty-percent (50%) completion shall be the point at which the Owner has expended fifty-percent (50%) of the total cost of the construction services purchased with all costs associated with existing change orders and any other additions or modifications to the construction services provided for in the Contract Documents.

11.01.02 After fifty-percent (50%) completion of the Project, the Contractor may present to the Owner an Application for Payment of up to one-half of the retainage retained by the Owner prior to the fifty-percent completion date. The Owner shall promptly make such payment unless the Owner has grounds for withholding the payment retainage as provided herein.

11.02 If the City pays the retainage amount upon the Contractor's request which is attributable to the labor, services, or materials supplied by one or more contractors or suppliers, the Contractor shall timely remit payment of such retainage to those subcontractors or suppliers.

11.03 Regardless of the provisions in this Article, in no event shall the Owner be required to pay or release any amounts that are the subject of a good faith dispute, a claim brought pursuant to Fla. Stat. § 255.05, or otherwise the subject of a claim or demand by the Owner.

11.04 In addition to the Retainage, payments, including but not limited to Final Payment, may be withheld or reduced by the Owner in its sole discretion if any of the following exists:

11.04.01 The Work is not proceeding in accordance with the Construction Documents Schedule as anticipated by the Project Consultant or the Owner. In that event, the Project Consultant or the Owner will assess the anticipated delay and the Owner will use the amounts specified for Liquidated Damages as the basis for amounts withheld. Said funds shall be held until such time as the Project Consultant or Owner determine that the Work is back on schedule. By making said funds available to Contractor, Owner does not waive its right to assess liquidated damages at the completion of the Project;

11.04.02 Liquidated Damages as set forth in this Contract;

11.04.03 Defective Work unremedied;

11.04.04 Punch-List items unremedied;

11.04.05 Subject to Owner's written notice to Contractor in accordance with the Contract Documents back charge items for work performed by Owner or another contractor at the request of Owner, which work is within the scope of the Work under this Construction Contract;

11.04.06 Claims filed by subcontractors, laborers, suppliers, materialmen or others;

11.04.07 Failure to comply with any and all insurance requirements;

11.04.08 Failure of the Contractor to make payment properly to Subcontractors or others;

11.04.09 Damage to the Owner or another contractor;

11.04.10 Reasonable evidence that the Work will not be completed on or before the Substantial Completion or Final Completion Date;

11.04.11 Failure of the Contractor to carry out any of its obligations in accordance with the Contract Documents;

11.04.12 Failure of the Contractor to submit the information or documents required by this Contract or reasonably required by Owner, including but not limited to schedules and daily logs.

ARTICLE 12. CONTRACTOR'S RIGHT UPON NONPAYMENT.

12.01 If within thirty (30) days of the date payment to the Contractor is due, the Owner, without cause or basis hereunder, fails to pay the Contractor any amounts then due and payable to the Contractor, the Contractor shall have the right to cease work until receipt of proper payment after first providing ten (10) days written notice of its intent to cease work to the Owner.

ARTICLE 13. INFORMATION AND MATERIAL SUPPLIED BY THE OWNER.

13.01 The Owner shall furnish to the Contractor, prior to the execution of the Contract, any and all written and tangible material, including but not limited to surveys and other information concerning existing conditions on the Site.

13.02 The Owner shall also furnish, if appropriate, the legal description of the Project site, and any required survey.

ARTICLE 14. LICENSES AND PERMITS.

14.01 All licenses and permits necessary to commence and prosecute the Work to completion shall be procured and paid for by the Contractor, unless expressly provided for elsewhere in the Contract Documents.

14.03 All easements and rights-of-way will be procured and paid for by the Owner unless otherwise specifically provided within the Contract Documents.

ARTICLE 15. CEASE AND DESIST ORDER.

15.01 In the event the Contractor fails or refuses to perform the Work as required herein, the Owner may instruct the Contractor to cease and desist from performing the Work in whole or in part. Upon receipt of such instruction, the Contractor shall immediately cease and desist as instructed by the Owner and shall not proceed further until the cause for the Owner's instructions has been corrected and the Owner instructs that the Work may resume.

15.02 In the event the Owner issues such instruction to cease and desist, and in the further event the Contractor fails and refuses within seven (7) days of receipt of same to provide adequate assurance to the Owner that the cause of such instructions will be eliminated or corrected, then the Owner shall have the right, but not the obligation, to carry out the Work with its own forces, or with the forces of another contractor, and the Contractor shall be fully responsible and liable for the costs of performing such work by the Owner.

15.03 The rights set forth herein are in addition to, and without prejudice to, any other rights or remedies the Owner may have against the Contractor.

ARTICLE 16. DUTIES, OBLIGATIONS AND RESPONSIBILITIES OF THE CONTRACTOR.

16.01 The Contractor shall perform the Work in accordance with the Contract Documents.

16.02 The Contractor shall supervise the Work and bear full responsibility for any and all acts or omissions of those engaged in the Work on behalf of the Contractor.

16.03 The Contractor hereby warrants that all labor provided under this Contract shall be competent to perform the tasks undertaken, that the product of such labor shall yield only first-class results, that all material and equipment provided shall be new and of high quality, that the Work will be complete, of high quality, without defects, and in compliance with the requirements of the Contract Documents. Any Work not complying with the requirements of this Subparagraph shall constitute a breach of the Contractor's warranty.

16.04 Unless expressly provided for elsewhere in the Contract Documents, the Contractor shall obtain and pay for all required permits, fees, and licenses and shall comply with all legal requirements applicable to the Work.

16.05 The Contractor shall prepare and submit schedules and supporting documentation as required elsewhere in the Contract Documents.

16.06 Record Keeping on Site:

16.06.01 The Contractor shall keep a daily log, an updated copy of the Contract Documents, approved shop drawings and other submittals, and other documents and materials as required by the Contract Documents at the site.

16.06.02 All of these items shall be available to the Owner and the Project Consultant at all regular business hours.

16.06.03 Upon final completion of the Work, all of these items shall be finally updated and provided to the Owner and shall become the property of the Owner.

16.07 Shop Drawings And Other Submittals:

16.07.01 The Contractor shall submit for approval with reasonable promptness and in a timely manner so as to cause no delay in the Work, various submittals including shop drawings as required for the Work of the various trades.

16.07.02 These shop drawings and other submittals shall be in accordance with the requirements of the Contract Documents and shall be carefully checked in every respect and signed by the Contractor before submitting same to the Project Consultant.

16.07.03 Shop drawings and other submittals from the Contractor are not part of the Contract Documents but are documents prepared and utilized by the Contractor to coordinate the Work.

16.07.04 The Contractor shall not do any Work requiring shop drawings or other submittals unless such have been approved in writing by the Project Consultant.

16.07.05 All Work requiring approved shop drawings or other submittal shall be done in compliance with such approved documents. However, approval by the Project Consultant or the Owner shall not be evidence that Work installed pursuant thereto conforms with the requirements of the Contract Documents.

16.07.06 The Owner and the Project Consultant shall have no duty to review partial submittal or incomplete submittal except as may be provided otherwise within the Contract Documents.

16.07.07 The Contractor shall maintain a submittal log which shall include, at a minimum, the date of each submittal, the date of any resubmittal, the date of any approval or rejection, and the reason for any approval or rejection.

16.07.08 The Contractor shall have the duty to carefully review, inspect and examine any and all submittal and resubmittals before submission of same to Owner or the Project Consultant.

16.08 The Contractor shall maintain the Project site in a reasonably clean condition during performance of the Work. Upon final completion, the Contractor shall thoroughly clean the Project site of debris, trash and excess materials or equipment. In the event the Project is located at or near occupied facilities, then Owner may establish additional rules and regulations regarding condition at the Project, including but not limited to, keeping the Project and the occupied premises clean, safe and secure.

16.09 At all times, the Contractor shall permit the Owner and the Project Consultant to enter upon the Project site and to review or inspect the Work.

ARTICLE 17. SUBCONTRACTS.

17.01 The Contract Documents make no attempt to fix the scope of the Work of any Subcontractor nor the responsibilities of any such Subcontractor, it being understood that the Contractor shall fix the scope of all Work and responsibilities of the Subcontractor. Contractor shall not replace Subcontractor without good cause.

17.02 The Contractor shall continuously update information concerning Subcontractors submitted to the Owner as Post-Award Information by submitting:

17.02.01 The general form of Subcontract Agreement used by the Contractor within thirty (30) days of execution of the Construction Contract.

17.02.02 Updated listings of Subcontractors denoting changes to the list submitted as Post-Award Information within ten (10) days of said change.

17.02.03 Copies of executed Subcontractor Contracts within ten (10) days of their execution.

17.02.04 A complete accounting of all payments made to Subcontractors and the balances owed to the Subcontractors with each Application For Payment submitted by the Contractor.

17.03 All contracts with Subcontractors shall incorporate by reference the terms and conditions of this Construction Contract.

17.04 The Contractor shall cause and require to be included in all Subcontracts a provision for the benefit of the Owner binding the Subcontractors to remain bound by the Subcontracts in the event the Contractor is replaced by another contractor pursuant to the terms of the Contract Documents. The Contractor shall also include in all Subcontracts a provision requiring the Subcontractor, in the event of the Contractor's termination, to consent to the assignment of their Subcontracts to the Owner.

17.05 The Owner may at any time request from the Subcontractors, or any of them, a sworn statement of account with the Contractor and the Contractor shall cause to be included in all Subcontracts a requirement that the Subcontractors provide said sworn statement upon Owner's request.

17.06 Each Subcontractor and supplier must agree to assign all of its warranties to Owner. In addition each Subcontractor and supplier must warrant all of its Work, equipment, materials and labor to Owner in accordance with the terms and provisions of its contractual obligations to Contractor and any legal or statutory provisions that apply to its work, materials or equipment.

17.07 Owner may at its discretion require Contractor to have major sub-subcontractors or suppliers comply with the requirements of this Article 16 or other provisions of the Contract Documents.

ARTICLE 18. CONTRACTOR'S SUPERINTENDENT

18.01 Before starting the Work, Contractor shall designate an English speaking, competent, authorized representative (hereinafter Superintendent), acceptable to the Owner, to represent and act for the Contractor. The Contractor shall:

18.01.01 Inform Owner, in writing, of the name and address of such representative together with a clear definition of the scope of his authority to represent and act for Contractor and shall specify any and all limitation on such authority.

18.01.02 Keep the Owner informed of any subsequent changes in the foregoing.

18.02 The Superintendent shall be present (or be temporarily represented by a person familiar with the project work activities and schedule) at the site of the Work at all times when the Work is actually in progress.

18.04 All notices, determinations, instructions and other communications given to the Contractor's Superintendent shall be binding upon the Contractor.

18.05 The Superintendent shall maintain a daily log/report which shall include at least the following information: weather conditions; trades at site; manpower totals by trade; heavy equipment in use; activities in progress; and inspections at site. Copies of the daily entries shall be provided to the Owner once per month, or as required elsewhere in the Contract Documents.

ARTICLE 19. COOPERATION WITH OTHERS.

19.01 The Owner and other contractors and subcontractors may be working at the site during the performance of the Construction Contract, and Contractor's work may be interfered with as a result of such concurrent activities. Contractor shall fully cooperate with Owner and other contractors to avoid any delay or hindrance of the Work. Owner may require that certain facilities be used concurrently by Contractor and other parties and Contractor shall comply with such requirements.

19.02 If any part of the Contractor's work depends on proper execution or results from any work performed by the Owner or any separate contractor, the Contractor shall, prior to proceeding with the Work, promptly report to the Owner any apparent discrepancies or defects in such work that render it unsuitable for such proper execution and results. Failure of the Contractor to so report shall constitute an acceptance of the Owner or separate contractor's work as fit and proper to receive Contractor's Work, except as to defects which may subsequently become apparent in such work performed by others.

ARTICLE 20. SITE CONDITIONS.

20.01 Contractor shall have the sole responsibility to conduct reasonable inspection of the site and to satisfy itself concerning the nature and location of the Work and the general and local conditions, and particularly, but without limitation, with respect to the following: those affecting transportation, access, disposal, handling and storage of material; availability and quality of labor, water and electric power; availability and condition of roads; climatic conditions; location of underground utilities as depicted in the Contract Documents; governmental processes and requirements for obtaining permits other than issuance of the original building permits, certificates of occupancy and other regulatory/utility approvals; physical conditions at the work sites and the Project area as a whole; topography and ground surface conditions; subsurface geology, and nature and quality of surface and subsurface materials to be encountered; equipment and facilities needed preliminary to and during performance of the Construction Contract; and all other matter which can in any way affect performance of the Construction Contract, or the cost associated with such performance.

20.02 The failure of Contractor to acquaint itself with any applicable condition will not relieve it from the responsibility for properly estimating either the duration, difficulties, or the costs of successfully performing the Work.

20.03 Contractor may reasonably rely upon site documentation provided by the Owner. In the event that during the course of the Work Contractor encounters an underground utility facility that was not shown on the Contract Documents; or subsurface or concealed conditions at the Project site which differ materially from those shown on the Contract Documents and from those ordinarily encountered and generally recognized as inherent in work of the character called for in the Contract Documents; or unknown physical conditions of the Project site, of an unusual nature, which differ materially from that ordinarily encountered and generally recognized as inherent in work of the character called for in the Contract Documents, Contractor, without disturbing the conditions and before performing any work affected by such conditions, shall, within forty-eight (48) hours of their discovery, notify Owner and Project Consultant in writing of the existence of the aforesaid conditions. Project Consultant and Owner shall, within two (2) business days after receipt of Contractor's written notice, investigate the site conditions identified by Contractor. If, in the sole opinion of Project Consultant, the conditions do materially so differ and cause an increase or decrease in Contractor's cost of, or the time required for, the performance of any part of the Work, whether or not changed as a result of the conditions, Project Consultant shall recommend an equitable adjustment to the Contract Price, or the Contract Time, or both. If Owner and Contractor cannot agree on an adjustment in the Contract price or the Contract time, the adjustment shall be referred to Project Consultant for determination. Should Project Consultant determine that the conditions of the Project site are not so materially different to justify a change in the terms of the Contract, Project Consultant shall so notify Owner and Contractor in writing, stating the reasons, and such determination shall be final and binding upon the parties hereto. No request by Contractor for an equitable adjustment to the Contract under this provision shall be allowed unless Contractor has given written notice in strict accordance with the provisions of this Article. No request for an equitable adjustment or change to the Contract Price or Contract Time for differing site conditions shall be allowed if made after the date certified by Project Consultant as the date of substantial completion.

ARTICLE 21. RESPONSIBILITY FOR WORK SECURITY.

21.01 Contractor shall at all times conduct, at its expense, all operations under the Construction Contract in a manner to avoid the risk of loss, theft or damage by vandalism, sabotage or other means to any property.

21.01.01 Contractor shall promptly take such reasonable precautions as are necessary and adequate against any conditions which involve risk of a loss, theft or damage to its property.

21.01.02 Contractor shall continuously inspect all of its Work, materials, equipment and facilities to discover and determine any such conditions and shall be solely responsible for discovery, determination and correction of any such condition.

21.02 Contractor shall comply with all applicable laws and regulations.

21.02.01 Contractor shall cooperate with Owner on all security matters as set forth elsewhere in the Contract Documents and shall promptly comply with any project security requirements established by Owner.

21.02.02 These security requirements may be more stringent in the event portions of the facilities or project are occupied or otherwise being used.

21.02.03 Such compliance with these security requirements shall not relieve Contractor of its responsibility for maintaining property security for the above noted items, nor shall it be constructed as limiting in any manner Contractor's obligation to undertake reasonable action as required to establish and maintain secure conditions at the site.

21.03 Contractor shall prepare and maintain accurate reports of incidents of loss, theft or vandalism and shall provide these reports to Owner in a timely manner.

ARTICLE 22. PROTECTION OF WORK IN PROGRESS, MATERIALS AND EQUIPMENT.

22.01 Contractor shall be responsible for and shall bear any and all risks of loss or damage to Work in progress, all materials delivered to the site, and all materials and equipment involved in the Work until completion and final acceptance of the Work under this Contract.

22.02 Permanent openings for the introduction of work and materials to the structure and construction site shall be protected so that upon completion, the Work will be delivered to the Owner in proper, whole and unblemished condition.

ARTICLE 23. ADMINISTRATION OF THE CONTRACT.

23.01 The Project Consultant will provide Administration of the Contract.

23.01.01 For those projects for which the City Engineer serves as the Project Consultant, all references to the Project Consultant shall be considered to be the City Engineer.

23.01.02 In the event the Owner should find it necessary to replace the Project Consultant, the Owner shall retain a replacement and the role of the replacement shall be the same as the role of the original Project Consultant.

23.02 Unless otherwise directed by the Owner in writing, the Project Consultant will perform those duties and discharge those responsibilities allocated to the Project Consultant by the Owner.

23.03 Neither the Project Consultant nor the Owner will be responsible for construction means, methods, techniques, sequences or procedures, safety precautions and programs in connection with the Work or for the acts of omission or commission of the Contractor, its Subcontractors or their agents or employees.

23.04 The Project Consultant and Owner will each have the authority to reject Work which does not conform to the Contract Documents and to require special inspection or testing with prior approval by the Owner. Neither the Project Consultant's nor the Owner's authority to act under this Paragraph, nor any decision made by them in good faith either to exercise or not to exercise such authority, shall give rise to any duty or responsibility of the Project Consultant or the Owner to the Contractor, any Subcontractor, any of their agents or employees, or any other person performing any of the Work.

23.05 The Contractor shall forward all communications to the Project Consultant, with simultaneous copies to the Owner.

23.06 The Project Consultant will review and certify the Contractor’s Application for Payments which the Owner must subsequently approve prior to Payment of the Contractor.

23.07 The Project Consultant shall approve shop drawings for design only, the Contractor being responsible for all dimensions, quantities, etc., necessary to complete the Work in compliance with the Drawings and Specifications and other Contract Documents.

23.08 The duties, responsibilities and limitations of authority of the Project Consultant and the Owner will not be modified nor extended without written consent of the Contractor, the Project Consultant, and the Owner.

23.09 Notwithstanding anything to the Contrary in these General Conditions or any other “Contract Document” as that term is defined in the Professional Services Agreement between the City of Pompano Beach, Florida and the Project Consultant, it is not the intention nor shall any of the provisions of those documents act as a release, limitation or discharge of the obligations or responsibilities of the Project Consultant pursuant to its agreement with the Owner.

ARTICLE 24. MATERIALS.

24.01 The Contractor shall provide materials and equipment as required in the Contract Documents. No substitution will be permitted except in the instance where a material is no longer available during the progress of the Work or is deemed by the Owner to be no longer suitable or appropriate for incorporation into the Work or for obvious economic benefits accruable to the Owner.

24.01.01 Any such substitution must be approved by the Project Consultant and Owner prior to incorporation of the proposed substitution into the Work.

24.01.02 Proposed substitutions must be submitted for consideration from the Contractor to the Project Consultant and the Owner. Documentation for the proposed substitution must include, but is not limited to substantiation of the Contractor's efforts to obtain the originally specified materials including documentary evidence from the original materials' manufacturer that such materials are not available.

24.01.03 Product delivery lead times shall not serve as a basis for any substitution request except for where approved in advance by the Owner.

24.01.04 All additional costs incurred by the Owner as the result of any substitution will be the direct responsibility of and borne by the Contractor.

24.02 The Contractor shall make written request to the Project Consultant for and obtain his written approval of the use of any materials proposed for use when "approval" materials are specified or a performance type specification is utilized without mentioning any standard by name.

24.03 If, in the opinion of the Project Consultant, a specified product or equipment no longer meets the quality of the products or equipment required for the Work, Project Consultant shall request a Change Order Proposal from the Contractor for modifying the Contract to incorporate the respective changes to the Work required, the Contract amount, and the Contract Time as beneficial to the Owner.

ARTICLE 25. STORED MATERIALS.

25.01 Contractor shall, at its expense, receive, unload, store in a secure place, and deliver from storage to the construction site all materials and equipment required for the performance of the Contract.

25.01.01 Contractor is not entitled to payment for same except for those materials which in Owner's discretion are properly stored and are going to be installed or incorporated into the construction of the Project within thirty (30) days of delivery to the construction site.

25.01.02 The storage facilities and methods of storing shall meet Owner's approval and shall be in accordance with manufacturer's recommendations, or Owner will not be obligated to pay for same.

25.01.03 Materials and equipment subject to degradation by outside exposure shall be stored in a weather tight enclosure provided by Contractor at its expense.

25.01.04 Owner may at its discretion require material to be stored in an air-conditioned location.

25.02 Provided the above conditions are met, the stored materials may be included in a subsequent Application for Payment if the Contractor also complies with the following:

25.02.01 An applicable purchase order is provided listing the materials in detail and identifying the Contract Documents, by name, with verification that the total value of the purchase order amount reconciles with the corresponding application for payment stored materials line item value.

25.02.02 Evidence that proper storage security is provided.

25.02.03 The Owner is provided legal title (free of liens or encumbrances of any kind) to the material that is stored or stockpiled.

25.02.04 The Contractor and/or its Subcontractor have provided insurance for the Stored Materials against loss, damage (from whatever source), or disappearance, including loss or theft prior to incorporation into the Work. By execution of the Contract, Contractor releases Owner from any responsibility for Stored Materials and assumes all liability for and risk of loss or damage, by whatever means, including Owner's alleged negligence, regardless of whether the Owner has paid for said Stored Materials.

25.03 Once any Stored Material is paid for by Owner, it shall not be removed from the designated storage area except for incorporation into the Project or upon subsequent written approval by Owner.

25.04 No Applications for Payment shall be submitted nor payments made based on the value of materials stored at locations other than the Project, unless otherwise approved in writing by the Owner.

25.05 It is further agreed between the parties that the transfer of title and the Owner's payment for any Stored Material pursuant to the Contract Documents shall in no way relieve the Contractor of the responsibility for providing and installing such material in accordance with the requirements of the Contract Documents.

25.06 The Contractor warrants that title to all of the Work or Stored Materials covered by the Application for Payment will pass to the Owner either by incorporation in the Project or upon receipt of payment by the Contractor, whichever occurs first, free and clear of all liens, claims, security, interest or encumbrance; and that none of the Work and none of the Stored Materials covered by the Application for Payments will have been acquired by the Contractor, or by any other person performing the Work at the site or providing materials and equipment to the Project, subject to an agreement under which an interest therein or encumbrance thereon is retained by the seller or otherwise imposed by the Contractor or such person.

25.07 In the event stored materials which Owner is paying for in advance of their being installed or incorporated into the Project pursuant to this Paragraph are not installed or incorporated into the Project within thirty (30) days of when they are delivered to the site, Contractor shall not be entitled to payment for any future stored materials on this Project and the amounts previously approved for payment for said materials shall be deducted from the Contractor’s next application for payment..

ARTICLE 26. INSPECTION: REJECTION OF MATERIALS AND WORKMANSHIP.

26.01 All material and equipment provided and work performed shall be properly inspected by Contractor, at its expense, and shall at all times be subject to quality surveillance, inspections, observations or quality audit by Owner, Project Consultant and any inspectors conducting an inspection pursuant to code, law, regulations, etc.

26.01.01 Contractor shall provide safe and adequate facilities, and all samples, drawings, lists and documents necessary for such quality surveillance, observation or quality audit.

26.01.02 The Contractor shall permit and facilitate inspection of the Work by the Owner, Project Consultant, Inspectors for any governmental agency, authority, or board.

26.01.03 Owner also reserves the right to designate others such as consultants, commissioning authorities, test and balance agents, forensic specialists, etc. to conduct inspections during or subsequent to the Work as Owner in its discretion desires.

26.01.04 Owner and Project Consultant shall be afforded full and free access to the shops, factories or places of business of Contractor and its Subcontractors for such quality surveillance, observation or quality audit and to determine the status of the Work.

26.01.05 In the event the Project Consultant or Owner requires a factory inspection, the Contractor shall notify the suppliers that the material shall not be produced or fabricated without due notice to the Project Consultant and Owner and an opportunity for such inspection.

26.02 If any Work should be covered up without approval or consent of the Project Consultant or Owner, it must, if required by the Project Consultant or Owner, be uncovered for examination at the Contractor's expense.

26.03 If any material, equipment or workmanship is determined by Owner, City Engineer, Project Consultant or Inspector either during performance of the Work or on final quality surveillance, or during any applicable warranty period, to be defective or not complying with the requirements of this Construction Contract, Owner, City Engineer, Project Consultant or Inspector will notify Contractor in writing that such material, equipment or portions of the Work is rejected and Owner reserves the right to withhold payment on any such item or seek compensation from Contractor for same. Thereupon, Contractor shall, at its own expense, immediately remove, replace or correct such defective material, equipment or portions of the Work by making the same comply strictly with all requirements of the Contract Documents. The Contractor shall be responsible for the costs of any additional site observations, special inspections and/or testing, or other activities of either the Project Consultant or the Owner made necessary by the correction of such defective materials, equipment or portions of the Work.

26.04 Neither the failure to make such quality surveillance, observation or quality audit, nor to discover defective workmanship, materials, or equipment, shall prejudice the rights of Owner to correct or reject the same as hereinafter provided.

ARTICLE 27. WARRANTY.

27.01 Unless otherwise provided elsewhere in the Contract Documents, all material and equipment incorporated into any Work covered by the Contract Documents shall be new and, where not specified, of the most suitable grade of their respective kinds for their intended use, and all workmanship shall be in accordance with construction practices acceptable to Owner and Project Consultant.

27.02 Unless otherwise provided in the Contract Documents, Contractor warrants all Work, equipment, materials and workmanship to be in accordance with the Contract Documents, any and all applicable codes, proper and workmanlike, first class and free from defects for a period of twelve (12) months (unless longer guarantees or warranties are provided for elsewhere in the Contract Documents in which case the longer periods of time shall prevail) from and after Final Completion of the Work under the Contract Documents, regardless of whether the same were provided or performed by Contractor or by any Subcontractor.

27.03 Contractor’s warranty with respect to latent defects shall be in accordance with Chapter 95, Florida Statutes, and other applicable provisions of State law.

27.04 In the event of damage or injury to persons or property or other consequential or resultant damages result from Contractor's breach of any warranties, then the Contractor will be responsible for same.

ARTICLE 28. OFFICE SPACE FOR THE OWNER'S PERSONNEL.

28.01 The Contractor shall provide, at Contractor’s expense, for the duration of the Work, a suitable lockable office for any Owner designated personnel.

ARTICLE 29. PROJECT RECORD DOCUMENTS AND SURVEY.

29.01 A marked up record set of the Contract Documents and other project records as required elsewhere within the Contract Documents will be kept up to date by the Contractor on the jobsite at all times. These documents will be given to the Project Consultant at the completion of the Work as required by the Contract Documents, and properly labeled as "Project Record Documents."

29.02 In addition to the "Project Record Documents", the Contractor will cause to have prepared by a Surveyor, registered in the State of Florida, a site survey clearly representing all Work done under this Contract and updating the original survey as may have been provided by the Owner.

29.03 The Contractor shall submit Project Record Documents and Survey in the manner and format specified elsewhere in the Contract Documents.

29.04 This is a critical item and final payment will be withheld from the Contractor until "Project Record Documents" and survey are provided by the Contractor and approved by the Project Consultant.

ARTICLE 30. SALVAGE.

30.01 Any salvage resulting from clearing, grubbing, grading, draining, remodeling or altering any existing facilities on this site shall be the property of the Owner; and this material shall be piled or stacked on the site if the Owner desires this material.

30.02 If this material is not desired by the Owner, it shall be disposed of by the Contractor at his expense.

ARTICLE 31. CLAIMS BY THE CONTRACTOR.

31.01 Although Contractor acknowledges the No Damage for Delay clause set forth in Article 6 of the Agreement between Owner and Contractor, in the event the Contractor is entitled to assert any other claim against Owner for any reason, claims by the Contractor against the Owner (except for claims asserted under Article 20 which are treated as set forth therein), are subject to the following terms and conditions:

31.01.01 All Contractor claims against the Owner shall be initiated by a written claim submitted to the Owner, c/o the City Engineer, and the Project Consultant. Such claim shall be received by the Owner and the Project Consultant no later than fifteen (15) calendar days after the event, or the first appearance of the circumstances causing the claim, and same shall set forth in detail all known facts and circumstances supporting the claim and the actual damages or injuries suffered;

31.01.02 The Contractor shall continue diligently with its performance hereunder regardless of the existence of any claims submitted by the Contractor;

31.01.03 In the event the Contractor seeks to make a claim, as a condition precedent to any such claim the Contractor shall strictly comply with the notice requirements above and such claim shall be made by the Contractor before proceeding to execute any additional or changed Work. Failure of the condition precedent to occur, i.e., providing notice as required in Article 31.01.01 above, shall constitute a complete waiver by the Contractor of any claim for additional compensation or extension of time. This written notice requirement may not be waived by verbal representations or the acts of representatives of the Owner or Project Consultant;

31.01.04 In connection with any claim by the Contractor against the Owner for compensation in excess of the Contract Price, any liability of the Owner for the Contractor's cost shall be strictly limited to direct cost of labor and materials incurred by the Contractor at the jobsite and shall in no event include indirect cost, overhead, loss of profit, or consequential damages of the Contractor. The Owner shall not be liable to the Contractor for claims of third parties including, but not limited to, subcontractors, suppliers, laborers, etc.

ARTICLE 32. CHANGE ORDERS.

32.01 One or more changes to the Work within the general scope of this Contract may be ordered by the Owner by Change Order, Project Consultant's Supplementary Instructions, and Construction Change Directives.

32.02 The Contractor shall proceed with any extra Work or changes which alter the Contract by adding to, or deducting from the Contract Sum or Contract Time in strict accordance with the following terms and conditions:

32.02.01 Change Order shall mean a written order to the Contractor executed by the Owner and the Project Consultant after execution of this Contract, directing a change in the Work and may include a change in the Contract Price or the time for the Contractor's performance, or any combination thereof;

32.02.02 Any change in the Contract Price or time resulting from a Change Order shall be determined as follows:

a. By mutual agreement between the Owner and the Contractor as evidenced by (a) the change in the Contract Price or time being set forth in Change Order in accordance with Article 32.02.08 below, and (b) the execution of the Change Order; or,

b. If no mutual agreement occurs between the Owner and the Contractor, the change in the Contract Price, if any, shall be derived based upon the Cost Plus Price basis (as set forth in Article 32.02.08 below) by determining the "total actual costs" (in accordance with Article 32.02.09 below), incurred or savings achieved, resulting from revisions in the Work. Such total actual costs or savings shall include a component for direct jobsite overhead and profit but under no circumstances shall it include non-job site overhead expenses or costs or any other indirect costs or components. Any such costs or savings shall be documented in the format, and with such content and detail as the Owner or the Project Consultant requires. If agreement is not reached as to the change in time, Contractor shall be given a reasonable time based upon the scope of Work required by the change.

32.02.03 The execution of a Change Order by the Contractor shall constitute conclusive evidence of the Contractor's agreement to the ordered changes in the Work and the change in the Contract Price and the time for performance by the Contractor. The Contractor, by executing the Change Order, waives and forever releases any claim against the Owner for additional time or compensation for issues or matters relating to or arising out of or resulting from the Work included within or affected by the executed Change Order.

32.02.04 The Contractor shall notify and obtain the consent and approval of the Contractor's surety with reference to all Change Orders if such notice, consent or approval are required by the Owner, the Project Consultant, the Contractor's surety or by law. The Contractor's execution of the Change Order shall constitute the Contractor's warranty to the Owner that the surety has been notified of, and consents to, such Change Order and the surety shall be conclusively deemed to have been notified of such Change Order and to have expressly consented thereto, and that the penal sums of the performance and payment bonds furnished by Contractor and Surety are adjusted coextensively with the amount of the Change Order.

32.02.05 The Owner, without invalidating the Contract, may require the change for any reason whatsoever. All such Work shall be executed under the terms of the original Contract.

32.02.06 All change orders and adjustments shall be in writing and executed by the Contractor and Owner; otherwise, no claim for additional compensation or time will be allowed.

32.02.07 The amount of credit to be allowed by the Contractor to the Owner for a deletion or change which results in a net decrease in the Contract Sum shall be the total actual cost (as set forth in Article 32.02.09 below) saved as confirmed by the Project Consultant. The amount shall not include an amount for the overhead and profit of the Contractor which the Owner is not required to pay as a result of the deletion or decrease. When both additions and credits covering related Work or substitutions are involved in a change, the overhead and profit shall be calculated on the basis of net increase, if any, with respect to that change.

32.02.08 The value of any change ordered under the Contract for extra Work and/or any reductions in Work required, shall be determined under one or more of the following procedures before a written Change Order is issued.

a. By **UNIT PRICES** named in the Contract or subsequently agreed upon by the Owner and the Contractor, which prices shall include Contractor's overhead and profit.

b. By **LUMP SUM PRICE** agreed upon actual reasonable costs and direct job site overhead by the Owner and the Contractor, which price shall include Contractor's overhead and profit but under no circumstances shall it include non job site overhead, expenses or costs or any other indirect costs; a breakdown of the estimated costs comprising the lump sum price may be required by the Project Consultant for his review. Percentage for overhead and profit shall be determined in accordance with the method listed for COST PLUS PRICE, subparagraph (c.) below.

c. By a **COST PLUS PRICE** based on total actual costs as defined in Article 32.02.09 below, plus an added percentage, all determined as follows:

OVERHEAD AND PROFIT:

JOB SITE OVERHEAD, including supervision and the furnishing, use and maintenance of small tools and ordinary equipment incidental to and required for the work of subcontractors (whether performed by them or others) shall be considered to be just and fully compensated for, by adding an amount equal to five percent (5%) of the sum of material costs (as defined under Article 34.08.09(a) below) and labor costs (as defined under Article 34.08.09(b) below), and rentals (as defined under Article 32.08.09(c) below). There shall be no compensation for any non job site overhead, expenses or costs.

PROFIT, may then be added by the subcontractor to the above material costs and labor costs, including the JOB SITE OVERHEAD allowance, at the rate of 10% of the sum of those costs.

JOB SITE OVERHEAD, including general supervision and the furnishing, use and maintenance of small equipment incidental to and required for the Work of the General Contractor (including that of his subcontractors) shall be considered to be just and fully compensated for by adding an amount equal to ten percent (10%) of the sum of material costs (as defined under Article 32.08.09(a) below and labor costs (as defined under Article 32.08.09(b) below) and rentals (as defined under Article 32.08.09(c) below). There shall be no compensation for any non job site overhead expenses or costs.

PROFIT may then be added by the Contractor to the above material costs and labor costs, including the JOB-SITE OVERHEAD allowance, at the rate of five percent (5%) of the sum of those costs.

d. BOND ALLOWANCE, for maintaining the Performance Bond at 100% of the contract amount, a sum of one percent (l%) of the total cost of the change, (including material, labor, overhead and profit, and equipment rentals) shall be allowed on all change orders.

32.02.09 The total actual costs of materials, labor and equipment rentals may include the following only:

a. Material costs actually recorded by the Contractor and/or subcontractors as they are delivered to the site and as evidenced from originally receipted invoices, listing appropriate quantities and unit prices. Records in proper form shall be maintained and available to the Project Consultant at all times.

b. Labor costs represented by the actual wages paid to all laborers, apprentices, journeymen, and foremen involved in and necessary to completing the particular construction operations, for each day and every hour such labor teams and foremen are actually employed and on the extra Work required, including the net cost of insurance, Social Security and Workmen's Compensation. The furnishing, use and maintenance of small tools and ordinary equipment normal to the work of individual workmen in the trades will be considered part of the labor costs. Records in proper form shall be maintained and available to the Project Consultant at all times.

c. Rentals for special equipment or machinery such as power driven roller, tractors, trucks, shovels, drills, mixers, pumps, hoists, etc., required for the economical performance of the Work, at reasonable rental prices agreed upon before work commences, shall be allowed the Contractor and/or his subcontractors by the Project Consultant for each and every hour such special equipment is in use on the particular work.

32.02.10 The Contractor is obligated to proceed with the Work for a Change Order, even though there has not been an agreement reached with the Owner as to an adjustment to the Contract Price or time, and even if there is a dispute as to same. In such instances the Owner, City Engineer or Project Consultant will issue a Construction Change Directive to Contractor providing for the scope of work to be performed and the payment therefore based on 32.02.09 above. A Change Order or proposed Change Order shall not be the basis of the Contractor not performing pursuant to the Contract Documents.

32.02.11 The Contractor, Owner and Project Consultant shall administer and document the Change Order process by utilizing the documentation specified elsewhere in the Contract Documents, including a Construction Change Directive.

32.03 The Project Consultant will have authority to order minor changes in the Work not involving an adjustment to the Contract Sum or Contract Time and not inconsistent with the intent of the Contract Documents. Such changes shall be effected by written order of the Project Consultant and such changes shall be binding on the Owner and the Contractor.

32.04 The Owner has authorized the following approval thresholds for Change Orders in the Name of The City of Pompano Beach, Florida under its General Services Manual, the rules of which are incorporated below:

A. The City Manager is authorized to approve change orders up to the cumulative total of 10 percent of the original construction contract amount, not to exceed $10,000 in the aggregate.

B. When the cumulative total of all change orders on a project has exceeded the ceiling established in 32.04A above, all subsequent change orders will require prior City Commission approval, except in emergency cases as declared by the City Manager, or where the change order in question would be in the form of a credit, thereby reducing the adjusted contract amount.

C. Approval of change orders under this policy shall be for the purposes of expediting the work in progress and shall be confirmed by City Commission action at the next regular meeting of the City Commission.

ARTICLE 33. DISCOVERING AND CORRECTING DEFECTIVE OR INCOMPLETE WORK.

33.01 In the event that the Contractor covers, conceals or obscures its work in violation of this Contract or in violation of a directive from the Owner or the Project Consultant, such work shall be uncovered and displayed for the Owner's or Project Consultant's inspection upon request, and shall be reworked at no cost in time or money to the Owner.

33.02 If any of the work is covered, concealed or obscured in a manner not covered by Subparagraph (A) above, it shall, if directed by the Owner or the Project Consultant, be uncovered and displayed for the Owner's or Project Consultant's inspection. If the uncovered work conforms substantially with this Contract, the costs incurred by the Contractor to uncover and subsequently replace such work shall be borne by the Owner; otherwise, such costs shall be borne by the Contractor.

33.03 The Contractor shall, at no additional cost in money to the Owner or extension of time correct work rejected by the Owner or by the Project Consultant as defective or failing to conform to this Contract. Additionally, the Contractor shall reimburse the Owner for all testing, inspections and other expenses incurred as a result thereof.

33.04 In addition to its warranty obligations set forth elsewhere herein, the contractor shall be specifically obligated to correct any and all defective or nonconforming work for a period of twenty-four (24) months following final completion upon written direction from the Owner.

33.05 The Owner may, but shall in no event be required to, choose to accept defective or nonconforming work.

33.05.01 In such event, the Contract Price shall be reduced, at Owner's option, by the greater of (i) the reasonable costs of removing and correcting the defective or nonconforming work, or (ii) the difference between the fair market value of the Project as constructed and the fair market value of the Project had it not been constructed in such a manner as to include defective or nonconforming work.

33.05.02 If the remaining portion of the unpaid Contract Price, if any, is insufficient to compensate the Owner for the acceptance of defective or nonconforming work, the Contractor shall, upon written demand from the Owner, pay the owner such remaining compensation for accepting defective or nonconforming work.

ARTICLE 34. SAFETY, PROTECTION OF WORK AND PROPERTY.

34.01 Contractor shall be fully and solely responsible for conducting all operations under this Construction Contract at all times in such a manner as to avoid the risk of bodily harm to persons and damage to property. Contractor shall continuously and diligently inspect all Work, material and equipment to discover any conditions which might involve such risks and shall be solely responsible for discovery and correction of any such conditions.

34.02 Contractor shall instruct its personnel on the requirements of the Contractor's safety program and shall coordinate with other contractors and subcontractors on safety matters.

34.03 Contractor shall provide safety equipment and enforce the use of such equipment by its employees.

34.04 Contractor shall maintain accurate accident and injury reports and shall provide to Owner a monthly summary of injuries and man hours lost due to injuries.

34.05 Contractor shall maintain all portions of the Work in a neat, clean and sanitary condition at all times.

34.06 Contractor shall assure that all Subcontractors shall, without expense to Owner, comply with the foregoing.

34.07 Contractor shall comply with any and all rules, regulations, laws, etc., which apply to safety requirements, including but not limited to OSHA requirements.

34.08 Safety Precautions and Programs:

34.08.01 The Contractor shall be responsible for initiating, maintaining and supervising all safety precautions and programs in connection with the performance of the Contract.

34.08.02 In the event the Contractor encounters on the site material reasonably believed to be asbestos or polychlorinated biphenyl (PCB) which has not been rendered harmless, the Contractor shall immediately stop Work in the area affected and report the condition to the Owner and Project Consultant in writing. The Work in the affected area shall not thereafter be resumed except by written notice from the Owner. The Work in the affected area shall be resumed in the absence of asbestos or polychlorinated biphenyl (PCB), or when it has been rendered harmless, by written agreement of the Owner, Contractor and Project Consultant.

34.08.03 The Contractor shall not be required to perform without consent any Work relating to asbestos or polychlorinated biphenyl (PCB).

34.09 Safety of Persons and Property

34.09.01 The Contractor shall take reasonable precautions for safety of, and shall provide reasonable protection to prevent damage, injury or loss to:

a. Employees on the Work and other persons who may be affected thereby;

b. The Work and materials and equipment to be incorporated therein, whether in storage on or off the site, under care, custody or control of the Contractor or the Contractor's Subcontractors or Sub-subcontractors; and

c. Other property at the site or adjacent thereto, such as trees, shrubs, lawns, walks, pavements, roadways, structures and utilities not designated for removal, relocation or replacement in the course of construction.

34.09.02 The Contractor shall give notices and comply with applicable laws, ordinances, rules, regulations and lawful orders of public authorities bearing on safety of person or property or their protection from damage, injury or loss.

a. The Contractor and his Subcontractors shall comply with and conform in all respects to the standard set forth in the Occupational Safety and Health Act (OSHA) of 1970.

b. The Contractor shall prominently post and maintain on the jobsite:

1) OSHA 200: Log and summary of occupational injuries and illnesses.

2) OSHA 2203: Provisions of the Act poster.

34.09.03 The Contractor shall implement and maintain a continuing safety program applicable to all Contractor employees, Subcontractors, and Sub-subcontractors, to include:

a. Designating a responsible member of the Contractor's organization at the site as the Contractor's "Safety Officer" whose duty shall be the prevention of accidents, safety inspections, and accident documentation. This person shall be the Contractor's superintendent unless otherwise designated by the Contractor in writing to the Owner and the Project Consultant.

b. Holding weekly safety meetings with employees and Subcontractors.

c. Implementing OSHA Voluntary Protection Programs.

d. Ensuring the presence of an American Red Cross (or other organization acceptable to the Owner) certified Cardiopulmonary Resuscitation (CPR) and first-aid trained individual on site at all times.

e. Compliance with the Drug Free Work Place Act of 1988, the Federal Omnibus Transportation Employee Testing Act of 1991, and the certification of compliance with the same as required by the Owner in Document 00457, Drug-Free Workplace Certification.

f. Erecting and maintaining reasonable safeguards for safety and protection, including posting danger signs and other warnings against hazards, promulgating safety regulations and notifying owners and users of adjacent sites and utilities.

g. Ensuring that employees are not discriminated against or discharged for filing reasonable safety or health complaints or for otherwise exercising their rights in these regards.

34.09.04 When use of hazardous materials or equipment or unusual methods are necessary for execution of the Work, the Contractor shall exercise utmost care and carry on such activities under supervision of properly qualified personnel.

34.09.05 The Contractor shall promptly remedy damage and loss (other than damage or loss insured under property insurance required by the Contract Documents) to properly caused in whole or in part by the Contractor, a Subcontractor or a Sub-subcontractor, or anyone directly or indirectly employed by any of them, or by anyone for whose acts they may be liable and for which the Contractor is reasonable, except damage or loss attributable to acts or omissions of the Owner or Project Consultant or anyone directly or indirectly employed by either of them, or by anyone for whose acts either of them may be liable, and not attributable to the fault of negligence of the Contractor.

34.09.06 The Contractor shall not load or permit any part of the construction or site to be loaded so as to endanger its safety.

34.09.07 Building materials, Contractor's equipment and other supplies may be stored on the premises, but the placing of same shall be in substantial, watertight storage sheds upon the premises where directed in which he shall store all materials which would be damaged by weather. This shall in no manner relieve the Contractor from full responsibility for such materials. Sheds and other storage structures must be secured and anchored in a manner sufficient to withstand hurricane force winds as defined by applicable codes but not less than a 120 mile per hour wind uplift force.

34.10 **Emergencies:** In an emergency affecting safety of persons or property, the Contractor shall act, at the Contractor's discretion, to prevent threatened damage, injury or loss.

ARTICLE 35. ROYALTIES AND PATENTS.

35.01 The Contractor shall pay all royalties and license fees.

35.02 The Contractor shall be responsible for all infringement of patent rights and shall assume the defense, including payment of attorney fees and costs, of any suit brought against Contractor and/or Owner for infringement of any United States patent or for wrongful use of proprietary information of any third party.

35.03 Contractor hereby indemnifies and shall defend and hold harmless Owner and its representatives, respectively, from and against all claims, losses, costs, damages, and expenses, including attorney's fees, incurred by Owner and its representatives, respectively, as a result of or in connection with any claims or actions based upon infringement or alleged infringement of any patent, and arising out of the use of the equipment or materials provided under this Construction Contract by Contractor, or out of the process of actions employed by, or on behalf of Contractor in connection with the performances of this Construction Contract. Contractor shall, at its sole expense, promptly defend against any such claim or action unless directed otherwise by Owner or its representatives; provided that Owner or its representatives shall have notified Contractor upon becoming aware of such claims or actions, and provided further, that Contractor's aforementioned obligations shall not apply to equipment, materials, or processes furnished or specified by Owner or its representatives.

35.04 Contractor shall have the right, in order to avoid such claims or actions, to substitute at its expense non-infringing equipment, materials, or processes, or to modify such infringing equipment, materials and processes so they become non-infringing, or obtain the necessary licenses to use the infringing equipment, materials or processes, provided that such substituted and modified equipment, materials and processes shall meet all the requirements and be subject to all the provisions of the Contract Documents.

35.05 The indemnification pursuant to Florida Statute 725.06 and other Florida laws, etc., shall have a separate consideration of $1.00, receipt of which is hereby acknowledged and incorporated into the project sum. This is incorporated by reference into the Bid Documentation and Specifications if any.

ARTICLE 36. TAXES.

36.01 Contractor shall pay all taxes, levies, duties and assessments of every nature which may be applicable to any Work under this Contract.

36.02 The Contract Sum and any agreed changes thereto shall include all taxes imposed by law. Contractor shall make any and all payroll deductions as required by law.

36.03 Contractor herein indemnifies and holds the Owner harmless from any liability on account of any and all such taxes, levies, duties, assessments and deductions.

ARTICLE 37. INDEMNITY AND HOLD HARMLESS.

37.01 To the fullest extent permitted by law, the Contractor shall defend, indemnify and hold harmless the Owner, its agents and employees and each of them hereinafter collectively referred to as the Owner, from and against any and all judgments, demands, claims, causes of action, liability, expenses, losses, costs, fines, and damages (including reasonable attorney’s fees and expert’s fees) of every kind and character brought against the Owner by any person,

party or entity of any kind or nature whatsoever arising out of, incident to, relating or regarding the Contractor's performance under this Agreement, the condition of the premises, and/or the Contractor's acts of omission or commission.

37.02 Contractor, however, shall not be responsible to Owner for damages resulting out of bodily injury or damages to property which a Court of competent jurisdiction determines as being attributed to the negligence of Owner, its respective agents, servants, employees or officers.

37.03 Said indemnifications by Contractor shall be extended to include all "Subcontractors", deliverers, suppliers, furnishers of material or anyone acting for, on behalf of, or at the request of the Contractor.

37.04 Contractor recognized the broad nature of this indemnifications and hold harmless clause and voluntarily makes this covenant and expressly acknowledge the receipt of Ten ($10.00) Dollars, which payment is incorporated into the Contract Sum, and such other good and valuable consideration provided by Owner in support of this indemnification in accordance with the laws of the State of Florida.

37.05 This clause shall survive termination of this Agreement and pursuant to Florida Statute 725.06 be incorporated by reference into any and all Bid Documentation or Specifications.

ARTICLE 38. TERMINATION BY THE CONTRACTOR.

38.01 If the Owner repeatedly fails to perform its material obligations to the Contractor for a period of 30 days after receiving written notice from the Contractor of its intent to terminate hereunder, the Contractor may terminate performance under this Contract by written notice to the Owner and the Project Consultant.

38.02 In such event, the Contractor shall be entitled to recover from the Owner as though the Owner had terminated the Contractor's performance for convenience pursuant to the terms and conditions of this Contract.

ARTICLE 39. OWNER'S RIGHT TO SUSPEND CONTRACTOR'S PERFORMANCE.

39.01 The Owner shall have the right at any time to direct the Contractor to suspend its performance, or any designated part thereof, for any reason whatsoever, or without reason. If any such suspension is directed by the Owner, the Contractor shall immediately comply with same;

39.02 In the event the Owner directs a suspension of performance under this Paragraph through no fault of the Contractor, the Owner shall pay the Contractor as full compensation for such suspension the Contractor's reasonable costs, actually incurred and paid, of the following items only:

39.02.01 Demobilization and remobilization, including such costs paid to subcontractors;

39.02.02 Preserving and protecting Work in place;

39.02.03 Storage of materials or equipment purchased for the Project, including insurance thereon;

39.02.04 Performing in a later, or during a longer, time frame than that contemplated by this Contract.

ARTICLE 40. TERMINATION BY THE OWNER.

40.01 The Owner may, at the Owner's option, for any reason and at any time terminate for convenience, any work under this Contract, in whole or, from time to time, in part, in accordance with the following terms and conditions:

40.02 The Owner shall give written notice of such termination to Contractor 7 days before it becomes effective.

40.02.01 The Contractor shall incur no further obligations in connection with the Work and the Contractor shall stop work when such termination becomes effective.

40.02.02 The Contractor shall also terminate outstanding orders and subcontracts.

40.02.03 The Contractor shall settle the liabilities and claims arising out of the termination of subcontracts and orders.

40.02.04 The Owner may direct the Contractor to assign the Contractor's right, title and interest under termination orders or subcontracts to the Owner or its designee.

40.02.05 The Contractor shall transfer title and deliver to the Owner such completed or partially completed Work and materials, equipment, parts, fixtures, information and Contract rights as the Contractor has.

40.02.06 When terminated for convenience, the Contractor shall be compensated as follows:

a. The Contractor shall submit a termination claim within one year to the Owner and the Project Consultant specifying the amounts due because of the termination for convenience together with costs, pricing or other data required by the Owner or the Project Consultant. If the Contractor fails to file a termination claim with the Owner's Project Consultant within one (1) year from the effective date of termination, the Owner shall have no further obligation to the Contractor and Contractor waives any and all rights for compensation based upon the termination.

b. The Owner and the Contractor may agree to the compensation, if any, due to the Contractor hereunder;

c. Absent agreement to the amount due to the Contractor, the Owner shall pay the Contractor the following amounts:

1. Contract prices for labor, materials, equipment and other services accepted under this Contract;

2. Reasonable costs incurred in preparing to perform and in performing the terminated portion of the Work, and in terminating the Contractor's performance, plus a fair and reasonable allowance for direct jobsite overhead (and not home office or other overhead) and profit thereon (such profit shall not include anticipated profit or consequential damages); provided, however, that if it appears that the Contractor would have not profited or would have sustained a loss if the entire Contract would have been completed, no profit shall be allowed or included and the amount of compensation shall be reduced to reflect the anticipated rate of loss, if any;

3. Reasonable costs of settling and paying legitimate claims arising out of the termination of subcontractors or orders pursuant to this Paragraph. These costs shall not include amounts paid in accordance with other provisions hereof.

4. The total sum to be paid the Contractor under this Subparagraph shall not exceed the total Contract Price, as properly adjusted, reduced by the amount of payments otherwise made, and shall in no event include duplication of payment.

40.03 The Owner may terminate this Contract for cause in accordance with the following terms and conditions:

40.03.01 If the Contractor does not perform the Work, or any part thereof, in a timely manner, supply adequate labor, supervisory personnel or proper equipment or materials, or if it fails to timely discharge its obligations for labor, equipment and materials or proceeds to disobey applicable law, or otherwise commits a violation of a material provision of this Contract, then the Owner, in addition to any other rights it may have against the Contractor or others, may terminate the performance of the Contractor for cause upon seven (7) day written notice and assume possession of the Project site and of all materials and equipment at the site and may complete the Work.

40.03.02 In such case, the Contractor shall not be paid further until the Work is complete.

40.03.03 After final completion has been achieved, if any portion of the Contract Price (as it may be modified hereunder) remains after the cost to the Owner of completing the Work, including all costs and expenses of every nature incurred, has been deducted by the Owner, such remainder shall be paid to the Contractor. Otherwise, the

Contractor shall pay the Owner any and all costs, fees, damages or expenses which the Owner has paid or is obligated to pay in excess of the contract price (as it may be modified hereunder). This obligation for payment shall survive the termination of the Contract. In the event the employment of the Contractor is terminated by the Owner for cause pursuant to this Subparagraph and it is subsequently determined by a Court of competent jurisdiction that such termination was without cause, such termination shall thereupon be deemed a Termination for Convenience and the terms of Article 40.02 shall apply.

ARTICLE 41. CONTRACTOR'S INSURANCE

41.01 The Contractor shall maintain such insurance as will protect the Contractor and Owner from claims under Workmen's Compensation Acts, and from any other claims or damages for personal injury, including death and property damage, which may arise from operations under this Contract, whether such operations be by himself or by any subcontractor or anyone directly or indirectly employed by either, as more fully set forth below and in the amounts provided herein. Prior to commencement of the Work, all Certificates of Insurance executed by authorized representatives of the insurance company shall be filed with the Owner and shall be subject to its approval for accuracy of protection. In addition, the Owner may at any time require that Contractor or its insurer provide any other documentation regarding insurance to Owner including, but not limited to, the policy. The Contractor shall not commence Work under this Contract until the provisions of this paragraph have been complied with. Owner may withhold payments due to Contractor in accordance with this Contract or terminate or suspend this Contract with all costs or expenses associated with same to be paid by Contractor in the event Contractor fails to comply with any requirement in the Contract regarding insurance. In the event of cancellation of any policy, Contractor is obligated to immediately notify Owner of same and obtain policy(s) in accordance with the Contract Documents.

41.02 Contractor shall comply with any and all insurance obligation required by law, rules, regulations, etc., including but not limited to those required by State Regulations for Educational Facilities.

41.03 The Contractor will be required to provide a Certificate of Insurance indicating that Workers' Compensation has been provided for all employees in compliance with Chapter 440, Florida Statutes.

41.04 The Contractor shall procure and carry Comprehensive General Liability insurance including contractual and indemnification liability covering this Contract and Products/Completed Operations Liability Insurance covering personal injury and bodily injury in limits of not less than $1,000,000 for injury or death to any one person and not less than $2,000,000 each occurrence; and shall carry insurance against property damage in limits of not less than $1,000,000 per claimant and $2,000,000 per occurrence as a minimum coverage. The Contractor shall also procure and carry Owner's and Contractor's protective liability insurance. In the event that work to be performed hereunder by Contractor involves the removal and disposal of asbestos-related materials, Contractor shall, in addition to the foregoing coverages, also provide and carry Asbestos Liability-Occurrence form only, with $1,000,000 per occurrence, $2,000,000 aggregate. All insurance shall name the Owner as an additional insured, and shall remain in full force and effect for two (2) years following Contractor’s completion of the work.

41.05 The Contractor shall carry at no additional expense to the Owner, Builders' Risk Insurance for the perils of fire, vandalism, malicious mischief and those included in extended coverage in the amount of one hundred percent (100%) of the values at risk. Such policies shall be written to protect the Contractor and the Owner as their interest may appear.

41.06 All Contractors shall maintain automobile liability insurance against bodily injury and property damage in at least the amounts of one million dollars ($1,000,000) per claimant, one million dollars ($1,000,000) per occurrence.

41.07 The insurance coverage amounts provided for in this Section are the minimum required insurance amounts. The Owner may require additional insurance or coverage on a case-by-case basis. Any insurance or coverage amounts in addition to those provided for herein shall be specified in the Contract Documents.

41.07 The Owner is not maintaining any insurance on behalf of Contractor covering against loss or damage to the Work or to any other property of Contractor. In the event Contractor maintains insurance against physical loss

or damage to Contractor's construction equipment and tools, such insurance shall include an insurer's waiver or rights of subrogation in favor of Owner.

41.08 The requirements contained herein as to types and limits, as well as Owner's approval of insurance coverage to be maintained by Contractor, are not intended to and shall not in any manner limit or qualify the liabilities and obligations assumed by Contractor under the Contract.

41.09 The policies of such insurance in force, shall be issued by companies qualified to do business in the State of Florida and be acceptable to the Owner and shall provide that the Owner be given thirty (30) days advance written notice of the cancellation, expiration or any material change in the coverage afforded thereunder. The companies must be rated at least A-VI by AM Best or Aa3 by Moody's Investor Service. All policies must remain in effect during performance of the Work and for a period of one year after final completion.

41.10 Uninsured Claims. If any action by any person, firm or corporation is brought or threatened against the Owner or against the Contractor and the Owner for any alleged loss, damage or injury arising out of or in the consequence of the performance or nonperformance of the Contract which, in the reasonable opinion of the Owner, may not be covered by the contingent liability, public liability or property damage insurance policy, or, which together with other such actions or claims seeks a recovery in excess of the amount payable under such policies, the amount of such recovery sought or so much thereof as the Owner reasonably deems necessary, may be withheld by the Owner from any money due the Contractor. The Owner in its sole discretion may permit the Contractor to substitute other satisfactory security in lieu of the monies so withheld. If the liability of the Owner is determined by judgment or award of a court or other tribunal of competent jurisdiction, or if such recovery sought shall have been admitted by the Contractor to be valid, the Owner may pay such judgment, award of admitted recovery out of the monies retained by the Owner under the provisions of this subparagraph and return the remaining balance, if any, to the Contractor.

41.11 Adequate funds shall be retained for the insurance costs listed in the Schedule of Values attached to the Contractor’s respective Applications for Payment to account for insurance coverage renewals on multi-year projects coupled with invoices to substantiate the annual costs.

ARTICLE 42. PERFORMANCE BOND AND PAYMENT BOND

42.01 For a Project with an estimated cost of $200,000.00 or more, the Contractor shall furnish bonds covering faithful performance of the Contract and payment of obligations arising thereunder as specifically required in the Contract Documents on the date of execution of the Contract.

ARTICLE 43. RIGHT TO AUDIT PROVISIONS

43.01 Contractor's records which shall include but not be limited to accounting records, written policies and procedures, computer records, disks and software, videos, photographs, subcontract files (including proposals of successful and unsuccessful bidders), originals estimates, estimating worksheets, correspondence, change order files (including documentation covering negotiated settlements), and any other supporting evidence necessary to substantiate charges related to this contract (all the foregoing hereinafter referred to as "records") shall be open to inspection and subject to audit and/or reproduction, during normal working hours, by Owner's agent or its authorized representative to the extent necessary to adequately permit evaluation and verification of any invoices, payments or claims submitted by the contractor or any of his payees pursuant to the execution of the contract. Such records subject to examination shall also include, but not be limited to, those records necessary to evaluate and verify direct and indirect costs (including overhead allocations) as they may apply to costs associated with this contract.

43.02 For the purpose of such audits, inspections, examinations and evaluations, the Owner's agent or authorized representative shall have access to said records from the effective date of this contract, for the duration of the Work, and until 5 years after the date of final payment by Owner to Consultant pursuant to this contract.

43.03 Owner's agent or its authorized representative shall have access to the Contractor's facilities, shall have access to all necessary records, and shall be provided adequate and appropriate work space, in order to conduct audits in

compliance with this article. Owner's agent or its authorized representative shall give auditees reasonable advance notice of intended audits.

43.04 Contractor shall require all subcontractors, insurance agents, and material suppliers (payees) to comply with the provisions of this article by insertion of the requirements hereof in any written contract agreement. Failure to obtain such written contracts which include such provisions shall be reason to exclude some or all of the related payees' costs from amounts payable to the Contractor pursuant to this contract.

43.05 If an audit inspection or examination in accordance with this article, discloses overcharges (of any nature) by the Contractor to the Owner in excess of 10% percent of the total contract billings, the actual cost of the Owner's audit shall be paid by the Contractor.

ARTICLE 44. LAWS AND REGULATIONS

44.01 Contractor and its employees and representative shall at all times, comply with all applicable laws, ordinances, statutes, rules and regulations in effect at the time Work is performed pursuant to the Contract Documents.

44.02 If, during the term of this Construction Contract, there are any changed or new laws, ordinances or regulations not in existence at the time of signing this Construction Contract which become effective and which affect the cost or time of performance of the Construction Contract, Contractor shall within fifteen (15) days of the discovery of said law, ordinance or regulation, notify Owner in writing and submit detailed documentation of such effect in terms of both time and cost of performing the Construction Contract. Upon concurrence by Owner as to the effect of such changes, an adjustment in the compensation and/or time of performance may be made at Owner's discretion.

44.03 If any discrepancy or inconsistency should be discovered between the Contract Documents and any law, ordinance, regulation, order or decree, Contractor shall within fifteen (15) days of discovery of same report the same in writing to Owner who will issue such instructions as may be necessary.

ARTICLE 45. DISPUTE RESOLUTION.

45.01 The Owner and Contractor agree that, in the event of a dispute, the parties will attempt to resolve such dispute without litigation and that resolution through mediation procedures will be encouraged.

45.02 The existence of a dispute between the parties shall not be the basis of the Contractor unilaterally electing not to continue performance pursuant to the terms of the Contract Documents.

ARTICLE 46. GOVERNING LAW AND ATTORNEYS FEES.

46.01 The Construction Contract shall be governed by the laws of the State of Florida.

46.02 In the event either party institutes litigation regarding or relating to this Contract or for breach of any of its terms all litigation and appeals shall have venue in Broward County, Florida or in the U.S. District Court for the Southern District of Florida.

46.03 To the fullest extent permitted by law, Owner, Contractor, and Contractor’s Surety do hereby each waive the right to trial by jury in any action or proceeding, including any counterclaims/crossclaims/third (or more remote) party complaints which may be brought by Owner, Contractor, or Surety, jointly and/or severally, arising out of or in any way related to this Construction Contract and/or attendant suretyship including, without limiting the generality thereof, any claim for damages resulting from any act or omission of Owner, Contractor, or Surety, jointly or severally, in any way connected with this Construction Contract.

ARTICLE 47. RIGHTS AND REMEDIES.

47.01 The duties and obligations imposed by the Contract Documents and the rights and remedies available thereunder shall be in addition to and not a limitation of any duties, obligations, rights and remedies otherwise imposed or available by law.

ARTICLE 48. SUCCESSORS, ASSIGNS AND ASSIGNMENT.

48.01 The Owner and the Contractor each binds itself, its partners, successors, assigns and legal representatives to the other party in respect to all covenants, agreements and obligations contained in the Construction Contract. It is agreed that the Contractor shall not assign, transfer, convey or otherwise dispose of the contract or its right, title and interest in and to the same or any part thereof, without previous consent of the Owner and concurred to by the Sureties.

48.02 If requested by Owner the Contractor agrees to assign all Subcontracts required for performance of this Contract to the Owner upon the Owner or Project Consultant's determination that Contractor has defaulted under the Contract Documents. The Contractor shall include in all Subcontracts, equipment leases and purchase orders a provision requiring the subcontractor, equipment lessor or supplier, in the event of Contractor's default under this Contract, to consent to the assignment of their subcontracts to the Owner.

ARTICLE 49. PUBLIC RECORDS.

49.01 The City of Pompano Beach is a public agency subject to Chapter 119, Florida Statutes. The Contractor shall comply with Florida's Public Records Law. Specifically, the Contractor shall:

a. Keep and maintain public records that ordinarily and necessarily would be required by the City in order to perform the service;

b. Provide the public with access to such public records on the same terms and conditions that the City would provide the records and at a cost that does not exceed that provided in chapter 119, Fla. Stat., or as otherwise provided by law;

c. Ensure that public records that are exempt or that are confidential and exempt from public record requirements are not disclosed except as authorized by law; and

d. Meet all requirements for retaining public records and transfer to the City, at no cost, all public records in possession of the contractor upon termination of the contract and destroy any duplicate public records that are exempt or confidential and exempt. All records stored electronically must be provided to the City in a format that is compatible with the information technology systems of the agency.

49.02 The failure of Contractor to comply with the provisions set forth in this Article shall constitute a Default and Breach of this Agreement and the City shall enforce the Default in accordance with the provisions set forth in Article 40.

SUPPLEMENTARY CONDITIONS

1. RELEVANT PROJECT EXPERIENCE

Bidders shall show specific project experience as a prime contractor for a minimum of three projects within the last three years of similar or greater complexity and construction cost. Reference contact information must be furnished for all street light and underground electrical repair projects claimed as relevant experience under this requirement including: Project Name and Number, the municipality or government agency for whom the project was done, total project cost, when the project commenced and was completed, project manager with phone number, whether or not there were any changes to the contract cost or time, a complete list of warranty items that required attention after the completion of the project.

SPECIFICATIONS

Aluminum Pole Technical Product Specifications
Note: Page number 3 of 6 has been intentionally omitted

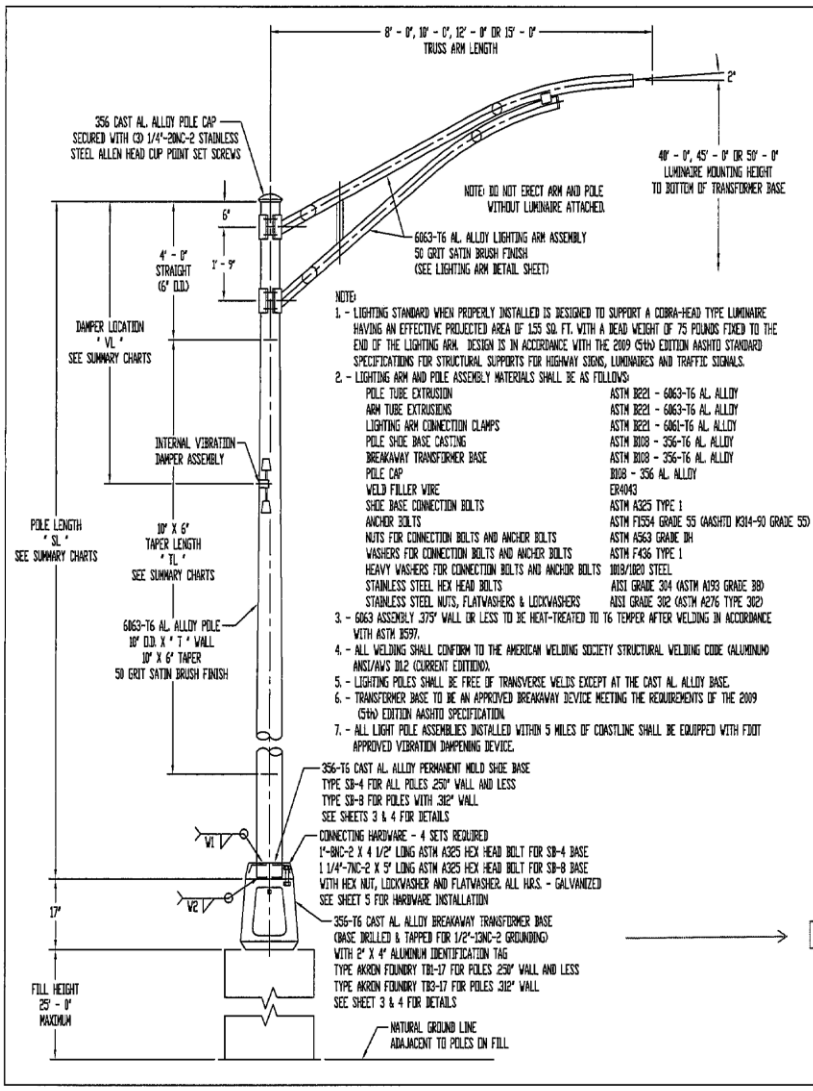

NOTE:

1. - LIGHTING STANDARD WHEN PROPERLY INSTALLED IS DESIGNED TO SUPPORT A COBRA-HEAD TYPE LUMINAIRE HAVING AN EFFECTIVE PROJECTED AREA OF 1.55 SQ. FT. WITH A DEAD WEIGHT OF 75 POUNDS FIXED TO THE END OF THE LIGHTING ARM. DESIGN IS IN ACCORDANCE WITH THE 2009 (5th) EDITION AASHTO STANDARD SPECIFICATIONS FOR STRUCTURAL SUPPORTS FOR HIGHWAY SIGNS, LUMINAIRES AND TRAFFIC SIGNALS.
2. - LIGHTING ARM AND POLE ASSEMBLY MATERIALS SHALL BE AS FOLLOWS:

POLE TUBE EXTRUSION	ASTM B221 - 6063-T6 AL. ALLOY
ARM TUBE EXTRUSIONS	ASTM B221 - 6063-T6 AL. ALLOY
LIGHTING ARM CONNECTION CLAMPS	ASTM B221 - 6061-T6 AL. ALLOY
POLE SHOE BASE CASTING	ASTM B108 - 356-T6 AL. ALLOY
BREAKAWAY TRANSFORMER BASE	ASTM B108 - 356-T6 AL. ALLOY
POLE CAP	B108 - 356 AL. ALLOY
WELD FILLER WIRE	ER4043
SHOE BASE CONNECTION BOLTS	ASTM A325 TYPE 1
ANCHOR BOLTS	ASTM F1554 GRADE 55 (AASHTO M314-90 GRADE 55)
NUTS FOR CONNECTION BOLTS AND ANCHOR BOLTS	ASTM A563 GRADE DH
WASHERS FOR CONNECTION BOLTS AND ANCHOR BOLTS	ASTM F436 TYPE 1
HEAVY WASHERS FOR CONNECTION BOLTS AND ANCHOR BOLTS	1018/1020 STEEL
STAINLESS STEEL HEX HEAD BOLTS	AISI GRADE 304 (ASTM A193 GRADE B8)
STAINLESS STEEL NUTS, FLATWASHERS & LOCKWASHERS	AISI GRADE 302 (ASTM A276 TYPE 302)

3. - 6063 ASSEMBLY .375" WALL OR LESS TO BE HEAT-TREATED TO T6 TEMPER AFTER WELDING IN ACCORDANCE WITH ASTM B597.
4. - ALL WELDING SHALL CONFORM TO THE AMERICAN WELDING SOCIETY STRUCTURAL WELDING CODE (ALUMINUM) ANSI/AWS D1.2 (CURRENT EDITION).
5. - LIGHTING POLES SHALL BE FREE OF TRANSVERSE WELDS EXCEPT AT THE CAST AL. ALLOY BASE.
6. - TRANSFORMER BASE TO BE AN APPROVED BREAKAWAY DEVICE MEETING THE REQUIREMENTS OF THE 2009 (5th) EDITION AASHTO SPECIFICATION.
7. - ALL LIGHT POLE ASSEMBLIES INSTALLED WITHIN 5 MILES OF COASTLINE SHALL BE EQUIPPED WITH FDOT APPROVED VIBRATION DAMPENING DEVICE.

110 MPH GUSTED WIND DESIGN

LUMINAIRE MOUNTING HEIGHT FROM BOTTOM OF TRANSFORMER BASE	TRUSS LIGHTING ARM LENGTH	POLE LENGTH ' SL '	TAPER LENGTH ' TL '	DAMPER LOCATION ' VL '	POLE WALL ' T '	BASE WELDS ' W1 '	BASE WELDS ' W2 '	FLAGPOLES / P&K POLE WITH TRANS. BASE CATALOG NUMBER	FLAGPOLES / P&K FULL ASSEMBLY CATALOG NUMBER
40' - 0'	8' - 0'	35' - 7'	17' - 0'	15' - 0'	.156"	1/4"	5/32"	RT10L37-04AW1X	RT10L404AW10-110
40' - 0'	10' - 0'	35' - 7'	17' - 0'	15' - 0'	.156"	1/4"	5/32"	RT10L37-04AW1X	RT10L404AW10-110
40' - 0'	12' - 0'	33' - 1'	17' - 0'	13' - 11"	.156"	1/4"	5/32"	RT10L34-04AW1X	RT10L404AW12-110
40' - 0'	15' - 0'	33' - 1'	17' - 0'	13' - 11"	.156"	1/4"	5/32"	RT10L34-04AW1X	RT10L404AW15-110
45' - 0'	8' - 0'	40' - 7'	17' - 0'	17' - 2"	.156"	1/4"	5/32"	RT10L42-04AW1X	RT10L454AW18-110
45' - 0'	10' - 0'	40' - 7'	17' - 0'	17' - 2"	.156"	1/4"	5/32"	RT10L42-04AW1X	RT10L454AW10-110
45' - 0'	12' - 0'	38' - 1'	17' - 0'	16' - 1"	.156"	1/4"	5/32"	RT10L39-04AW1X	RT10L454AW12-110
45' - 0'	15' - 0'	38' - 1'	17' - 0'	16' - 1"	.156"	1/4"	5/32"	RT10L39-04AW1X	RT10L454AW15-110
50' - 0'	8' - 0'	45' - 7'	17' - 0'	19' - 3"	.188"	1/4"	3/16"	RT10M47-04AW1X	RT10M504AW18-110
50' - 0'	10' - 0'	45' - 7'	17' - 0'	19' - 3"	.188"	1/4"	3/16"	RT10M47-04AW1X	RT10M504AW10-110
50' - 0'	12' - 0'	43' - 1'	17' - 0'	18' - 2"	.188"	1/4"	3/16"	RT10M44-04AW1X	RT10M504AW12-110
50' - 0'	15' - 0'	43' - 1'	17' - 0'	18' - 2"	.188"	1/4"	3/16"	RT10M44-04AW1X	RT10M504AW15-110

130 MPH GUSTED WIND DESIGN

LUMINAIRE MOUNTING HEIGHT FROM BOTTOM OF TRANSFORMER BASE	TRUSS LIGHTING ARM LENGTH	POLE LENGTH ' SL '	TAPER LENGTH ' TL '	DAMPER LOCATION ' VL '	POLE WALL ' T '	BASE WELDS ' W1 '	BASE WELDS ' W2 '	FLAGPOLES / P&K POLE WITH TRANS. BASE CATALOG NUMBER	FLAGPOLES / P&K FULL ASSEMBLY CATALOG NUMBER
40' - 0'	8' - 0'	35' - 7'	17' - 0'	15' - 0'	.156"	1/4"	5/32"	RT10L37-04AW1X	RT10L404AW10-130
40' - 0'	10' - 0'	35' - 7'	17' - 0'	15' - 0'	.156"	1/4"	5/32"	RT10L37-04AW1X	RT10L404AW10-130
40' - 0'	12' - 0'	33' - 1'	17' - 0'	13' - 11"	.156"	1/4"	5/32"	RT10L34-04AW1X	RT10L404AW12-130
40' - 0'	15' - 0'	33' - 1'	17' - 0'	13' - 11"	.188"	1/4"	3/16"	RT10M34-04AW1X	RT10M404AW15-130
45' - 0'	8' - 0'	40' - 7'	21' - 0'	17' - 2"	.188"	1/4"	3/16"	RT10M42-04AW1X	RT10M454AW18-130
45' - 0'	10' - 0'	40' - 7'	21' - 0'	17' - 2"	.188"	1/4"	3/16"	RT10M42-04AW1X	RT10M454AW10-130
45' - 0'	12' - 0'	38' - 1'	17' - 0'	16' - 1"	.188"	1/4"	3/16"	RT10M39-04AW1X	RT10M454AW12-130
45' - 0'	15' - 0'	38' - 1'	17' - 0'	16' - 1"	.250"	5/16"	1/4"	RT10X39-04AW1X	RT10X454AW15-130
50' - 0'	8' - 0'	45' - 7'	17' - 0'	19' - 3"	.250"	5/16"	1/4"	RT10X47-04AW1X	RT10X504AW18-130
50' - 0'	10' - 0'	45' - 7'	17' - 0'	19' - 3"	.250"	5/16"	1/4"	RT10X47-04AW1X	RT10X504AW10-130
50' - 0'	12' - 0'	43' - 1'	17' - 0'	18' - 2"	.250"	5/16"	1/4"	RT10X44-04AW1X	RT10X504AW12-130
50' - 0'	15' - 0'	43' - 1'	17' - 0'	18' - 2"	.250"	5/16"	1/4"	RT10X44-04AW1X	RT10X504AW15-130

150 MPH GUSTED WIND DESIGN

LUMINAIRE MOUNTING HEIGHT FROM BOTTOM OF TRANSFORMER BASE	TRUSS LIGHTING ARM LENGTH	POLE LENGTH ' SL '	TAPER LENGTH ' TL '	DAMPER LOCATION ' VL '	POLE WALL ' T '	BASE WELDS ' W1 '	BASE WELDS ' W2 '	FLAGPOLES / P&K POLE WITH TRANS. BASE CATALOG NUMBER	FLAGPOLES / P&K FULL ASSEMBLY CATALOG NUMBER
40' - 0'	8' - 0'	35' - 7'	21' - 0'	15' - 0'	.188"	1/4"	3/16"	RT10M37-04AW1X	RT10M404AW18-150
40' - 0'	10' - 0'	35' - 7'	21' - 0'	15' - 0'	.188"	1/4"	3/16"	RT10M37-04AW1X	RT10M404AW10-150
40' - 0'	12' - 0'	33' - 1'	17' - 0'	13' - 11"	.188"	1/4"	3/16"	RT10M34-04AW1X	RT10M404AW12-150
40' - 0'	15' - 0'	33' - 1'	17' - 0'	13' - 11"	.250"	5/16"	1/4"	RT10X34-04AW1X	RT10X404AW15-150
45' - 0'	8' - 0'	40' - 7'	17' - 0'	17' - 2"	.250"	5/16"	1/4"	RT10X42-04AW1X	RT10X454AW18-150
45' - 0'	10' - 0'	40' - 7'	17' - 0'	17' - 2"	.250"	5/16"	1/4"	RT10X42-04AW1X	RT10X454AW10-150
45' - 0'	12' - 0'	38' - 1'	21' - 0'	16' - 1"	.250"	5/16"	1/4"	RT10X39-04AW1X	RT10X454AW12-150
45' - 0'	15' - 0'	38' - 1'	21' - 0'	16' - 1"	.250"	5/16"	1/4"	RT10X39-04AW1X	RT10X454AW15-150
50' - 0'	8' - 0'	45' - 7'	17' - 0'	19' - 3"	.312"	3/8"	5/16"	RT10Y47-04AW1X	RT10Y507AW18-150
50' - 0'	10' - 0'	45' - 7'	17' - 0'	19' - 3"	.312"	3/8"	5/16"	RT10Y47-04AW1X	RT10Y507AW10-150
50' - 0'	12' - 0'	43' - 1'	21' - 0'	18' - 2"	.312"	3/8"	5/16"	RT10Y44-04AW1X	RT10Y507AW12-150
50' - 0'	15' - 0'	43' - 1'	21' - 0'	18' - 2"	.312"	3/8"	5/16"	RT10Y44-04AW1X	RT10Y507AW15-150

REVISIONS

ALT.	DESCRIPTION	CHKD.	BY	CHKD.

MATERIAL
STOCK SIZE
FINISH OR TEMPER
CUSTOMER: FLORIDA DEPT. OF TRANSPORTATION

Flagpoles, Inc. 19 Charles Brooks Rd. East Spencer, N.C. 28139 Toll Free: 800-233-0121 Fax: 704-636-3121
P&K Tubular Products Inc.

TITLE: ALUMINUM LIGHT POLE ELEVATION & NOTES
DWN. W.W.J. 10-21-10
CHK. S.K.J. 10-21-10
APV.
SCALE: NONE
DWG. NO. 10310
SHEET 1 OF 6

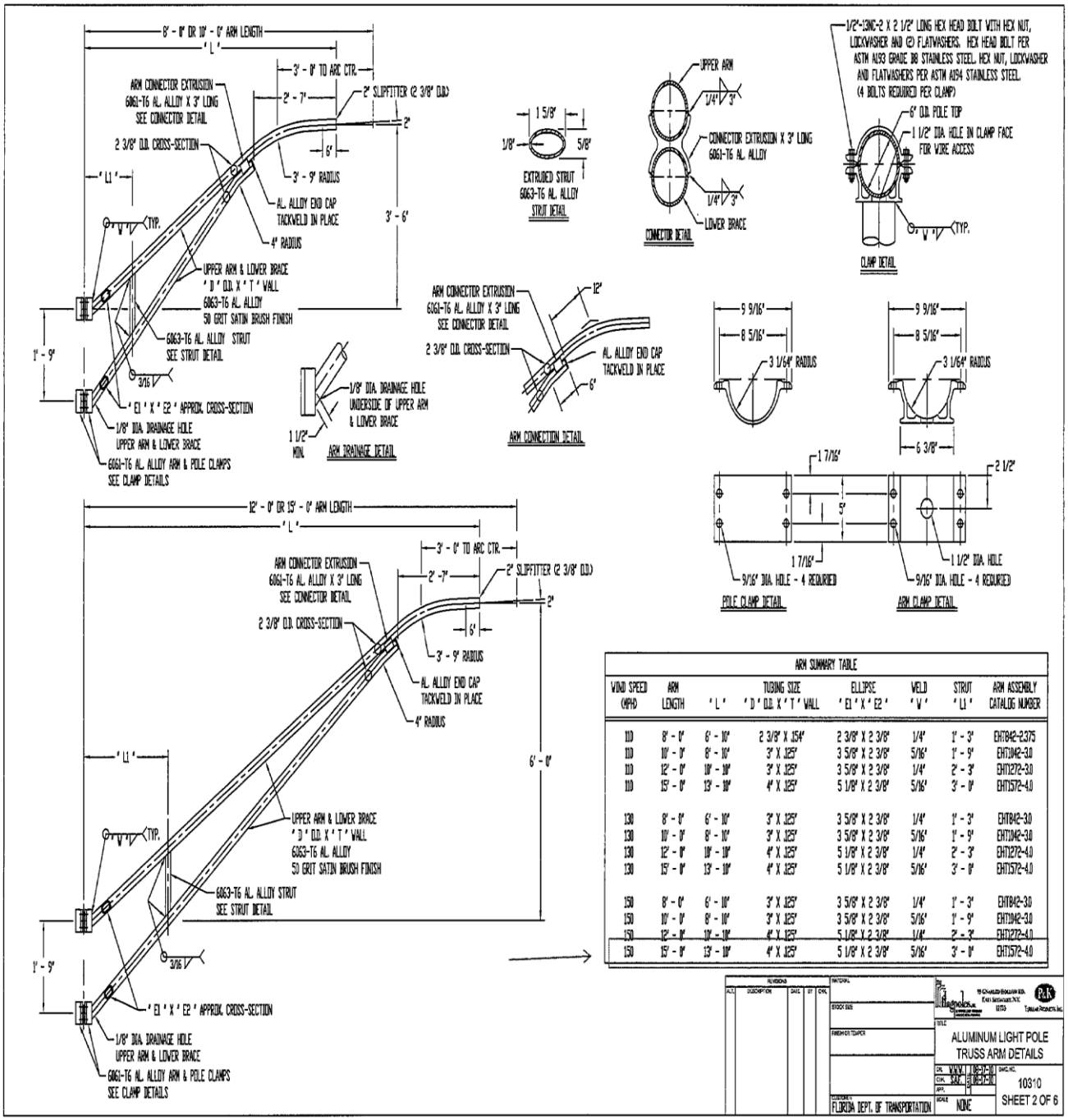
8' - 0" OR 10' - 0" ARM LENGTH
'L'
3' - 0" TO ARC CTR.
2' - 7"
2" SLIPFITTER (2 3/8" O.D.)
ARM CONNECTOR EXTRUSION
6061-T6 AL. ALLOY X 3" LONG
SEE CONNECTOR DETAIL
2 3/8" O.D. CROSS-SECTION
6"
3' - 9" RADIUS
'L1'
AL. ALLOY END CAP
TACKWELD IN PLACE
3' - 6"
4" RADIUS
TYP.
UPPER ARM & LOWER BRACE
'D' O.D. X 'T' WALL
6063-T6 AL. ALLOY
50 GRIT SATIN BRUSH FINISH
6063-T6 AL. ALLOY STRUT
SEE STRUT DETAIL
1' - 9"
3/16
'E1' X 'E2' APPROX. CROSS-SECTION
1/8" DIA. DRAINAGE HOLE
UPPER ARM & LOWER BRACE
6061-T6 AL. ALLOY ARM & POLE CLAMPS
SEE CLAMP DETAILS
1/8" DIA. DRAINAGE HOLE
UNDERSIDE OF UPPER ARM
& LOWER BRACE
1 1/2"
MIN.
ARM DRAINAGE DETAIL
1 5/8"
1/8"
5/8"
EXTRUDED STRUT
6063-T6 AL. ALLOY
STRUT DETAIL
UPPER ARM
1/4" 3"
CONNECTOR EXTRUSION X 3" LONG
6061-T6 AL. ALLOY
LOWER BRACE
CONNECTOR DETAIL
1/2"-13NC-2 X 2 1/2" LONG HEX HEAD BOLT WITH HEX NUT,
LOCKWASHER AND (2) FLATWASHERS. HEX HEAD BOLT PER
ASTM A193 GRADE B8 STAINLESS STEEL. HEX NUT, LOCKWASHER
AND FLATWASHERS PER ASTM A194 STAINLESS STEEL.
(4 BOLTS REQUIRED PER CLAMP)
6" O.D. POLE TOP
1 1/2" DIA. HOLE IN CLAMP FACE
FOR WIRE ACCESS
CLAMP DETAIL
ARM CONNECTOR EXTRUSION
6061-T6 AL. ALLOY X 3" LONG
SEE CONNECTOR DETAIL
12"
2 3/8" O.D. CROSS-SECTION
AL. ALLOY END CAP
TACKWELD IN PLACE
6"
ARM CONNECTION DETAIL
9 9/16"
8 5/16"
3 1/64" RADIUS
6 3/8"
1 7/16"
2 1/2"
5"
9/16" DIA. HOLE - 4 REQUIRED
1 1/2" DIA. HOLE
POLE CLAMP DETAIL
ARM CLAMP DETAIL
12' - 0" OR 15' - 0" ARM LENGTH
6' - 0"
ARM SUMMARY TABLE
WIND SPEED (MPH) | ARM LENGTH | TUBING SIZE 'L' | 'D' O.D. X 'T' WALL | ELLIPSE 'E1' X 'E2' | WELD 'W' | STRUT 'L1' | ARM ASSEMBLY CATALOG NUMBER
110 | 8' - 0" | 6' - 10" | 2 3/8" X .154" | 2 3/8" X 2 3/8" | 1/4" | 1' - 3" | EHT842-2.375
110 | 10' - 0" | 8' - 10" | 3" X .125" | 3 5/8" X 2 3/8" | 5/16" | 1' - 9" | EHT1042-3.0
110 | 12' - 0" | 10' - 10" | 3" X .125" | 3 5/8" X 2 3/8" | 1/4" | 2' - 3" | EHT1272-3.0
110 | 15' - 0" | 13' - 10" | 4" X .125" | 5 1/8" X 2 3/8" | 5/16" | 3' - 0" | EHT1572-4.0
130 | 8' - 0" | 6' - 10" | 3" X .125" | 3 5/8" X 2 3/8" | 1/4" | 1' - 3" | EHT842-3.0
130 | 10' - 0" | 8' - 10" | 3" X .125" | 3 5/8" X 2 3/8" | 5/16" | 1' - 9" | EHT1042-3.0
130 | 12' - 0" | 10' - 10" | 4" X .125" | 5 1/8" X 2 3/8" | 1/4" | 2' - 3" | EHT1272-4.0
130 | 15' - 0" | 13' - 10" | 4" X .125" | 5 1/8" X 2 3/8" | 5/16" | 3' - 0" | EHT1572-4.0
150 | 8' - 0" | 6' - 10" | 3" X .125" | 3 5/8" X 2 3/8" | 1/4" | 1' - 3" | EHT842-3.0
150 | 10' - 0" | 8' - 10" | 3" X .125" | 3 5/8" X 2 3/8" | 5/16" | 1' - 9" | EHT1042-3.0
150 | 12' - 0" | 10' - 10" | 4" X .125" | 5 1/8" X 2 3/8" | 1/4" | 2' - 3" | EHT1272-4.0
150 | 15' - 0" | 13' - 10" | 4" X .125" | 5 1/8" X 2 3/8" | 5/16" | 3' - 0" | EHT1572-4.0
REVISIONS
FLORIDA DEPT. OF TRANSPORTATION
ALUMINUM LIGHT POLE
TRUSS ARM DETAILS
10310
SHEET 2 OF 6
NONE

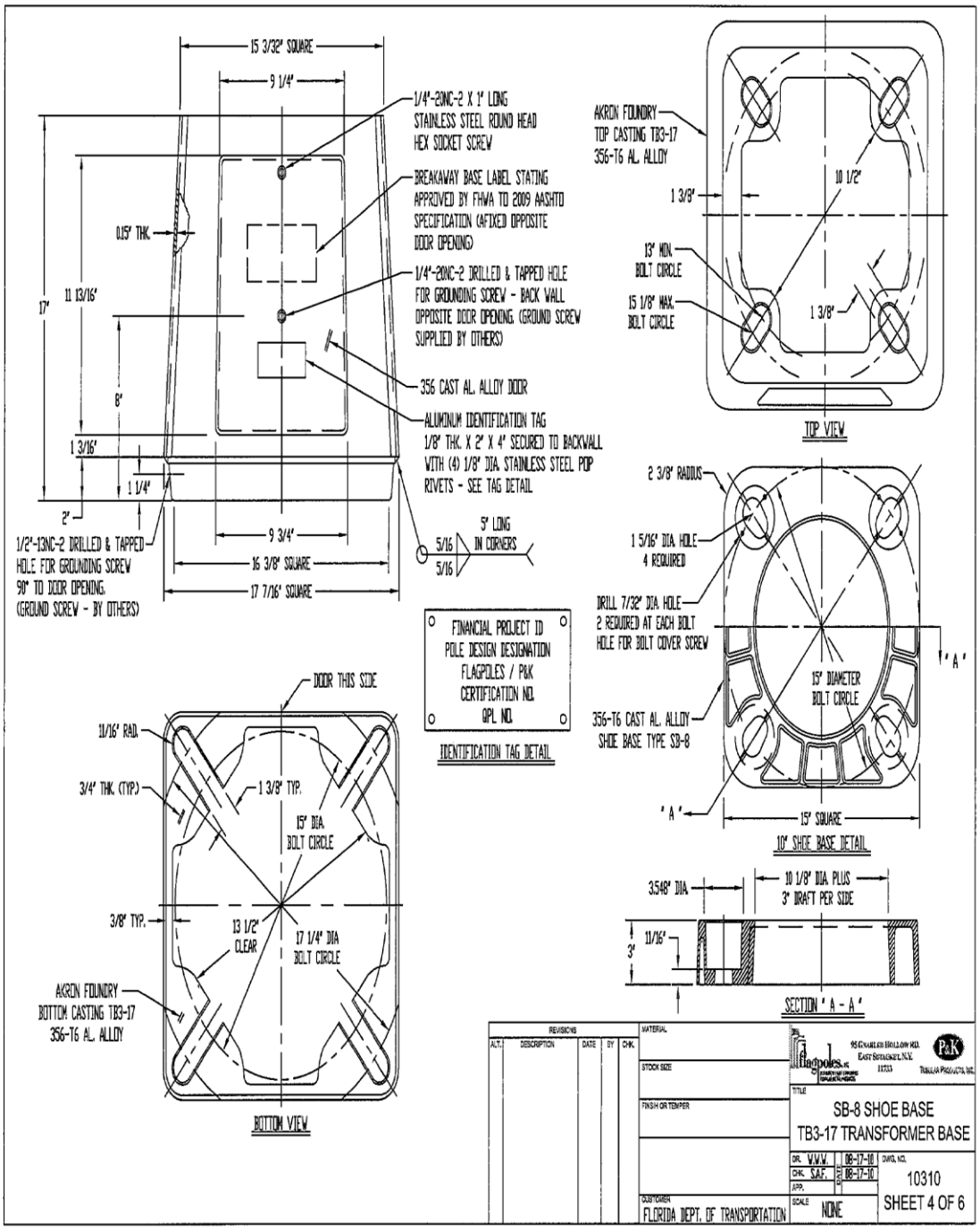
15 3/32" SQUARE
9 1/4"
1/4"-20NC-2 X 1" LONG STAINLESS STEEL ROUND HEAD HEX SOCKET SCREW
BREAKAWAY BASE LABEL STATING APPROVED BY FHWA TO 2009 AASHTO SPECIFICATION (AFIXED) OPPOSITE DOOR OPENING)
1/4"-20NC-2 DRILLED & TAPPED HOLE FOR GROUNDING SCREW - BACK WALL OPPOSITE DOOR OPENING. (GROUND SCREW SUPPLIED BY OTHERS)
356 CAST AL. ALLOY DOOR
ALUMINUM IDENTIFICATION TAG 1/8" THK. X 2" X 4" SECURED TO BACKWALL WITH (4) 1/8" DIA. STAINLESS STEEL POP RIVETS - SEE TAG DETAIL
0.15" THK.
17"
11 13/16"
8"
1 3/16"
1 1/4"
2"
1/2"-13NC-2 DRILLED & TAPPED HOLE FOR GROUNDING SCREW 90° TO DOOR OPENING. (GROUND SCREW - BY OTHERS)
9 3/4"
16 3/8" SQUARE
17 7/16" SQUARE
5/16
5/16
5" LONG IN CORNERS
FINANCIAL PROJECT ID
POLE DESIGN DESIGNATION
FLAGPOLES / P&K
CERTIFICATION NO.
OPL NO.
IDENTIFICATION TAG DETAIL
AKRON FOUNDRY TOP CASTING TB3-17 356-T6 AL. ALLOY
10 1/2"
1 3/8"
13" MIN. BOLT CIRCLE
15 1/8" MAX. BOLT CIRCLE
1 3/8"
TOP VIEW
2 3/8" RADIUS
1 5/16" DIA HOLE 4 REQUIRED
DRILL 7/32" DIA HOLE 2 REQUIRED AT EACH BOLT HOLE FOR BOLT COVER SCREW
15" DIAMETER BOLT CIRCLE
"A"
356-T6 CAST AL. ALLOY SHOE BASE TYPE SB-8
"A"
15" SQUARE
10" SHOE BASE DETAIL
DOOR THIS SIDE
11/16" RAD.
3/4" THK. (TYP.)
1 3/8" TYP.
15" DIA. BOLT CIRCLE
3/8" TYP.
13 1/2" CLEAR
17 1/4" DIA BOLT CIRCLE
AKRON FOUNDRY BOTTOM CASTING TB3-17 356-T6 AL. ALLOY
BOTTOM VIEW
3.548" DIA
10 1/8" DIA PLUS 3° DRAFT PER SIDE
11/16"
3"
SECTION "A - A"
REVISIONS
ALT. DESCRIPTION DATE BY CHK.
MATERIAL
STOCK SIZE
FINISH OR TEMPER
CUSTOMER
FLORIDA DEPT. OF TRANSPORTATION
95 CHARLES HOLLOW RD. EAST SETAUKET, N.Y. 11733
P&K
TITLE
SB-8 SHOE BASE
TB3-17 TRANSFORMER BASE
DR. W.W.W. 08-17-10
CHK. S.A.F. 08-17-10
APP.
SCALE NONE
DWG. NO. 10310
SHEET 4 OF 6

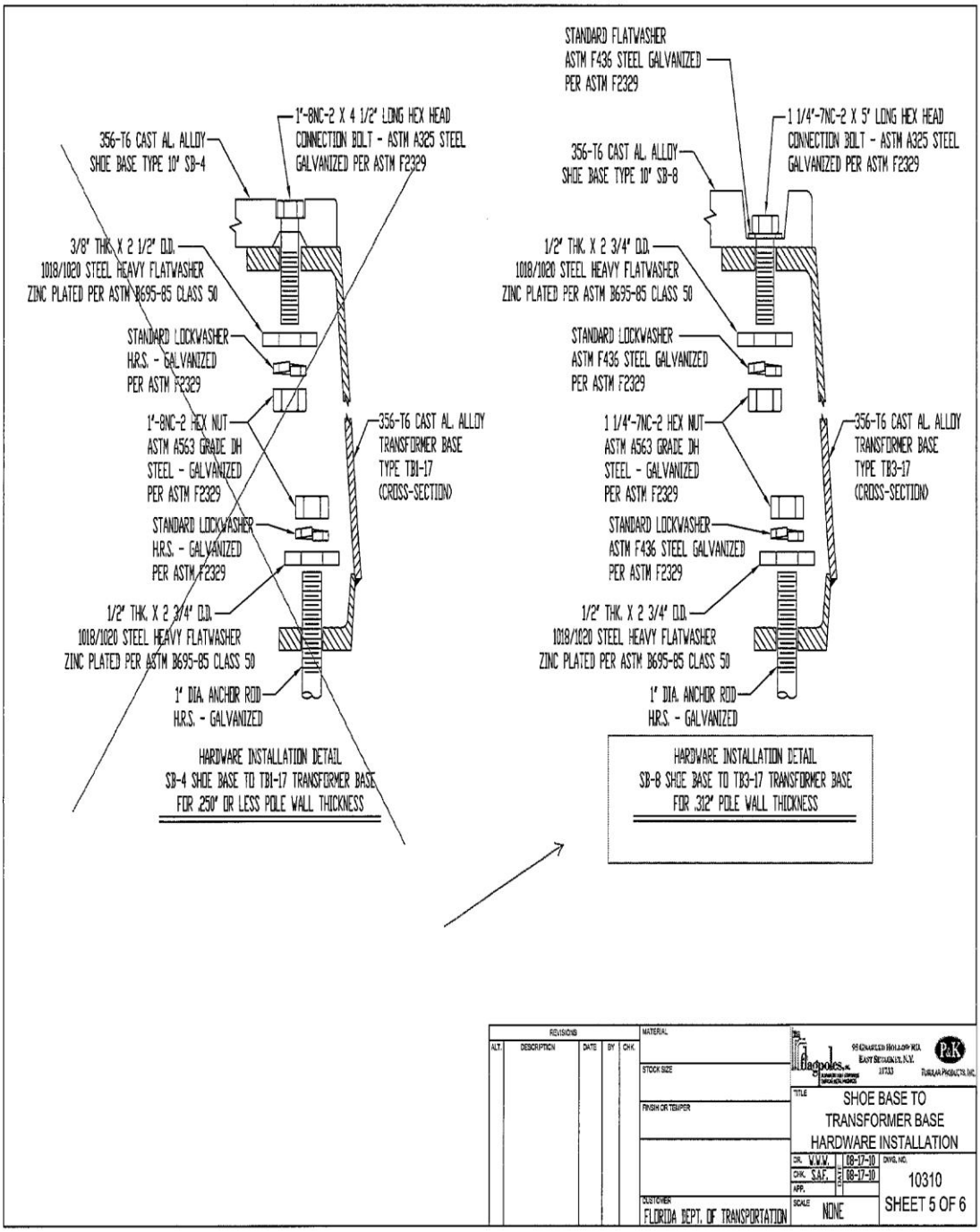
356-T6 CAST AL. ALLOY
SHOE BASE TYPE 10" SB-4
1"-8NC-2 X 4 1/2" LONG HEX HEAD
CONNECTION BOLT - ASTM A325 STEEL
GALVANIZED PER ASTM F2329
3/8" THK. X 2 1/2" O.D.
1018/1020 STEEL HEAVY FLATWASHER
ZINC PLATED PER ASTM B695-85 CLASS 50
STANDARD LOCKWASHER
H.R.S. - GALVANIZED
PER ASTM F2329
1"-8NC-2 HEX NUT
ASTM A563 GRADE DH
STEEL - GALVANIZED
PER ASTM F2329
356-T6 CAST AL. ALLOY
TRANSFORMER BASE
TYPE TB1-17
(CROSS-SECTION)
STANDARD LOCKWASHER
H.R.S. - GALVANIZED
PER ASTM F2329
1/2" THK. X 2 3/4" O.D.
1018/1020 STEEL HEAVY FLATWASHER
ZINC PLATED PER ASTM B695-85 CLASS 50
1" DIA. ANCHOR ROD
H.R.S. - GALVANIZED
HARDWARE INSTALLATION DETAIL
SB-4 SHOE BASE TO TB1-17 TRANSFORMER BASE
FOR .250" OR LESS POLE WALL THICKNESS
STANDARD FLATWASHER
ASTM F436 STEEL GALVANIZED
PER ASTM F2329
356-T6 CAST AL. ALLOY
SHOE BASE TYPE 10" SB-8
1 1/4"-7NC-2 X 5" LONG HEX HEAD
CONNECTION BOLT - ASTM A325 STEEL
GALVANIZED PER ASTM F2329
1/2" THK. X 2 3/4" O.D.
1018/1020 STEEL HEAVY FLATWASHER
ZINC PLATED PER ASTM B695-85 CLASS 50
STANDARD LOCKWASHER
ASTM F436 STEEL GALVANIZED
PER ASTM F2329
1 1/4"-7NC-2 HEX NUT
ASTM A563 GRADE DH
STEEL - GALVANIZED
PER ASTM F2329
356-T6 CAST AL. ALLOY
TRANSFORMER BASE
TYPE TB3-17
(CROSS-SECTION)
STANDARD LOCKWASHER
ASTM F436 STEEL GALVANIZED
PER ASTM F2329
1/2" THK. X 2 3/4" O.D.
1018/1020 STEEL HEAVY FLATWASHER
ZINC PLATED PER ASTM B695-85 CLASS 50
1" DIA. ANCHOR ROD
H.R.S. - GALVANIZED
HARDWARE INSTALLATION DETAIL
SB-8 SHOE BASE TO TB3-17 TRANSFORMER BASE
FOR .312" POLE WALL THICKNESS
REVISIONS
ALT. DESCRIPTION DATE BY CHK.
MATERIAL
STOCK SIZE
FINISH OR TEMPER
CUSTOMER
FLORIDA DEPT. OF TRANSPORTATION
95 CHARLES HOLLOW RD.
EAST STROUDSBURG, N.Y.
18333
P&K
TURNER PRODUCTS, INC.
TITLE
SHOE BASE TO
TRANSFORMER BASE
HARDWARE INSTALLATION
DR. W.W.W. 08-17-10
CHK. S.A.F. 08-17-10
APP.
DWG. NO.
10310
SCALE
NONE
SHEET 5 OF 6

1" DIA. X 48" LONG ANCHOR ROD WITH (3) HEX NUTS, (1) LOCKWASHER, AND (1) 1/2" THK. FLATWASHER (4 SETS OF EACH REQUIRED). ANCHOR ROD TO BE IN ACCORDANCE WITH AASHTO M314-90 GRADE 55 WITH 55,000 PSI MIN. YIELD STRENGTH. ROD TO BE GALVANIZED FOR FULL LENGTH PER AASHTO M232 CLASS C (ASTM F2329).

NOTE: FOUNDATION DESIGN AND DETAILS ARE PER 2010 FDOT INDEX 17515 SHEET 4 OF 8. FLAGPOLES/P&K ACCEPTS NO LIABILITY FOR FOUNDATION DESIGN, CONSTRUCTION OR EMBEDMENT DEPTH.

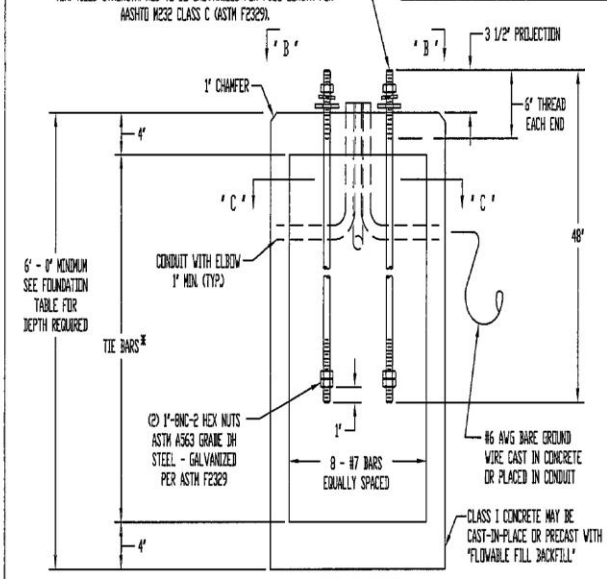

FOUNDATION DETAIL

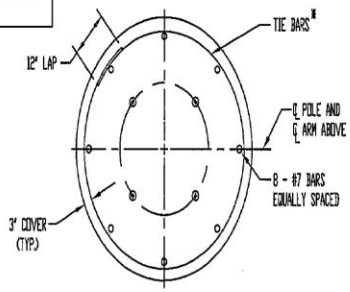

SECTION C - C

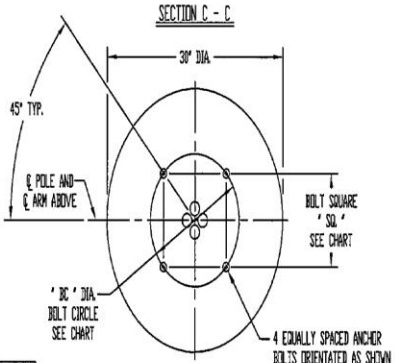

VIEW B - B

*1. SHOP WELD ASSEMBLIES OF FOUNDATION STIRRUP REINFORCING BARS ARE PERMITTED IN REINFORCED CONCRETE FOUNDATION PROVIDED THAT:
   A. THE REINFORCING BARS CONFORM TO ASTM SPECIFICATION A706/A706M.
   B. THE HOLDING WIRES CONFORM TO ASTM SPECIFICATION A82 OR A496.
   C. THE SHOP WELDING IS PERFORMED BY MACHINES UNDER A CONTINUOUS, CONTROLLED PROCESS, APPROVED BY THE ENGINEER.
   D. QUALITY CONTROL TESTS ARE PERFORMED ON SHOP WELDED SPECIMENS AND THE TEST RESULTS ARE AVAILABLE, UPON REQUEST, TO THE ENGINEER.
2. #4 TIE BARS @ 12" CENTERS (MAX) OR 100 (OR W10) SPIRAL @ 6" PITCH, 3 FLAT TURNS TOP AND 1 FLAT TURN BOTTOM.

FOUNDATION TABLE

WIND SPEED (MPH)	DESIGN MOUNTING HEIGHT (FT)	TOTAL DEPTH (FT)**
110	40	7
110	45 & 50	8
130	40 & 45	8
130	50	9
150	40 & 45	9
150	50	10

POLE WALL 'T'	TRANSFORMER BASE	BOLT CIRCLE 'BC'	BOLT SQUARE 'SQ'
.250" OR LESS	TB1-17	15"	10 5/8"
.312"	TB3-17	17"	12"

**DEPTHS SHOWN IN TABLE ARE FOR GRADES FLATTER THAN 3:4, FOR GRADES UP TO 1:2 ADD 2' - 6' TO FOUNDATION DEPTHS SHOWN IN TABLE

FOUNDATION NOTES:
THE FOUNDATIONS FOR STANDARD ROADWAY ALUMINUM LIGHTING POLES ARE PRE-DESIGNED AND ARE BASED UPON THE FOLLOWING CONSERVATIVE SOIL CRITERIA WHICH COVERS THE MAJORITY OF SOIL TYPES FOUND IN FLORIDA:
CLASSIFICATION = COHESIONLESS (FINE SAND)
FRICTION ANGLE = 30 DEGREES (30°)
UNIT WEIGHT = 50 LBS/CU. FT. (ASSUMED SATURATED)
ONLY IN CASES WHERE THE DESIGNER CONSIDERS THE SOIL TYPES AT THE SPECIFIC SITE LOCATION TO BE OF LESSER STRENGTH PROPERTIES SHOULD AN ANALYSIS BE REQUIRED. AUGER BORINGS, SPT BORINGS OR CPT SOUNDINGS MAY BE UTILIZED AS NEEDED TO VERIFY THE ASSUMED SOIL PROPERTIES, AND AT RELATIVELY UNIFORM SITES, A SINGLE BORING OR SOUNDING MAY COVER SEVERAL FOUNDATIONS. BORINGS IN THE AREA THAT WERE PERFORMED FOR OTHER PURPOSES MAY BE USED TO CONFIRM THE ASSUMED SOIL PROPERTIES.

FOUNDATION CONCRETE SHALL BE CLASS I WITH A MINIMUM 28 DAY COMPRESSIVE STRENGTH (f'c) OF 3000 PSI FOR ALL ENVIRONMENTAL CLASSIFICATIONS.
REINFORCING STEEL SHALL BE PER ASTM A615-96 GRADE 60.

REVISIONS				
ALT.	DESCRIPTION	DATE	BY	CHK.

MATERIAL
STOCK SIZE
FINISH OR TEMPER
CUSTOMER: FLORIDA DEPT. OF TRANSPORTATION

Flagpoles, Inc. — 95 Charles Hollow Rd., East Stroudsburg, N.Y. 18301 — P&K Tubular Products, Inc.

TITLE: ALUMINUM LIGHT POLE FOUNDATION DETAILS

DR. W.W.W. 04-14-10
CHK. S.A.F. 04-14-10
APP.
SCALE: NONE
DWG. NO. 10310
SHEET 6 OF 6

M-400A POWR/DOOR® LUMINAIRE

APPLICATIONS
- For street and parking lot lighting

SPECIFICATION FEATURES
- Powr/Module ballast assembly
- Filtered optics
- Standardized reflector
- Universal two or four-bolt slipfitter
- Die-cast aluminum housing with polyester powder gray paint finish
- "Dead back" tunnel type, FRP terminal board
- 2 in. pipe mounting only with MDRA
- Adjustable mogul base socket (house side) – E39 standard
- ALGLAS® finish on reflector
- No-tool PE receptacle
- Plug-in ignitor available
- External paddle type stainless steel bail latch
- UL/CUL listed unit available—See Options

PART # MDRL40S5M12RMS31
400 WATT, 480 VOLT, HIGH PRESSURE SODIUM, LIGHT FIXTURE

ORDERING NUMBER LOGIC

MDRL	40	S	1	A	2	1	R	MS3	1	F
PRODUCT IDENT	WATTAGE	LIGHT SOURCE	VOLTAGE	BALLAST TYPE	PE FUNCTION	IGNITOR MOUNTING	LENS TYPE (PRISMATIC) REFRACTOR	IES DISTRIBUTION TYPE	FILTER	OPTIONS
XXXX	XX	X	X	X	X	X	X	XXX	X	XXX
MDRA = M-400A 4-Bolt Slipfitter MDRL = M-400A 2-Bolt Slipfitter	10 = 100 15 = 150 (55V) 17 = 175 20 = 200 24 = 250/400 25 = 250 31 = 310 32 = 320 35 = 350 40 = 400 NOTE: Dual wattage connected for lower wattage only	E = Energy Act Compliant Pulse MH (EPMH) S = HPS P = PMH Standard: Lamp not included.	60Hz 0 = 120/208/240/277 Multivolt 1 = 120 2 = 208 3 = 240 4 = 277 5 = 480 7 = 120X240 8 = 240V Ballast 120V PE Receptacle not reconnectable D = 347 F = 120X347 T = 220 W = 230 50Hz 6 = 220 R = 230 Y = 240 NOTE: Dual voltage connected for lower voltage	See Ballast Selection Table A = Autoreg H = HPF Reactor or Lag M = Mag-reg N = NPF Reactor or Lag P = CWI with Grounded Socket Shell	1 = None 2 = PE Receptacle NOTE: Receptacle connected same voltage as unit except as noted. Order PE Control separately.	1 = Non Plug-in /None 2 = Plug-in base and Ignitor	See Photometric Selection Table R = Prismatic Glass Refractor P = Lexan *250W HPS Maximum Prismatic Refractor	See Photometric Selection Table S = Short M = Medium S = Semi-cutoff C = Cutoff 2 = Type II 3 = Type III	1 = Fiber gasket 2 = Charcoal with elastomer gasket	F = Fusing (Not available with multivolt or dual voltage) J = Line Surge Protector, Expulsion Type N = Meets proposed ANSI C136.31 requirements for Bridge and Underpass Vibration U = UL Listed Glass Lens only and (60Hz only)

PHOTOMETRIC SELECTION TABLE

GLASS PRISMATIC REFRACTOR
All light sources are clear unless otherwise indicated.

Wattage	Light Source	IES Distribution Type Photometric Curve Number 35–45xxxx					
		Semi-Cutoff		Cutoff			
		MS2	MS3	MC2	MC3	SC2	SC3
150 (55V)	HPS	0390	0389	N/A	0388	N/A	N/A
200-400	HPS	1007	1008	1009	1010	N/A	1011
175, 250, 320, 350, 400	EPMH	0346	0344	N/A	N/A	N/A	0345
	EPMH	0279	0278	N/A	N/A	N/A	N/A

NOTE: N/A = Not Available
PMH—Contact Factory

R-12/2008

GE Lighting Solutions • 1-888-MY-GE-LED • www.gelightingsolutions.com
1-888-69-43-533

M-400A POWR/DOOR® LUMINAIRE WITH 4 BOLT SLIPFITTER

FIXTURE DIMENSIONS

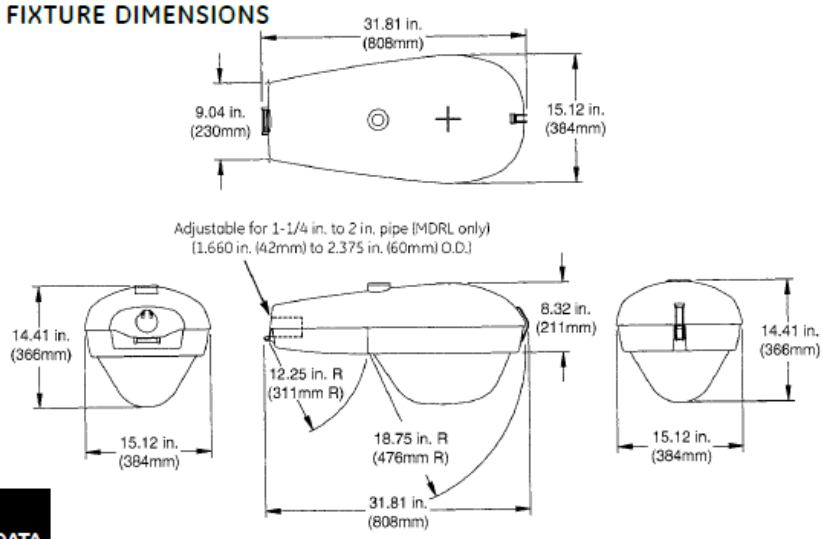

DATA

Approximate Net Weight	30-39 lbs	15-18 kgs
Effective Projected Area	1.4 sq. ft. max	.13 sq. M max
Suggested Mounting Height	30-50 ft.	9-15 M

REFERENCES

See Page R-48 for start of Accessories.
See Page R-52 for Explanation of Options and Other Terms Used.
See Pole and Bracket Section Page P-2 for pole selection.

BALLAST SELECTION TABLE

			Ballast Type/Voltage											
			60Hz									50Hz		
Wattage	Light Source	Multi-volt	120	208	240	277	480	120X 240	347, 120X347	240/120 PE R	220	230	220	230	240
150 (S5V)	HPS	H,N,A	G,H,M,N	G,M	G,M	G,M	G,M	G,H,M,N	G*,H,M*,N		G,M	N/A	N/A	N/A	N/A
N/A															
200	HPS	A,M,P	A,G,H,M,N,P	A,G,H,M,N,P	A,G,H,M,N,P	A,G,M,P	A,G,M,P	A,G,M,P	N/A	A,G,H,M,N	N/A	H	N/A	N/A	N/A
250	HPS	A,M,P	A,G,H,M,N,P	A,G,H,M,N,P	A,G,H,M,N,P	A,G,L,M,P	A,G,M,P	A,G,M,P	A,M,P	A,G,H,M,N	A,H	H	A,H,M,N	H	M
250/400	HPS	A	A	A	A	A	A	N/A	N/A	N/A	N/A	N/A	N/A	N/A	N/A
310	HPS	A,M	A,G,M	A,G,H,M,N	A,G,H,M,N	A,G,M	A,G,M	A,G,M	N/A	A,G,H,M,N	N/A	H	N/A	N/A	N/A
400	HPS	A,M	A,G,M	A,G,H,M,N	A,G,H,M,N	A,G,M	A,G,M	A,G,M	A,G,M	A,G,H,M,N	H,A,N	H	A,H,M,N	N/A	A,H,M
175	EPMH	A	A	A	A	A	A	A	N/A	A	N/A	N/A	N/A	N/A	N/A
250	EPMH	A	A	A	A	A	A	A	N/A	A	N/A	N/A	N/A	N/A	N/A
320	EPMH	A	A	A	A	A	N/A	A	N/A	A	N/A	N/A	N/A	N/A	N/A
350	EPMH	A	A	A	A	A	N/A	A	N/A	A	N/A	N/A	N/A	N/A	N/A
400	EPMH	A	A	A	A	A	A	A	N/A	A	N/A	N/A	N/A	N/A	N/A

NOTE: N/A = Not Available
*Not available in 120X347 volt
C/F = Contact factory

MDRA — SUGGESTED CATALOG ORDERING NUMBERS

Catalog Number	Wattage	Light Source	Voltage (60 Hz)	Ballast Type	Refractor Type	Photometric Distribution
MDRA25S0A22RMS31	250	HPS	Multivolt	Auto-Regulator	Glass	MS3
MDRA40S0A22RMS31	400	HPS	Multivolt	Auto-Regulator	Glass	MS3

All GE suggested catalog ordering numbers come with PE receptacle. PE control must be ordered separately. Order and install SCCL-PECTL if no PE is desired.

Multivolt ballasts can be for either 120, 208, 240, or 277 volt incoming power supply.

SECTION 01720

PROJECT RECORD DOCUMENTS

PART 1 GENERAL

1.01 THE REQUIREMENT

A. The CONTRACTOR shall at all times maintain at the site of the project a record copy of:

1. Drawings
2. Specifications
3. Addenda
4. Change Orders and other modifications to the Contract.
5. Approved Shop Drawings, Product Data and Samples.
6. Field Test Records.

1.02 RELATED WORK SPECIFIED ELSEWHERE

A. All applicable sections of the Specifications.

B. General conditions.

1.03 MAINTENANCE OF DOCUMENTS AND SAMPLES

A. Store documents and samples in CONTRACTOR'S field office apart from documents used for construction.

1. Provide files and racks for storage of documents.
2. Provide locked cabinet or secure storage space for storage of samples.

B. File documents and samples in accordance with CSI format.

C. Maintain documents in a clean, dry, legible condition and in good order. Do not use record documents for construction purposes.

D. Make documents and samples available at all times for inspection by CITY'S Representatives.

1.04 MARKING DEVICES

A. Provide felt tip marking pens for recording information in the color code designated by PROGRAM MANAGER.

1.05 RECORDING

Definition: The Project Record is the updated and revised plans and specifications, including a running account of all known revisions and changes made to the original plans

and specifications, complete with copies of any field sketches and clarifications, issued over the course of construction. The Project Record is the responsibility of the CONTRACTOR.

A. The CONTRACTOR shall label each document, "PROJECT RECORD" in neat large printed letters, or by rubber stamp.

B. Record information concurrently with construction progress. Do not conceal any work until required information is recorded.

C. Drawings: Legibly mark to record actual construction:

1. Horizontal and vertical locations of underground utilities and appurtenances, referenced to permanent surface improvements.
2. Location of internal utilities and appurtenances concealed in the construction, referenced to visible and accessible features of the structure.
3. Field changes of dimension and detail.
4. Changes made by Field Order or by Change Order.
5. Details not on original Contract Drawings.
6. The Record Drawing set shall show benchmark positions and their vertical values. Benchmarks are optional for Plan Views, but required for Profile Views.

D. Specifications and Addenda; Legibly mark each Section to record:

1. Manufacturer, trade name, catalog number, and supplier of each produce and item of equipment actually installed.
2. Changes made by field order or by Change Order.

1.06 RECORD DRAWINGS

Definition: The Record Drawings are a revised set of drawing submitted by a contractor upon completion of a project. They reflect all changes made in the specifications and working drawings during the construction process, and show the exact dimensions, geometry, and location of all elements of the work completed under the contract.

A. The CONTRACTOR shall maintain full size (24"X 36") project record to reflect the "record" items of work as the work progresses. Upon completion of the work, the CONTRACTOR shall prepare a set of record drawings on full-size, reproducible material and an electronic file in (DWG format, AutoCAD, Version 2011 or more recent version OR GIS). The record drawings will, in the greatest possible detail, reproduce the exact final conditions of the entire project. Including, but not limited to, final survey, utilities, architecture, structural, civil conditions, electrical, mechanical, paving, landscaping, irrigation, updating all details and all notes, parking, and any other plans related to a specific project. For the purpose of producing the final record drawings, based on the project record, the CONSULTANT will furnish one set of full size design drawings on reproducible material and an electronic file (DWG format, AutoCAD, Version 2011 or more recent version OR GIS) to the CONTRACTOR on compact disk or any other electronic means.

Definition: Design drawings or construction drawings, are drawings that are subject to clarifications, but are complete with enough information (plan, sections, dimensions,

details, and notes, ect.) to enable the depicted item's construction or replication without additional information.

B. At a minimum the project record shall be reviewed on the 20th working day of every third month, or more often, as deemed necessary by PROGRAM MANAGER, after the month in which the final Notice-to Proceed is given as well as on completion of WORK. Failure to maintain the project record up-to-date shall be grounds for withholding monthly progress payments until such time as the record drawings are brought up-to date.

C. The project record shall be accessible to the CITY at all times during construction period.

D. The cost of maintaining record changes, and preparation of the record drawings shall be included in the unit prices bid for the affected items. Upon completion of the WORK, the CONTRACTOR shall furnish the PROGRAM MANAGER the set of record drawings on full-size, reproducible material and an electronic file in (DWG format, AutoCAD, Version 2011 or more recent version OR GIS) Pay request quantities must match this same set of record drawings . The completed Record drawings shall be delivered to the PROGRAM MANAGER at least 48 hours prior to final inspection of the work. The Final Inspection will not be conducted unless the Record Drawings are in the possession of the PROGRAM MANGER.

E. The completed (or final) record drawings shall be certified by a Professional Land Surveyor, a registered and licensed Architect, a registered and licensed Engineer, a registered and licensed Landscape Architect, registered in the State of Florida. This certification shall consist of the professional discipline official's embossed seal bearing the professional discipline official's registration number, signature and date on each sheet of the drawing set. In addition, the key sheet, cover sheet or first sheet of the plans set shall list the business address and telephone number for all of the professional discipline officials.

F. Representative items of work that should be shown on the record drawings as verified, changed or added are shown below:

1. All deviations from condition shown in the Construction Documents including Change Orders, Field Orders and other varying conditions.
2. Every utility (gas, telephone, power, water, force main, etc.) encountered and/or crossing drainage, water or sanitary sewer facilities (whether it is a conflict or has sufficient clearances) shall be located, both horizontally and vertically. The clearance between the facilities horizontal and vertical shall be noted. For instance, if a 2-inch gas main crosses over the top of a 6-inch potable water main, the bottom elevation of the gas main shall be noted and the top of the water main shall be noted. The difference between the two facilities will be the clearance between the two facilities. Parallel mains shall note the clearance between the outside of the mains. It shall be the CONTRACTOR's responsibility to note these crossings on a daily basis and insure that this information is reflected on the Record Drawing plan set. Crossings will not require state plane coordinates.
3. Pipelines that are "dead" or have been abandoned shall be located during construction and shall be annotated Record Drawing Plans.
4. As-built survey drawings shall meet applicable minimum technical standards for land surveys as outlined in Section 61G17 of the Florida Administrative Code.

NOTE: For technical information on AutoCAD and GIS, please refer to the "Electronic As Built Requirements" located on the City Engineering Website.
http://pompanobeachfl.gov/pages/department_directory/public_works/engineering_division/engineering division.html.php

PART 2 -PRODUCTS (Not Applicable)

PART 3 -EXECUTION (Not Applicable)

END OF SECTION -01720