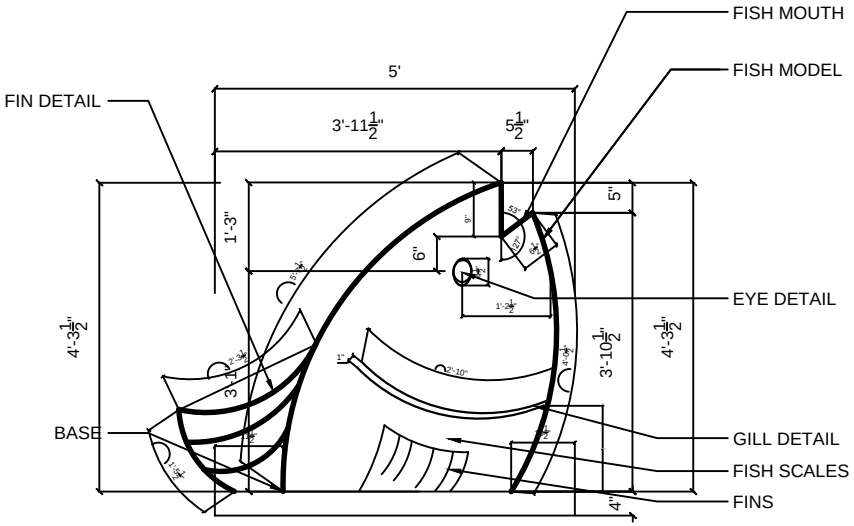

SIDE VIEW - ELEVATION

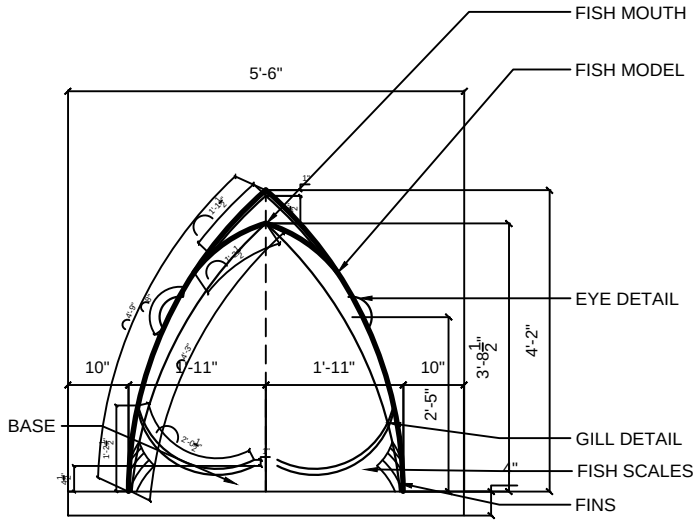

SIDE VIEW - BOTTOM

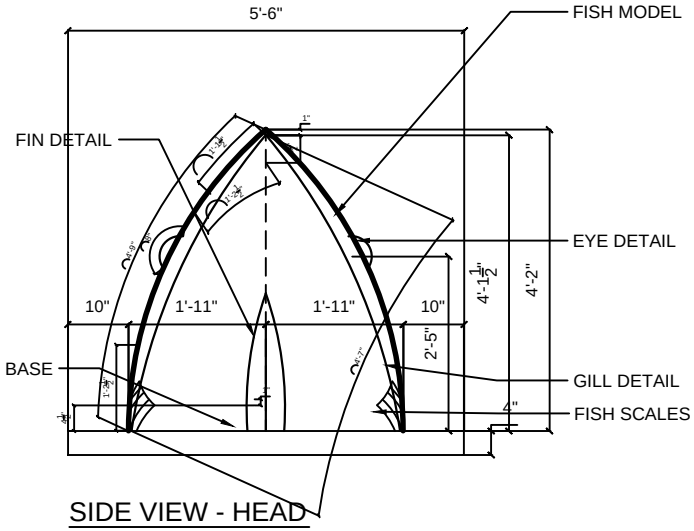

SIDE VIEW - HEAD

POMPANO FISH #2

SCALE ⅜" = 1'-0"

EXHIBIT A