CITY OF POMPANO BEACH

pompano beach
Florida's Warmest Welcome

WATER TREATMENT PLANT (WTP)
ELECTRICAL MASTER PLAN PHASE II IMPROVEMENTS
HIGH SERVICE PUMP 1-4 BUILDING

LOCATION MAP

SEPTEMBER 2014

carollo®
3440 HOLLYWOOD BOULEVARD, SUITE 465
HOLLYWOOD, FLORIDA 33021
TEL: (954) 837-0030 - FAX: (954) 837-0035

Gamboa Engineers
17433 SW 65 CT, SOUTHWEST RANCHES,
FL 33331
PHONE (954) 533-1121

JOB NO.
8683D.10 (II)
DRAWING NO.
G-00-01

Last Opened by: 8-27-11 08:26am CCabrera

FILENAME: Last Saved By: $(GETPROP)??

DRAWING INDEX

GENERAL

1. G-00-G1 COVER SHEET
2. G-00-G2 DRAWING INDEX
3. G-00-G3 ABBREVIATIONS AND SYMBOLS

CIVIL

4. C-SP-01 PARTIAL SITE PLAN, LANDSCAPE REPAIR & CIVIL CONSTRUCTION STAGING
5. C-SP-02 PUBLIC WORKS BUILDING AREA PARTIAL SITE PLAN - SURFACE REPAIR
6. C-SP-03 PUBLIC WORKS BUILDING AREA PARTIAL SITE PLAN - DETAILS

STRUCTURAL

7. S-HSP-01 ELECTRICAL ROOMS - FLOOR PLAN IMPROVEMENTS AND SCHEDULES
8. S-DSHP-01 480V ELECTRICAL ROOM FLOOR PLAN - DEMOLITION AND MODIFICATIONS

HVAC

9. H-HSP-01 HVAC NOTES AND SCHEDULES
10. H-HSP-02 DUCTWORK EXTENSION PLAN

MECANICAL

11. M-00-01 HIGH SERVICE PUMP 1-4 BUILDING - BW PUMPS MOTOR REPLACEMENT DETAILS

ELECTRICAL

12. E-GE-01 ELECTRICAL LEGEND - SHEET I
13. E-GE-02 ELECTRICAL LEGEND - SHEET II
14. E-GE-03 ABBREVIATIONS
15. E-GE-04 PANEL SCHEDULES
16. E-GE-05 PULL BOX AND LUMINAIRE SCHEDULES
17. E-SP-01 HSP BUILDING AREA PARTIAL SITE PLAN
18. E-SP-02 PUBLIC WORKS BUILDING AREA PARTIAL SITE PLAN
19. E-SP-03 DUCT BANK SECTIONS AND PARTIAL SITE PLAN
20. E-OL-01 WTP - EXISTING 5KV ONE LINE DIAGRAM - MODIFICATIONS
21. E-OL-02 5KV MOTOR CONTROL CENTER A AND B - ELEVATION
22. E-OL-03 5KV MOTOR CONTROL CENTER 14 PPS A & B - ONE LINE DIAGRAM
23. E-OL-04 SWITCHBOARD "14 SB1" ONE LINE DIAGRAM
24. E-OL-05 SWITCHBOARD "MF-1" ONE LINE DIAGRAM AND ELEVATION - ADDITIONS
25. E-OL-06 PUBLIC WORKS BUILDING ONE LINE DIAGRAM AND ELEVATION - ADDITIONS
26. E-CS-01 FEEDER CONTROL SCHEMATIC FOR TRANSFORMER
27. E-CS-02 CONTROL SCHEMATICS FOR BACK WASH PUMPS No.1 & No. 2
28. E-PC-01 HIGH SERVICE PUMP 1-4 BUILDING - POWER, CONTROL AND LIGHTING PLAN I
29. E-PC-02 HIGH SERVICE PUMP 1-4 BUILDING - POWER, CONTROL AND LIGHTING PLAN II
30. E-PC-03 FILTER BUILDING POWER AND CONTROL PLAN
31. E-PC-04 MEMBRANE BUILDING - PARTIAL GROUND LEVEL POWER PLAN
32. E-DE-01 HIGH SERVICE PUMP 1-4 BUILDING - DEMOLITION PLAN I
33. E-DE-02 HIGH SERVICE PUMP 1-4 BUILDING - DEMOLITION PLAN II
34. E-DE-03 HIGH SERVICE PUMP 1-4 BUILDING DEMOLITION DETAILS - PHOTOS
35. E-DE-04 HSP 1-4 BUILDING - SUBSTATION TU-4 & SWBD 14SB1 ONE LINE - DEMOLITION
36. E-TE-01 HIGH SERVICE PUMP 1-4 BUILDING TEMPORARY POWER ONE LINE DIAGRAM
37. E-TE-02 HIGH SERVICE PUMP 1-4 BUILDING TEMPORARY POWER PLAN
38. E-TE-03 PUBLIC WORKS BUILDING TEMPORARY POWER ONE-LINE DIAGRAM
39. E-CW-01 CONDUIT/WIRING SCHEDULE I
40. E-CW-02 CONDUIT WIRING SCHEDULE II
41. E-CW-03 CONDUIT WIRING SCHEDULE III

INSTRUMENTATION

42. N-00-01 P&ID LEGEND I
43. N-00-02 P&ID LEGEND II
44. N-00-03 EXISTING PLC CABINET WIRING ADDITION
45. N-00-04 BACKWASH PUMPS No. 1 & No. 2 - P&ID

TYPICALS

46. T-00-T1 ARCHITECTURAL TYPICAL DETAILS
47. T-00-T2 STRUCTURAL TYPICAL DETAILS
48. T-00-T3 STRUCTURAL TYPICAL DETAILS
49. T-00-T4 ELECTRICAL TYPICAL DETAILS - SHEET I
50. T-00-T5 ELECTRICAL TYPICAL DETAILS - SHEET II
51. T-00-T6 ELECTRICAL TYPICAL DETAILS - SHEET III
52. T-00-T7 ELECTRICAL TYPICAL DETAILS - SHEET IV
53. T-00-T8 ELECTRICAL TYPICAL DETAILS - SHEET V

CIVIL LEGEND

NEW STRUCTURES
EXISTING STRUCTURES
EXISTING PIPING (TRIPLE LINES)
EXISTING PIPING (SINGLE LINE)
CENTER, MONUMENT, OR SURVEY LINE
EXISTING CHAIN-LINK FENCE
NEW SLOPE — TOP / TOE
EXISTING SLOPE — TOP / TOE
EXISTING ROAD
CURB & GUTTER — OR
REMOVAL
ABANDON IN PLACE
GRADE BREAK — GB
FLOW DIRECTION
FLOW LINE
BENCH MARK
GUARD POST / BOLLARD
ELECTRICAL MANHOLE — MH-1
NEW PLANTS/BUSH

DRAWING CROSS REFERENCE

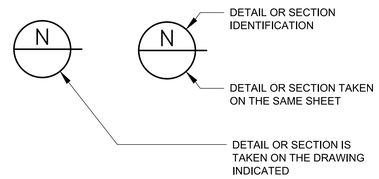

AT TITLE

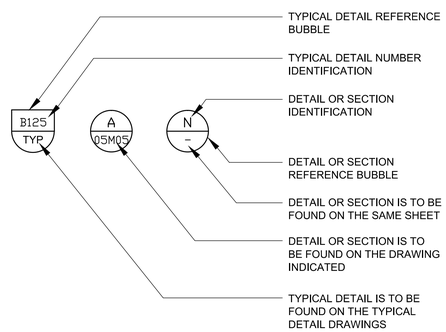

AT CROSS REFERENCE

BUILDING MATERIALS LEGEND

VIEW IN SECTION

MATERIAL	EXISTING	REMOVE	NEW
CLASS "A", "B", AND "D" CONCRETE			
CLASS "C" CONCRETE			
STEEL			
CAST IRON OR FIBERGLASS			
ALUMINUM			
BRICK OR BLOCK			
WOOD CROSS GRAIN, FINISH			
WOOD, STRUCTURAL			
BRONZE, BRASS, OR COPPER			
GRAVEL/CRUSHED SHELL			
RUBBER			
SOIL			
ASPHALTIC CONCRETE PAVEMENT			
RIP RAP			
TYPE II AGGREGATE BASE ROADWAY OR WALK			
CONCRETE PAVEMENT			
SOD			

GENERAL CIVIL NOTES

1. EXISTING FACILITY AND UTILITY INFORMATION SHOWN ON THE DRAWINGS WAS OBTAINED FROM AVAILABLE RECORDS OR ELECTRONIC FILES. NEITHER THE OWNER NOR ENGINEER ASSUMES ANY RESPONSIBILITY FOR FACILITIES AND UTILITIES NOT SHOWN OR NOT IN THE LOCATION SHOWN. THE CONTRACTOR SHALL FIELD VERIFY ALL LOCATIONS, SIZES, MATERIAL TYPES AND ELEVATIONS SHOWN AND AROUND OR NEAR AREAS OF NEW CONSTRUCTION PRIOR TO START OF CONSTRUCTION.
2. THE CONTRACTOR SHALL TAKE ALL PRECAUTIONARY MEASURES NECESSARY TO PROTECT EXISTING FACILITIES AND UTILITIES SHOWN OR NOT SHOWN WHICH ARE TO REMAIN IN PLACE FROM DAMAGE. ALL FACILITIES DAMAGED BY THE CONTRACTOR'S OPERATIONS SHALL BE EXPEDITIOUSLY REPAIRED OR RECONSTRUCTED TO THE ENGINEER'S SATISFACTION AT THE CONTRACTOR'S EXPENSE WITHOUT ADDITIONAL COMPENSATION.
3. PROVIDE A MINIMUM OF 36 INCHES COVER ON ALL PIPELINES UNLESS OTHERWISE SHOWN OR DIRECTED.
4. STRAIGHT ALIGNMENT AND UNIFORM SLOPES SHALL BE MAINTAINED BETWEEN INVERTS SHOWN.
5. ALL DEBRIS FROM DEMOLITION IS TO BE DISPOSED OF LEGALLY OFF SITE. ANY SALVAGABLE MATERIALS OR EQUIPMENTS SHALL BE THE PROPERTY OF THE OWNER AND REMOVED TO LOCATION AS DIRECTED BY THE OWNER.
6. THE CONTRACTOR SHALL SHORE, SUPPORT AND PROTECT EXISTING STRUCTURES AND FACILITIES IN ACCORDANCE WITH SECTION 02260.
7. WHERE REPLACING EXISTING PAVEMENT, MATCH EXISTING GRADE AT EXISTING STRUCTURES AND BUILDINGS, EXCEPT WHEN NOTED OTHERWISE.
8. CONTRACTOR SHALL NOTIFY SUNSHINE STATE ONE CALL SERVICE (1-800-432-4770) 48 HOURS PRIOR TO PROJECT STAKEOUT AND COMMENCING PROJECT EXCAVATION/TRENCHING. THE CONTRACTOR IS RESPONSIBLE FOR LOCATING ALL EXISTING UTILITIES IN THE PATH OF CONSTRUCTION. THE CONTRACTOR SHALL NOTIFY THE ENGINEER IMMEDIATELY WHEN CONFLICTS BETWEEN THESE DRAWINGS AND ACTUAL FIELD CONDITIONS ARE DISCOVERED.

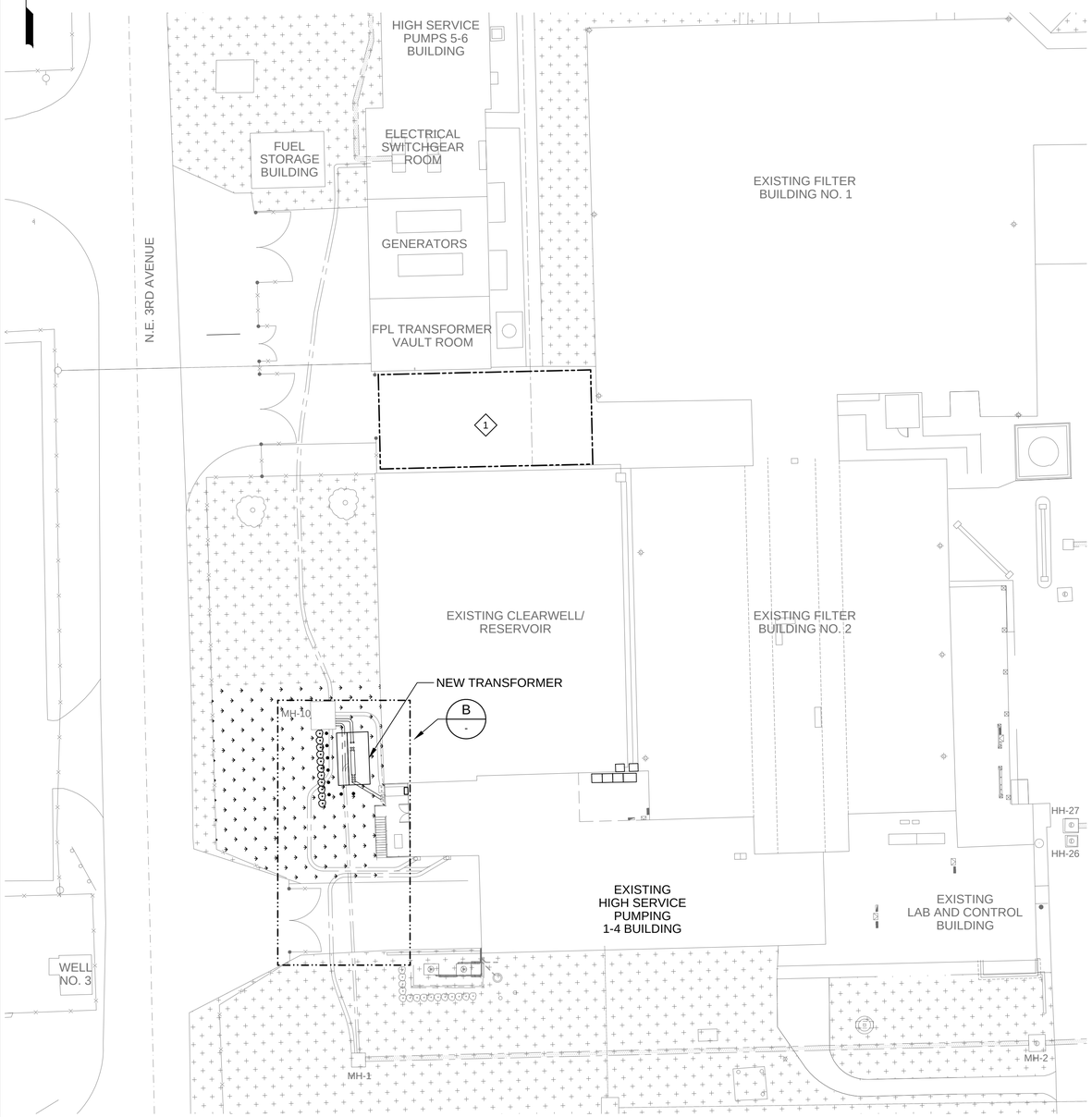

A - PARTIAL SITE PLAN - HSP BUILDING AREA

SCALE: 1"=20'

FILE: 8683D10-01-010-101, 8683D10-01-010-904, 8683D10-01-010-905

0 10' 20' 40'

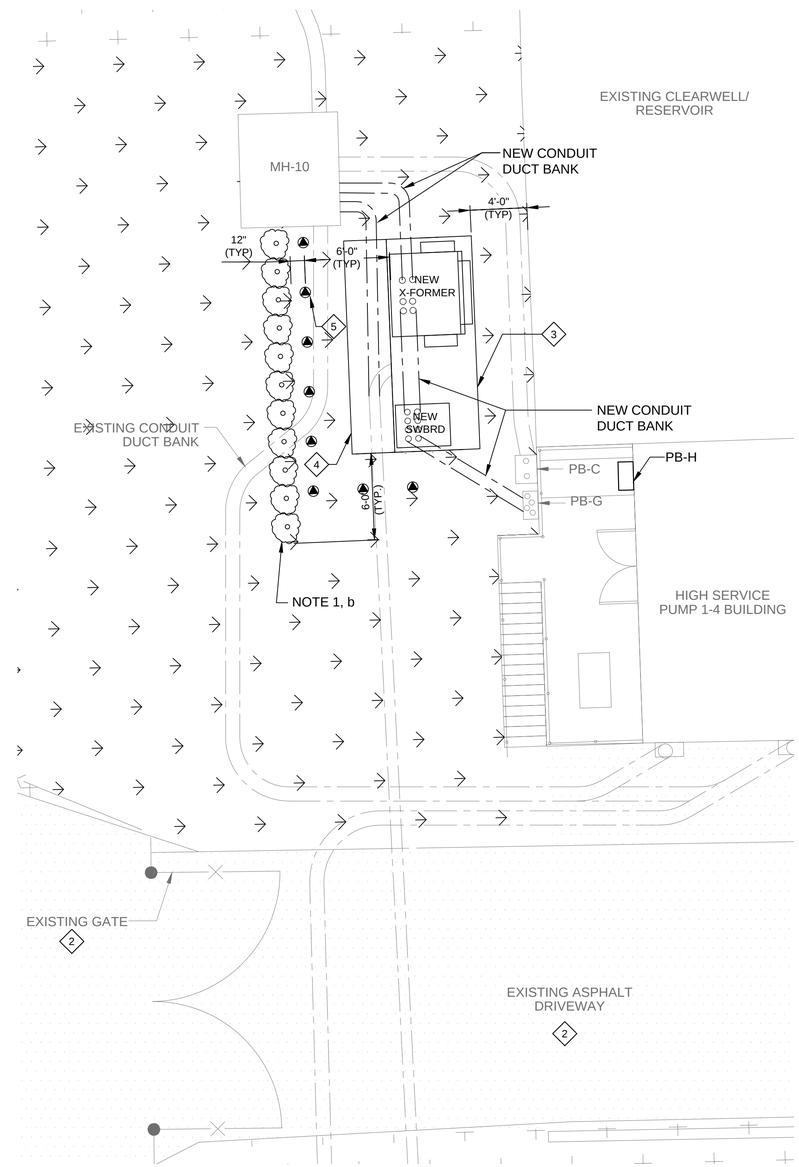

B - PARTIAL SITE PLAN - NEW TRANSFORMER AREA

SCALE: 3/16"=1'-0"

FILE: 8683D10-01-010-101, 8683D10-01-010-904, 8683D10-01-010-905

GENERAL NOTES:

1. LANDSCAPING:
   a. RESTORE ALL DISTURBED GRASS AREAS WITH SOD AS SPECIFIED IN SECTION 02900.
   b. SUPPLY AND INSTALL *ARBORICOLA CAPELLA* PLANTINGS WITH AVERAGE HEIGHT OF 48 INCHES, AT 24 INCH SPACINGS AS SPECIFIED IN SPECIFICATION SECTION 02900 TO SCREEN SURROUNDING OF TRANSFORMER.
   c. MAINTAIN SHRUBS AT 6" HEIGHT ABOVE TOP OF TRANSFORMER.
2. ALL WORK SHALL BE DONE IN ACCORDANCE WITH THE ORDINANCES OF THE CITY OF POMPANO BEACH.
3. EXISTING UTILITIES SHALL BE MAINTAINED IN SERVICE AT ALL TIMES. UTILITIES AND OBSTRUCTIONS SHOWN ON THE DRAWINGS WERE DERIVED FROM RECENT AVAILABLE DATA. THE LOCATION, MATERIAL, AND DIMENSIONS OF EXISTING OBSTRUCTIONS ARE BASED UPON AVAILABLE RECORDS, AND ARE SHOWN ON THE DRAWINGS AS AN AID TO THE CONTRACTOR, BUT MUST NOT BE CONSTRUED AS BEING ACCURATE, CORRECT OR COMPLETE.
4. ALL STRUCTURES ABOVE AND BELOW GROUND THAT ARE ENCOUNTERED DURING CONSTRUCTION SHALL BE PROPERLY SUPPORTED AND MAINTAINED. MAKE ARRANGEMENTS WITH THE OWNER IF STRUCTURES REQUIRE SHIFTING, SUPPORT, TEMPORARY RELOCATION AND PROTECTION. IF DAMAGED DURING CONSTRUCTION, THE CONTRACTOR SHALL MAKE OR PAY TO HAVE MADE ALL REPAIRS TO THE STRUCTURE TO THE SATISFACTION OF THE OWNER. NO EXTRA PAYMENT SHALL BE MADE FOR SUCH INTERFERENCES OR OBSTRUCTIONS.
5. CONTRACTOR IS RESPONSIBLE FOR LOCATING ALL BENCHMARKS, PROPERTY CORNERS AND WITNESS MARKS AS SHOWN ON THE DRAWINGS, AND IS RESPONSIBLE TO SET EQUIPMENT, STRUCTURES AND PIPING IN THE EXACT LOCATIONS AND ELEVATIONS AS INDICATED ON THE DRAWINGS.
6. WHEN BACKFILL AROUND EXISTING PIPELINES IS DISTURBED, USE FDOT SECTION 204 GRADED AGGREGATE BASE FOR REPLACEMENT. COMPACTION SHALL BE AS SPECIFIED IN SPECIFICATION SECTION 02300.
7. SEE DWG E-SP-01, E-SP-02 & E-SP-03 FOR EXISTING UTILITIES AND NEW UNDERGROUND WORK.
8. THE BOUNDARY TO REPAIR LANDSCAPE AND ASPHALT SHALL INCLUDE ALL AREAS DAMAGED BY NEW UNDERGROUND WORK AND CONSTRUCTION EQUIPMENT

KEY NOTES:

1. CONTRACTOR STAGING / STORAGE / TRAILER AREA. ANY DAMAGE TO ASPHALT AREA SHALL BE REPAIRED TO MATCH ADJACENT AREA FINISH.
2. MOMENTARY PARKING LOADING / UNLOADING AREA. ANY DAMAGE TO ASPHALT AREA SHALL BE REPAIRED TO MATCH ADJACENT AREA FINISH. PROVIDE NEW TACK COATING FINISH
3. EQUIPMENT PAD FOR TRANSFORMER AND SWITCHBOARD 180" L x 72" W x 8" D. VERIFY DIMENSIONS WITH SHOP DRAWINGS. S302 TYP
4. CONCRETE SLAB 180" L x 108" W. S300 TYP
5. PROVIDE REMOVABLE STEEL PROTECTIVE BOLLARDS, 48" O.C MAX. C161 TYP

REV	DATE	BY	DESCRIPTION
0	SEP - 2014	JB	ISSUED FOR BID

DESIGNED EF
DRAWN JB
CHECKED
DATE SEPTEMBER, 2014
PROJECT ENGINEER

carollo®
3440 HOLLYWOOD BOULEVARD, SUITE 465
HOLLYWOOD, FLORIDA 33021
TEL: (954) 837-0030 - FAX: (954) 837-0035

pompano beach
Florida's Warmest Welcome

CITY OF POMPANO BEACH
WTP ELECTRICAL PHASE II IMPROVEMENTS
HIGH SERVICE PUMP 1-4 BUILDING
CIVIL
HSP BUILDING AREA PARTIAL SITE PLAN, LANDSCAPE REPAIR AND CONSTRUCTION STAGING

VERIFY SCALES
BAR IS ONE INCH ON ORIGINAL DRAWING
0 1"
IF NOT ONE INCH ON THIS SHEET, ADJUST SCALES ACCORDINGLY

JOB NO. 8683D.10 (II)
DRAWING NO. C-SP-01
SHEET NO. 4 OF 53

LAST SAVED BY: ccabrera
PROJECT NO. 8683D10 FILE NAME: 8683D10-C-SP-01.dgn

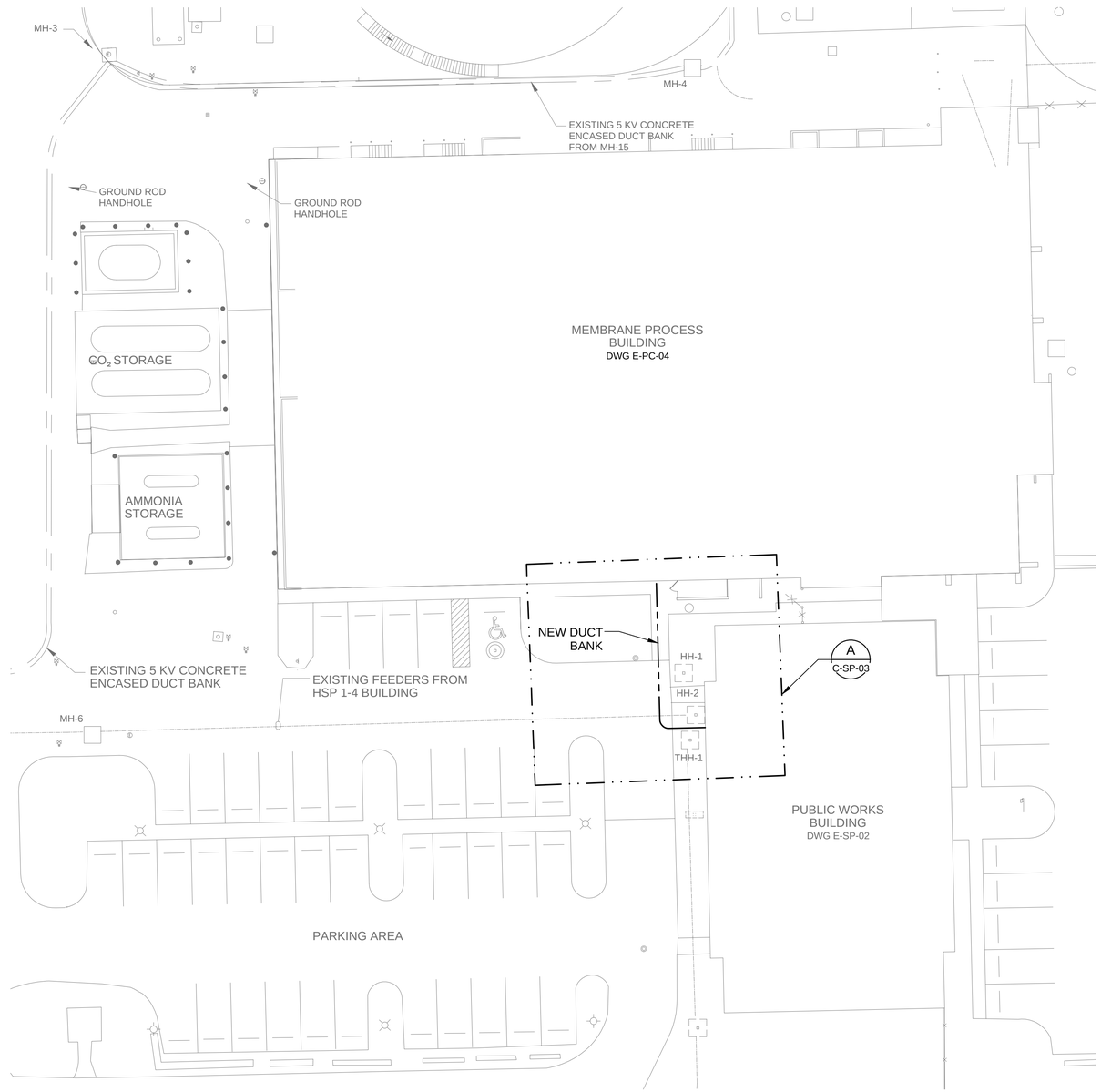

A PARTIAL SITE PLAN - PUBLIC WORKS BUILDING AREA

SCALE: 1"=20'
FILE: 8683D10-01-010-101,8683D10-010-901,8683D10-010-904

0 10' 20' 40'

LAST SAVED BY: jnewberry

REV	DATE	BY	DESCRIPTION
0	SEP - 2014	JB	ISSUED FOR BID

DESIGNED EF
DRAWN JB
CHECKED
DATE SEPTEMBER, 2014
PROJECT ENGINEER

carollo
3440 HOLLYWOOD BOULEVARD, SUITE 465
HOLLYWOOD, FLORIDA 33021
TEL: (954) 837-0030 - FAX: (954) 837-0035

pompano beach
Florida's Warmest Welcome

CITY OF POMPANO BEACH
WTP ELECTRICAL PHASE II IMPROVEMENTS
HIGH SERVICE PUMP 1-4 BUILDING
CIVIL
PUBLIC WORKS BUILDING AREA
PARTIAL SITE PLAN - SURFACE REPAIR

VERIFY SCALES
BAR IS ONE INCH ON ORIGINAL DRAWING
0 1"
IF NOT ONE INCH ON THIS SHEET, ADJUST SCALES ACCORDINGLY

JOB NO. 8683D.10 (II)
DRAWING NO. C-SP-02
SHEET NO. 5 OF 53

PROJECT NO. 8683D10 FILE NAME: 8683D10-C-SP-05.dgn

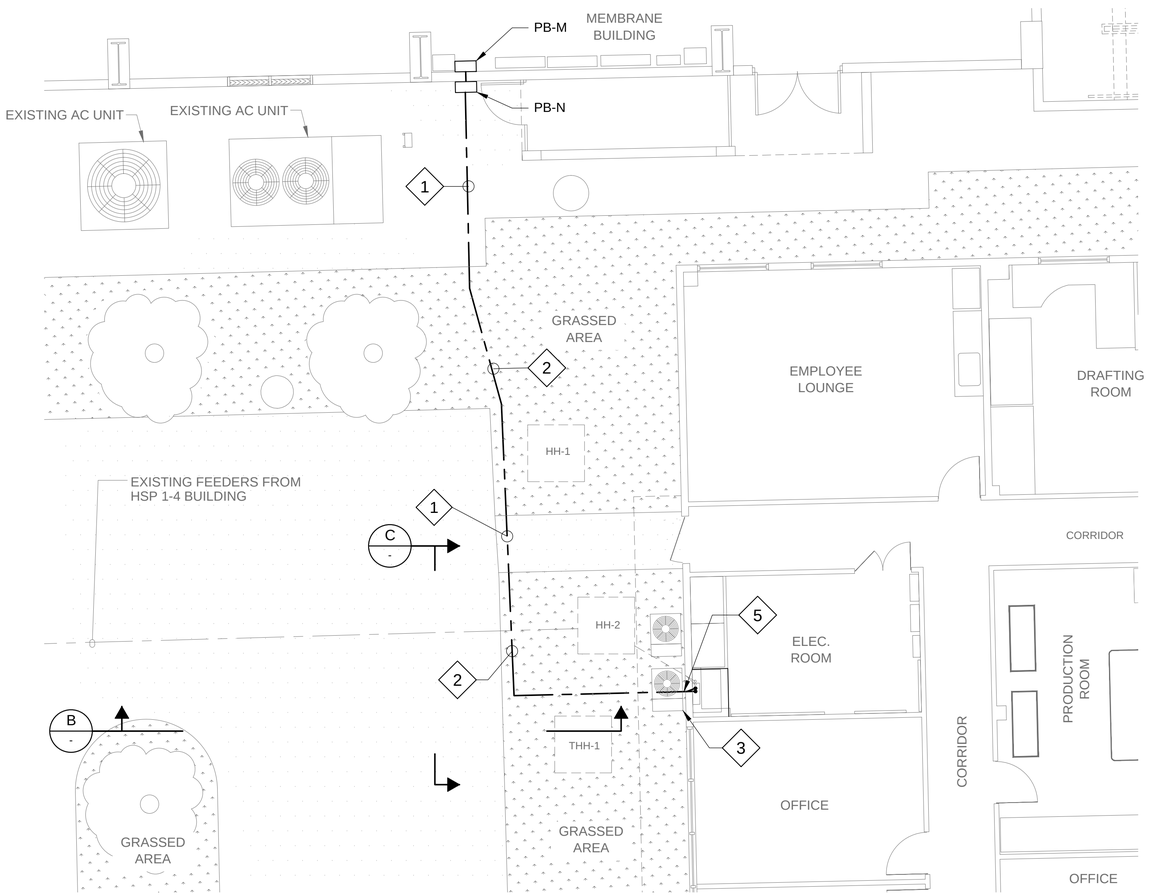

A
PARTIAL GROUND LEVEL PLAN - PUBLIC WORKS BUILDING
SCALE: 3/16"=1'-0"
FILE:

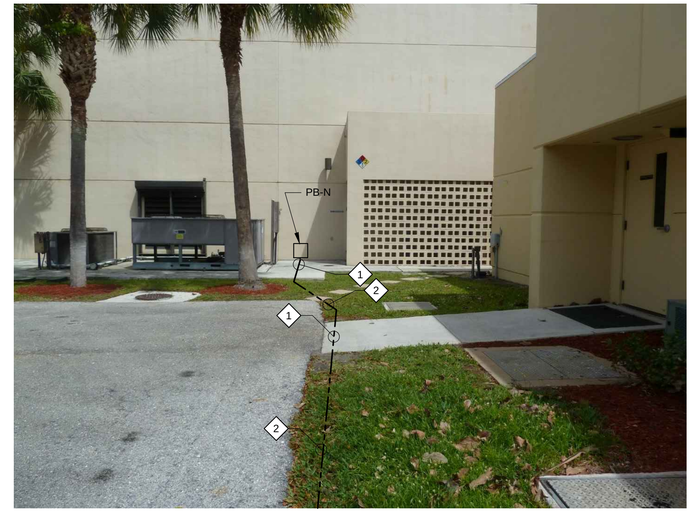

B
MEMBRANE BUILDING WALL (PHOTO)
SCALE: NTS
FILE:

KEY NOTES:

1. SAW CUT CONCRETE WALKWAY AREA FOR TRENCH AND DUCT BANK. PATCH CONCRETE TO MATCH EXISTING SURFACE FINISH.
2. UPON COMPLETION OF TRENCHING, PATCH GRASSED AREA TO MATCH EXISTING CONDITIONS. IF ADJACENT ASPHALT IS DAMAGED DURING CONSTRUCTION, PATCH ASPHALT TO MATCH EXISTING SURFACE FINISH.
3. TEMPORARY RELOCATE EXISTING AC UNIT TO ALLOW TRENCHING FOR NEW CONDUIT. UPON COMPLETION OF WORK MOVE EXISTING AC UNIT TO IT'S ORIGINAL LOCATION AND RESTORE ADJACENT AREA TO MATCH EXISTING CONDITIONS.
4. BACK FILL EXISTING OPENING WITH 8" CMU, PLUS STUCCO AT EXTERIOR AND GYPSUM AT INTERIOR. PAINT TO MATCH ADJACENT FINISH.
5. FOR TEMPORARY POWER, REMOVE PORTION OF SOFFIT TO ALLOW ROUTING OF TEMPORARY CONDUCTORS FROM HH-2 TO TRANSFORMER INSIDE ELECTRICAL ROOM. UPON COMPLETION OF WORK, PROVIDE NEW SOFFIT PANEL, AND RESTORE SOFFIT TO IT'S ORIGINAL CONDITION INCLUDING PAINTING.

C
ELECTRICAL ROOM WALL (PHOTO)
SCALE: NTS
FILE:

REV	DATE	BY	DESCRIPTION
0	SEP - 2014	JB	ISSUED FOR BID

DESIGNED EF
DRAWN JB
CHECKED
DATE SEPTEMBER, 2014
PROJECT ENGINEER

carollo
3440 HOLLYWOOD BOULEVARD, SUITE 465
HOLLYWOOD, FLORIDA 33021
TEL: (954) 837-0030 - FAX: (954) 837-0035

pompano beach
Florida's Warmest Welcome

CITY OF POMPANO BEACH
WTP ELECTRICAL PHASE II IMPROVEMENTS
HIGH SERVICE PUMP 1-4 BUILDING
CIVIL
PUBLIC WORKS BUILDING AREA
PARTIAL SITE PLAN - DETAILS

VERIFY SCALES
BAR IS ONE INCH ON ORIGINAL DRAWING
0 1"
IF NOT ONE INCH ON THIS SHEET, ADJUST SCALES ACCORDINGLY

JOB NO. 8683D.10 (II)
DRAWING NO. C-SP-03
SHEET NO. 6 OF 53

LAST SAVED BY: jnewberry
PROJECT NO. 8683D10 FILE NAME: 8683D10-C-SP-05.dgn

ROOM FINISH SCHEDULE

ROOM NO.	ROOM NAME	FLOOR MAT'L	FLOOR FINISH	BASE MAT'L	NORTH WALL MAT'L	NORTH WALL FINISH	SOUTH WALL MAT'L	SOUTH WALL FINISH	EAST WALL MAT'L	EAST WALL FINISH	WEST WALL MAT'L	WEST WALL FINISH	CEILING MAT'L	CEILING HEIGHT	CEILING FINISH	REMARKS	ROOM NO.
HIGH SERVICE PUMP BUILDING - SEE PLAN BELOW																	
103	480V ROOM	EXIST CONC	SEAMLESS	SEAMLESS	GYP BD	PAINT	GYP BD	PAINT	GYP BD	PAINT	GYP BD	PAINT	EXIST CONC	VARIES	PAINT		103

DOOR & HARDWARE SCHEDULE

SEE THESE TYP DETAILS UNLESS OTHERWISE INDICATED: A105 TYP, A104 TYP, A112 TYP, A120 TYP, A120 TYP, A122 TYP

NOTE: ALL EXIT DOORS ARE TO BE OPENABLE FROM THE INSIDE WITHOUT THE USE OF A KEY OR SPECIAL KNOWLEDGE OR EFFORT. AT PAIRS OF DOORS, PROVIDE SCHEDULED HARDWARE AT EACH OF THE DOORS, UNLESS OTHERWISE INDICATED.

DOOR NO.	INT/EXT	DOOR WIDTH	DOOR HEIGHT	DOOR THICK	DOOR TYPE	DOOR MAT'L	DOOR FINISH	FRAME WIDTH	FRAME HEIGHT	FRAME DEPTH	FRAME TYPE	FRAME MAT'L	FRAME FINISH	DETAILS HEAD	DETAILS JAMB	DETAILS JAMB	DETAILS SILL	HARDWARE LOCK	HINGE	CLOSER	T'HOLD	WSTRIP	SILENCER	BOLTS	PUSH	PULL	L PROT	ASTRGAL	DR BOTT	EXIT DEV	STOP	LABEL	ACTIVE DOOR	REMARKS	DOOR NO.
HIGH SERVICE PUMP BUILDING - SEE PLAN BELOW																																			
01	INT	PR 3'-2"	7'-0"	1 3/4"	V	STL	COATING	6'-8"	7'-2"	8"	R	STL	COATING	E	E	E	E	L-1	H-1	C-1	T-1	W-1	-	B-1	-	-	-	A-1	D-1	E-1	S-1	1 1/2 HR	- RHRA	PROVIDE JAMB ANCHORS FOR EXIST MASONRY	01

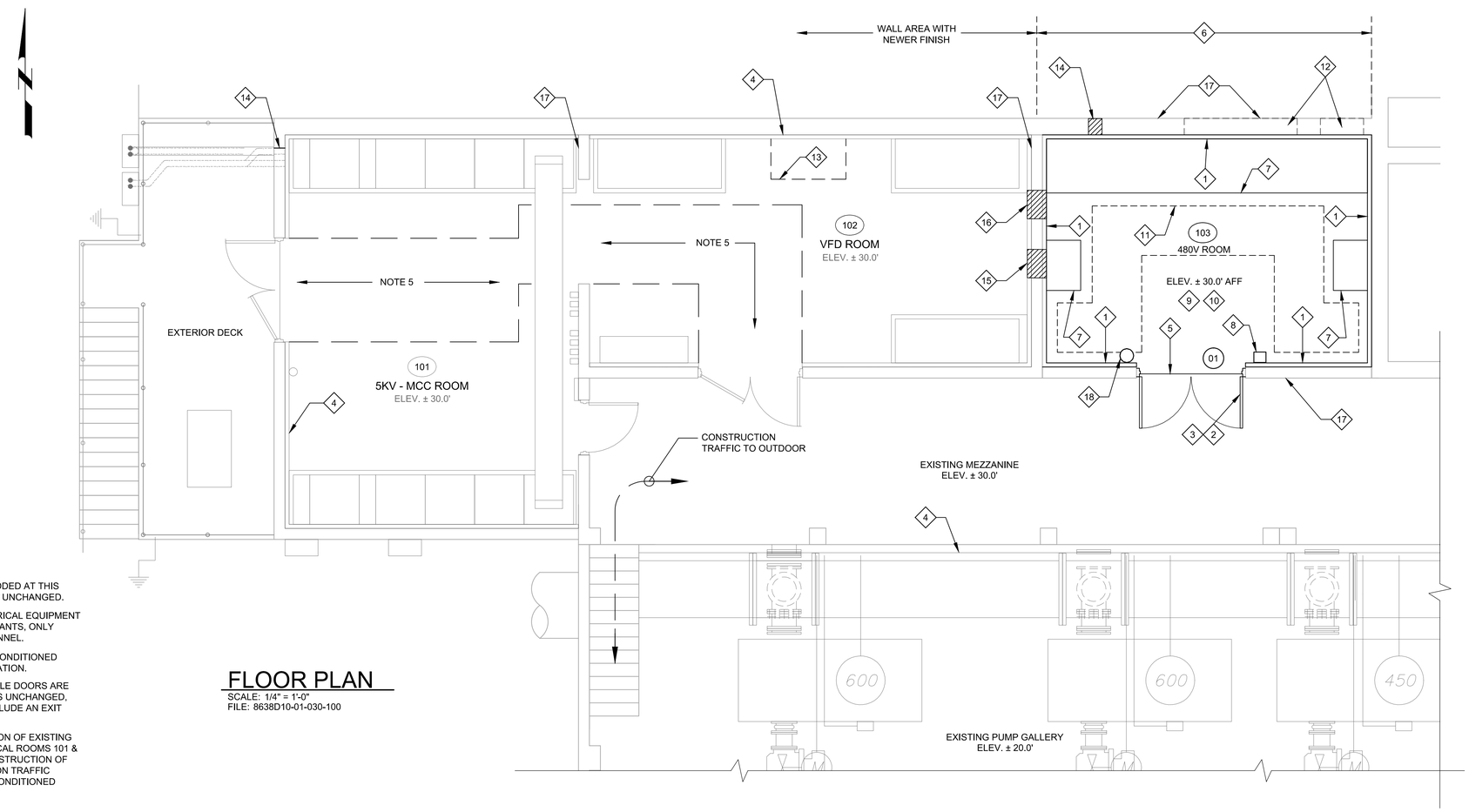

FLOOR PLAN

SCALE: 1/4" = 1'-0"
FILE: 8638D10-01-030-100

GENERAL NOTES:

1. NO NEW FLOOR AREA IS BEING ADDED AT THIS LOCATION. EXISTING OCCUPANCY IS UNCHANGED.
2. REMODELED SPACE IS AN ELECTRICAL EQUIPMENT ROOM WITH NO PERMANENT OCCUPANTS, ONLY OCCASIONAL MAINTENANCE PERSONNEL.
3. EXISTING ROOF, ABOVE NEWLY CONDITIONED SPACE, INCLUDES R-19 RIGID INSULATION.
4. DOOR IS BEING REPLACED. DOUBLE DOORS ARE FOR EQUIPMENT ACCESS. EXITING IS UNCHANGED, EXCEPT THAT NEW DOORS WILL INCLUDE AN EXIT DEVICE AT ACTIVE LEAF.
5. PROVIDE TEMPORARY PROTECTION OF EXISTING FLOOR FINISH IN EXISTING ELECTRICAL ROOMS 101 & 102 TO AVOID DAMAGE DURING CONSTRUCTION OF NEW WORK, MINIMIZE CONSTRUCTION TRAFFIC THROUGH EXISTING ROOMS WITH CONDITIONED SPACE.

KEY NOTES:

1. WALL INSUL SYSTEM (SEE SPEC), GYP BD OVER 2" RIGID FOAM INSULATION, INSTALL FROM FLOOR TO UNDERSIDE OF PRECAST DOUBLE TEE BEAMS.
2. REMOVE EXISTING DOOR AND FRAME. REPLACE WITH NEW DOOR, FRAME, AND HARDWARE, SEE SPEC AND SCHEDULE ABOVE. FIELD VERIFY SCHEDULED OPNG SIZE.
3. FIELD MEASURE EXISTING DOOR OPENINGS, ADJUST SCHEDULED DOOR SIZE AS REQUIRED.
4. SCREENED LINEWORK INDICATES EXIST CONST OR NEW EQUIP OF ANOTHER DISCIPLINE, SEE DISCIPLINE DWGS FOR EQUIP DETAILS.
5. PROVIDE THRESHOLD, DOOR BOTTOM AND WEATHER STRIPPING.
6. NEW WEATHERPROOF STUCCO AND WATER REPELLENT SEALER FINISH. COLOR TO MATCH ADJACENT WALL.
7. CONC EQUIP PAD, 4" HIGH TYP, PER S304 TYP
8. WALL MOUNTED FIRE EXTINGUISHER.
9. ROOM HEIGHT AT BOTTOM OF CONCRETE JOIST ELEV. 43.92'.
10. PROVIDE NEW SEAMLESS FLOOR FINISH PER SPECIFICATION SECTION 09722.
11. NON CONDUCTIVE-INSULATING RUBBER FLOOR MAT; CORRUGATED, TYPE II-CLASS 2 DIMENSION= 1/4" THICK BY AREA INDICATED.
12. FILL EXISTING WINDOW AND FAN OPENING WITH 8" CMU, FINISH WITH STUCCO AT EXTERIOR AND GYPSUM BOARD AT INTERIOR, FINISH TO MATCH EXISTING.
13. RESERVED SPACE FOR FUTURE HSP-1 VFD.
14. EXISTING 4 - 4" CONDUIT NIPPLES THROUGH WALL TO BE REUSED. ADD CORE DRILLING FOR 1- 2" CONDUIT AND SEAL WATERTIGHT. SEE DWG E-PC-01 FOR ELECTRICAL WORK.
15. WALL OPENING FOR HVAC DUCTWORK. SEE DETAIL "A", SHEET T-00-T1.
16. 12" X 12" WALL OPENING FOR AIR RETURN. SEE DETAIL "A", SHEET T-00-T1.
17. SEE DWG E-PC-01 FOR NEW CONDUITS WALL CORE DRILLING.
18. WALL MOUNTED FIRE EXTINGUISHER.

REV	DATE	BY	DESCRIPTION
0	SEP - 2014	JB	ISSUED FOR BID

DESIGNED JDS
DRAWN JB
CHECKED
DATE SEPTEMBER, 2014
PROJECT ENGINEER

carollo
3440 HOLLYWOOD BOULEVARD, SUITE 465
HOLLYWOOD, FLORIDA 33021
TEL: (954) 837-0030 - FAX: (954) 837-0035

pompano beach
Florida's Warmest Welcome

CITY OF POMPANO BEACH
WTP ELECTRICAL PHASE II IMPROVEMENTS
HIGH SERVICE PUMP 1-4 BUILDING
STRUCTURAL
ELECTRICAL ROOMS FLOOR PLAN IMPROVEMENTS AND SCHEDULES

VERIFY SCALES
BAR IS ONE INCH ON ORIGINAL DRAWING
0 1"
IF NOT ONE INCH ON THIS SHEET, ADJUST SCALES ACCORDINGLY

JOB NO. 8683D.10 (II)
DRAWING NO. S-HSP-01
SHEET NO. 7 OF 53

LAST SAVED BY: ccabrera
PROJECT NO. 8683D10 FILE NAME: 8683D10-S-HSP-01.dgn

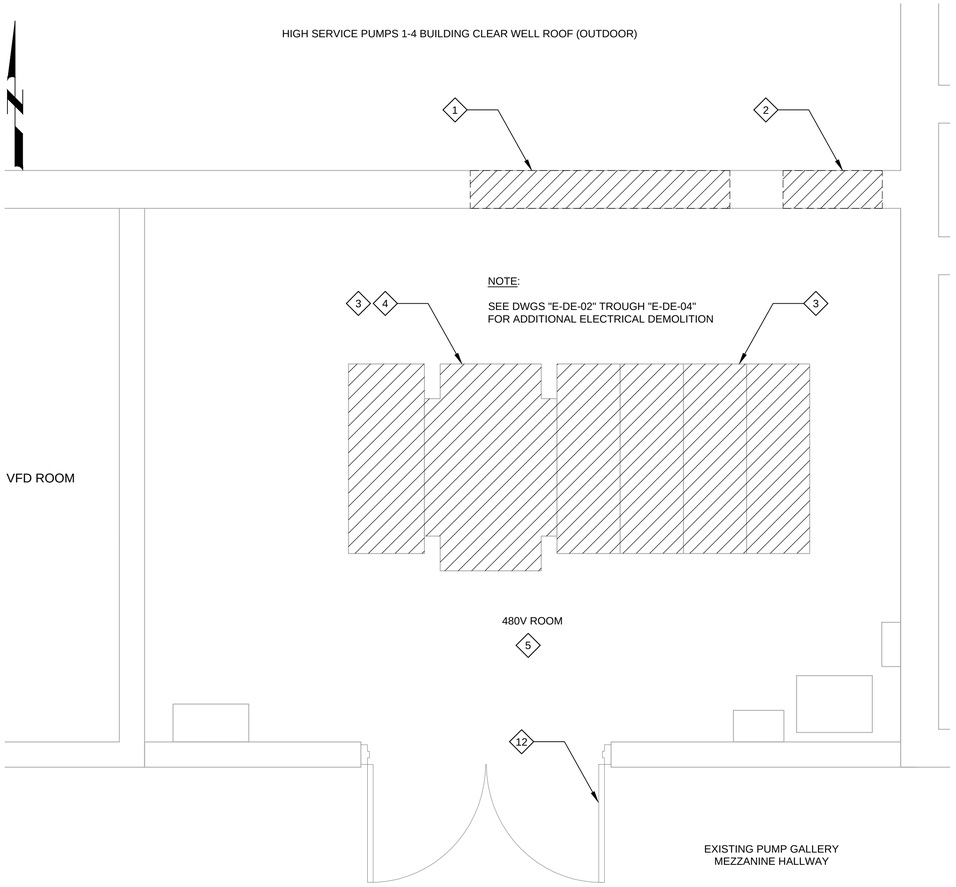

A 480V ROOM FLOR PLAN
SCALE: 1/2" = 1'-0"
FILE: 8683D10-01-040-901

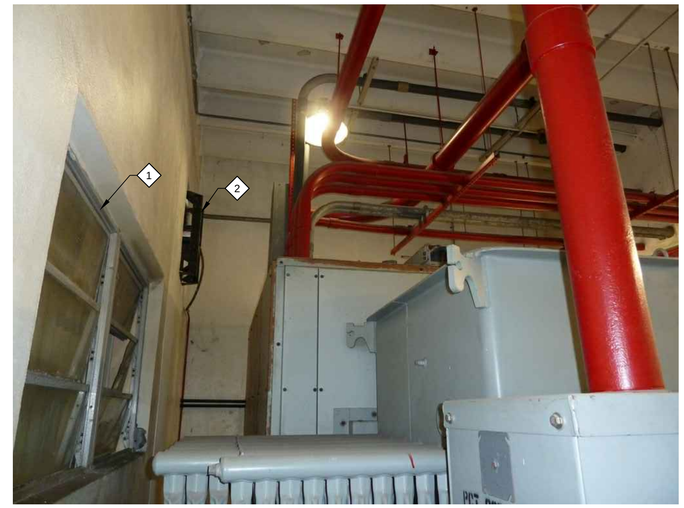

B WINDOW AND VENTILATION FAN DETAIL
SCALE: N.T.S.
FILE:

C 5KV TRANSFORMER AND SWBD DETAIL
SCALE: N.T.S.
FILE:

D 480V ROOM DOOR DETAIL
SCALE: N.T.S.
FILE:

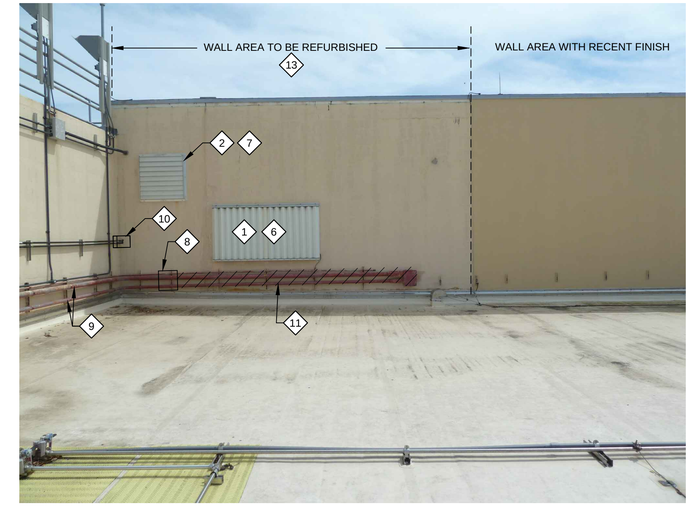

E 480V ROOM EXTERIOR WALL DETAIL
SCALE: N.T.S.
FILE:

KEY NOTES:

1. REMOVE EXISTING WINDOW. BACK FILL WINDOW WALL OPENING. SEE DWG S-HSP-01 FOR FINISHES.
2. REMOVE EXISTING FAN. BACK FILL FAN WALL OPENING. SEE DWG S-HSP-01 FOR FINISHES.
3. REMOVE EXISTING 5KV TRANSFORMER, SWITCHGEAR 14-SB1, AND ASSOCIATED CONDUIT AND WIRING. UPON REMOVAL REPAIR DAMAGED FLOOR SURFACE.
4. TRANSFORMER WEIGHT IS ABOUT 5000 lbs WITH 200 GALLONS OF SILICONE INSULATING FLUID. TRANSFORMER HEIGHT IS ABOUT 90 INCHES. PROVIDE NECESSARY WORK, RENTAL OF SPECIAL HANDLING EQUIPMENT, MEANS AND METHODS FOR REMOVAL AND DISPOSAL OF TRANSFORMER FROM THE ROOM AND FROM THE BUILDING. SEE ADDITIONAL REQUIREMENTS AND WORK RESTRICTIONS IN SPECIFICATIONS SECTION 01140.
5. PREPARE CONCRETE FLOOR SURFACE FOR NEW FINISH. SEE DWG S-SHP-01 FOR FINISHES.
6. REMOVE WINDOW SHUTTERS. REPAIR AND PAINT WALL. SEE DWG S-HSP-01 FOR FINISHES.
7. REMOVE FAN LOUVERS. REPAIR AND PAINT WALL. SEE DWG S-HSP-01 FOR FINISHES.
8. INTERCEPT EXIST 400 AMP FEEDER CONDUITS. SEE DWGS E-SP-01 AND E-PC-01 FOR ADDITIONAL REQUIREMENTS.
9. REMOVE DAMAGED PAINT OF EXISTING RACEWAYS AND PROVIDE NEW PAINT COATING.
10. INTERCEPT EXIST 1" CONDUITS WITH BRANCH WIRING FROM PANEL 14LL40 TO FIELD INSTRUMENTS. SEE DRAWING E-PC-01 FOR NEW PULL BOX AND CONDUIT ROUTING INSIDE OF 480V ROOM.
11. REMOVE PORTION OF CONDUITS, J-BOX AND MOUNTING HARDWARE. REPAIR AND PAINT WALL. SEE DWG S-HSP-01 FOR FINISHES.
12. REMOVE EXISTING DOOR AND FRAME. REPLACE WITH NEW DOOR, FRAME, AND HARDWARE, SEE DWG S-HSP-01 FOR SPECIFICATION.
13. SEE WALL REQUIREMENTS ON DWG S-HSP-01.

REV	DATE	BY	DESCRIPTION
0	SEP - 2014	JB	ISSUED FOR BID

DESIGNED JDS
DRAWN JB
CHECKED EF
DATE SEPTEMBER, 2014
PROJECT ENGINEER

carollo®
3440 HOLLYWOOD BOULEVARD, SUITE 465
HOLLYWOOD, FLORIDA 33021
TEL: (954) 837-0030 - FAX: (954) 837-0035

pompano beach
Florida's Warmest Welcome

CITY OF POMPANO BEACH
WTP ELECTRICAL PHASE II IMPROVEMENTS
HIGH SERVICE PUMP 1-4 BUILDING
STRUCTURAL
480V ELECTRICAL ROOM FLOOR PLAN
DEMOLITION AND MODIFICATIONS

VERIFY SCALES
BAR IS ONE INCH ON ORIGINAL DRAWING
0 1"
IF NOT ONE INCH ON THIS SHEET, ADJUST SCALES ACCORDINGLY

JOB NO. 8683D.10 (II)
DRAWING NO. S-DHSP-01
SHEET NO. 8 OF 53

LAST SAVED BY: ccabrera
PROJECT NO. 8683D10 FILE NAME: 8683D10-S-HSP-01.dgn

HVAC LEGEND

- SUPPLY AIR DIFFUSER
- RETURN AIR GRILLE
- T-1 THERMOSTAT/ TYPE-1
- SD AT DUCT MOUNTED SMOKE DETECTOR.
- SUPPLY AIR DUCT RECTANGULAR CROSS SECTION
- RETURN AIR DUCT RECTANGULAR CROSS SECTION
- TURNING VANE
- INLINE VOLUME DAMPER,
- IN LINE VOLUME DAMPER, AT TAKE OFF
- SPLITTER DAMPER
- RETURN AND SUPPLY AIR
- MANUAL VOLUME DAMPER
- AHU CU AIR HANDLER UNIT/ CONDENSING UNIT.
- CONNECT TO EXISTING.

ABBREVIATIONS

BD: BALANCING DAMPER.
BDD: BACKDRAFT DAMPER.
FD: FIRE DAMPER.
FL: FLEXIBLE DUCT CONNECTOR.
RR: RETURN REGISTER OR GRILLE.
SR: SUPPLY REGISTER, GRILLE, OR DIFFUSER.

GENERAL NOTES

1. ALL WORK SHALL COMPLY WITH THE FLORIDA BUILDING CODE 2007. THE STANDARD OF THE AMERICAN SOCIETY OF HEATING, REFRIGERATING AND AIR CONDITIONING ENGINEERS, THE NATIONAL FIRE PROTECTION ASSOCIATION (NFPA) STANDARDS INCLUDING, BUT LIMITING TO, 90A AND 96.
2. VERIFY SPACE CONDITIONS AND DIMENSIONS AND COORDINATE WORK WITH ALL OTHER TRADES AT JOBSITE PRIOR TO FABRICATION AND INSTALLATION OF DUCTWORK AND EQUIPMENT.
3. SUBMIT SHOP DRAWINGS FOR ALL MECHANICAL SYSTEMS SPECIFIED ON THE CONSTRUCTION DOCUMENTS PRIOR TO PROCEEDING WITH FIELD INSTALLATION.
4. ALL DUCTWORK SHALL BE CONSTRUCTED OF ALUMINUM CONSTRUCTED IN ACCORDANCE WITH LATEST A.S.H.R.A.E. GUIDE AND S.M.A.C.N.A. RECOMMENDATIONS.
5. ALL DUCTWORK SIZES INDICATED ARE NET, INSIDE CLEAR DIMENSIONS, EXCLUSIVE OF ANY INSULATION.
6. FLAME AND SMOKE RATING: ALL INSULATION PRODUCTS USED INSIDE THE BUILDING SHALL HAVE A MAXIMUM FLAME SPREAD RATING OF 25 AND A MAXIMUM SMOKE GENERATION OF 50, IN ACCORDANCE WITH TESTS OUTLINED IN N.F.P.A. 255.
7. PROVIDE TWO (2) SETS OF TEMPORARY FIBERGLASS THROWAWAY FILTERS OF THE SAME THICKNESS AS FINAL FILTERS FOR USE DURING CONSTRUCTION.
8. VISIT PROJECT SITE PRIOR TO BID AND OBSERVE THE EXISTING FACILITIES AND CONDITIONS AT THE JOBSITE AND BECOME ACQUAINTED WITH CONDITIONS THAT WILL AFFECT WORK TO BE PERFORMED UNDER THIS CONTRACT.
9. PROVIDE ALL LABOR, MATERIALS, EQUIPMENT, PERMITS, FEES, INSPECTIONS, TESTS, INSURANCE, AMONG OTHERS, REQUIRED FOR THE EXTENSION OF DUCTWORK.

AIR DISTRIBUTION SCHEDULE

SYMBOL	USE	TYPE	ACCESSORIES	MFG. & MODEL NO.	REMARKS
SR-1	SUPPLY AIR	SIDEWALL DIFUSSER	O.B.D.	TITUS 272FL	ALUMINUM AEROBLADE DOUBLE DEFLECTION SUPPLY GRILLE, 3/4" BLADE SPACING, BLADES PARALLEL TO LONG DIMENSION.

NOTES:
1. ---.
2. MAXIMUM NOISE CRITERIA: 30/35.
3. MAXIMUM NECK VELOCITY: 500FPM.
4. DIFFUSERS AND GRILLES IN ALUMINUM CONSTRUCTION.

HVAC DESIGN REQUIRES:	YES	NO
DUCT SMOKE DETECTOR	✓	
FIRE DAMPER(S)	✓	
SMOKE DAMPER(S)		✓
FIRE RATED ENCLOSURE		✓
FIRE RATED ROOF CEILING ASSEMBLY		✓
FIRE STOPING	✓	
SMOKE CONTROL		✓
FLORIDA BUILDING CODE EXCEPTION GROUP I ONLY	SECTION 4901.4(C)	

OUTSIDE AIR CALCULATIONS - AHU-1

Application	Net Occupiable Area (SF)	Number of Persons	Outside Air Density (CFM/P)	Outside Air Density (CFM/SF)	Intermittent Occupancy Diversity (if applies)	Total Outside Air (CFM)
ELECTRICAL ROOM	1,100	---	20	--	1	150
Grand Total - Code Required Outside Air (CFM). [1]As defined in table M403.3, FBC, Mechanical, 2010						150
Grand Total - Outside Air Provided by Equipment Schedules (CFM)						150

[1]O/A HAS BEEN PROVIDED FOR BUILDING PRESSURIZATION PURPOSES

LOUVER SCHEDULE

SYMBOLS	PANEL SIZE	MANUFACTURER	MODEL SERIES	REMARKS
L-1	12" X 12" X 6"	GREENHECK	EHH-601D	MIAMI DADE APPROVED

NOTES:
PROVIDE VCD-40 DAMPER WITH MANUAL QUADRANT ACTUATORS AS REQUIRED BY MANUFACTURER
PROVIDE INSECT SCREEN.
DAMPER SHALL BE KEPT ALWAYS IN OPEN POSITION

EXISTING SPLIT AIR CONDITIONING UNIT SCHEDULE

AIR HANDLING UNIT		AIR HANDLING UNIT DESIGNATION	AHU-1	
		AREA SERVED	ELECTRICAL ROOM	
		LOCATION	UNCONDITIONED AREA	
		UNIT TYPE	DRAW THRU	
		UNIT WEIGHT, LBS.	891	
	FAN	TOTAL AIR, CFM.	7,200	
		VENT AIR, CFM MAX./MIN.	150/---	
		EXT. STATIC PRESS., IN. OF H2O	1.0	
		TYPE	FC	
		OUTLET VELOCITY, FPM	-	
		DRIVE TYPE/ MAX. FAN RPM	BELT ADJUSTABLE (B-42) / 1,750	
		MOTOR HP	5.0	
		ELECTRICAL CHARACTERISTICS Ø/Hz/V	460/3/60	
	COOLING COIL	MAX. No. OF ROWS	3	
		MAX. No. OF FINS PER IN.	14	
		AIR PRESSURE DROP, IN H20 (MAX.)	0.6	
		FACE AREA. (SQ. FT)	21.7	
		TYPE OF INDOOR COIL	LANCED	
		TOTAL CAPACITY, BTU/HR	250,200	
		SENSIBLE CAPACITY, BTU/HR	151,600	
		REGRIGERANT TYPE, # REF.CIRCUIT (SUCTION/LIQUID) (in) OD	R 410-A, 2 (1-3/8 / 5/8)	
		SUCTION TEMPERATURE °F	45	
		LIQUID TEMPERATURE °F	131	
		ENTERING AIR TEMP., °F DB/°F WB	80.3/66.8	
		LEAVING AIR TEMP., °F DB/°F WB	56.5/56.5	
	FILTER	FILTER TYPE/ EFFICIENCY	THROWAWAY/40%	
		NUMBER	8	
		P.D. INCHES H20, CLEAN/DIRTY	0.5	
		RECOMMENDED SIZE	(4) 16 x 24 x 2 / (4) 16 x 20 x 2	
		DESIGN MANUFACTURER	CARRIER	
		DESIGN MANUFACTURER MODEL	40RUA-25	
		REMARKS	SPRING ISOLATOR	
		SHIPPING DIMENSIONS (H x W x D)	76.53" x 33.75" x 95"	
CONDENSING UNIT		CONDENSING UNIT DESIGNATION	C/U-1	C/U-2
		NOMINAL CAPACITY, MBH	120.0	120.0
		AMBIENT AIR TEMP., °F	95	95
		REFRIGERANT TYPE	R 410-A	R 410-A
		SATURATED SUCTION TEMP., °F	131	131
		No. COMPRESSORS/TYPE	1/SCROLL	1/SCROLL
		COMPRESSOR RLA ea.	16.7	16.7
		COMPRESSOR LRA ea.	114	114
		CONDENSER FAN No/(HP)/FLA/RLA	1/(1)/2.5/5.8	1/(1)/2.5/5.8
		ELECTRICAL SERVICE Ø/Hz/V	460/3/60	460/3/60
		ACCESSORIES	RUBBER ISOLATORS	RUBBER ISOLATORS
		MANUFATURER	CARRIER	CARRIER
		MODEL No.	38AUZA12A	38AUZA12A
		OPERATING WEIGHT, LBS	467	467
		EER/IEER/IPLV	11.2/12.2/--	11.2/12.2/--
		SHIPPING DIMENSIONS (H x W x D)	43.49" x 53" x 40.5"	43.49" x 53" x 40.5"

REV	DATE	BY	DESCRIPTION
0	SEP - 2014	JB	ISSUED FOR BID

LAST SAVED BY:

DESIGNED EP
DRAWN JB
CHECKED EF/MAG
DATE SEPTEMBER, 2014
PROJECT ENGINEER

PROJECT NO. FILE NAME:

carollo®
3440 HOLLYWOOD BOULEVARD, SUITE 465
HOLLYWOOD, FLORIDA 33021
TEL: (954) 837-0030 - FAX: (954) 837-0035

pompano beach
Florida's Warmest Welcome

CITY OF POMPANO BEACH
WTP ELECTRICAL PHASE II IMPROVEMENTS
HIGH SERVICE PUMP 1-4 BUILDING
HVAC
NOTES AND SCHEDULES

VERIFY SCALES
BAR IS ONE INCH ON ORIGINAL DRAWING
0 1"
IF NOT ONE INCH ON THIS SHEET, ADJUST SCALES ACCORDINGLY

JOB NO. 8683D.10 (II)
DRAWING NO. H-HSP-01
SHEET NO. 9 OF 53

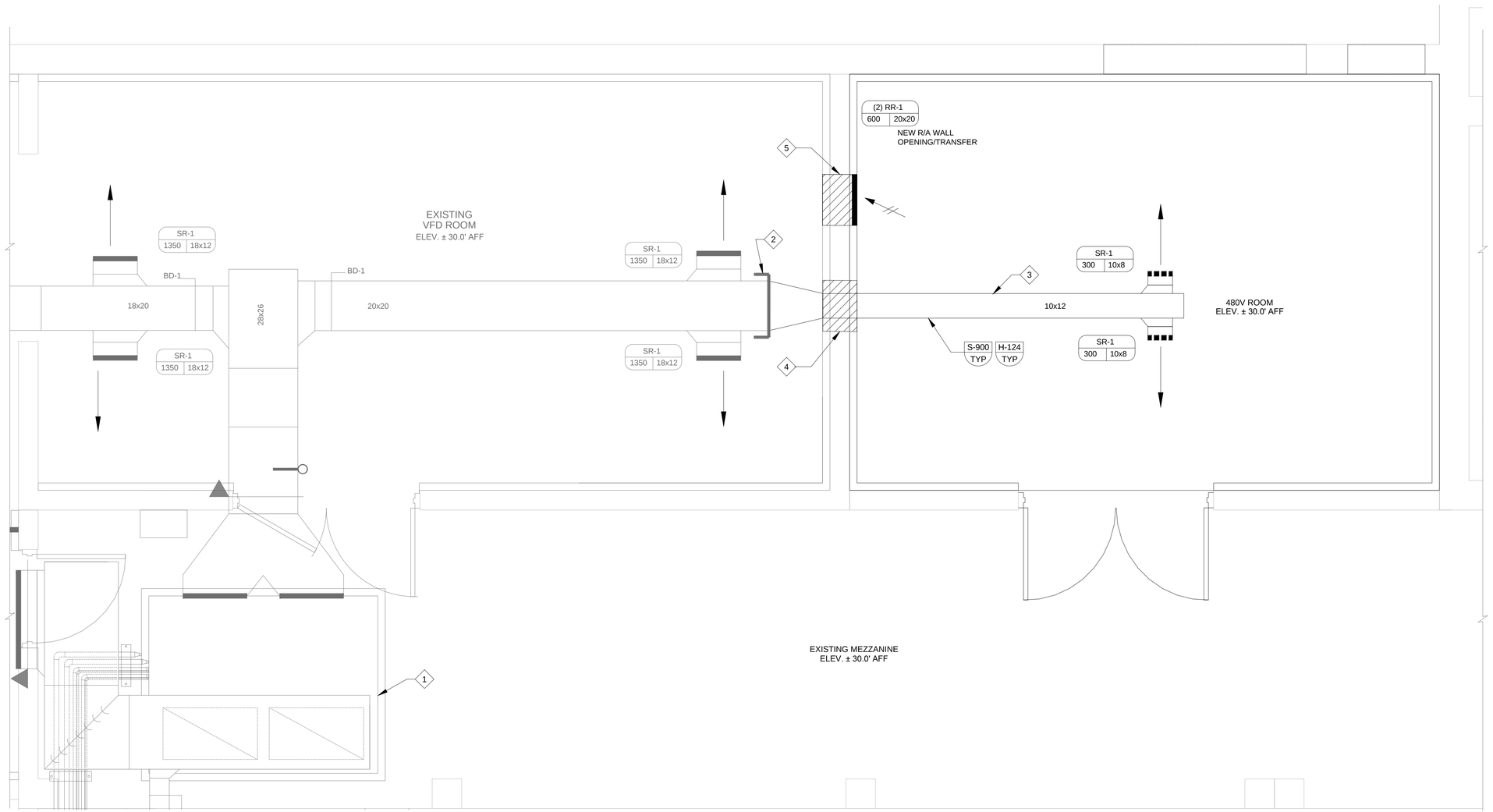

GENERAL NOTES:

1. EXISTING ELECTRICAL ROOM FLOOR AREA. EXISTING OCCUPANCY IS UNCHANGED.
2. REMODELED SPACE IS AN ELECTRICAL EQUIPMENT ROOM WITH NO PERMANENT OCCUPANTS, ONLY OCCASIONAL MAINTENANCE PERSONNEL.
3. EXISTING ROOF ABOVE NEWLY CONDITIONED SPACE, INCLUDES R-19 RIGID INSULATION.
4. EXTERIOR AND INTERIOR PERIMETER WALLS INCLUDE R-10 INSULATION.
5. DO NOT ROUTE DUCTWORK OVER ELECTRICAL EQUIPMENT IN ELECTRICAL ROOM.

KEY NOTES:

1. EXISTING AIR HANDLER UNIT-1 (20 Tons CAPACITY). ORIGINAL AHU CAPACITY INCLUDES PROVISIONS FOR COOLING ELECTRICAL EQUIPMENT ROOM.
2. REMOVE CAP AND CONNECT TO NEW DUCTWORK.
3. INSTALL DUCTWORK AS HIGH AS POSSIBLE FROM CONCRETE JOIST.
4. WALL OPENING FOR HVAC DUCTWORK. SEE DETAIL "A", SHEET T-00-T1.
5. 12" X 12" WALL OPENING FOR AIR RETURN. SEE DETAIL "A", SHEET T-00-T1.

DUCTWORK EXTENSION PLAN

SCALE: 1/2"=1'-0"
FILE: 8683D10-01-060-101

0 2' 4' 6'

REV	DATE	BY	DESCRIPTION
0	SEP - 2014	JB	ISSUED FOR BID

LAST SAVED BY:

DESIGNED EP
DRAWN JB
CHECKED TM/MAG
DATE SEPTEMBER, 2014
PROJECT ENGINEER

PROJECT NO.
FILE NAME:

carollo®
3440 HOLLYWOOD BOULEVARD, SUITE 465
HOLLYWOOD, FLORIDA 33021
TEL: (954) 837-0030 - FAX: (954) 837-0035

pompano beach
Florida's Warmest Welcome

CITY OF POMPANO BEACH
WTP ELECTRICAL PHASE II IMPROVEMENTS
HIGH SERVICE PUMP 1-4 BUILDING
HVAC
DUCTWORK EXTENSION PLAN

VERIFY SCALES
BAR IS ONE INCH ON ORIGINAL DRAWING
0 1"
IF NOT ONE INCH ON THIS SHEET, ADJUST SCALES ACCORDINGLY

JOB NO. 8683D.10 (II)
DRAWING NO. H-HSP-02
SHEET NO. 10 OF 53

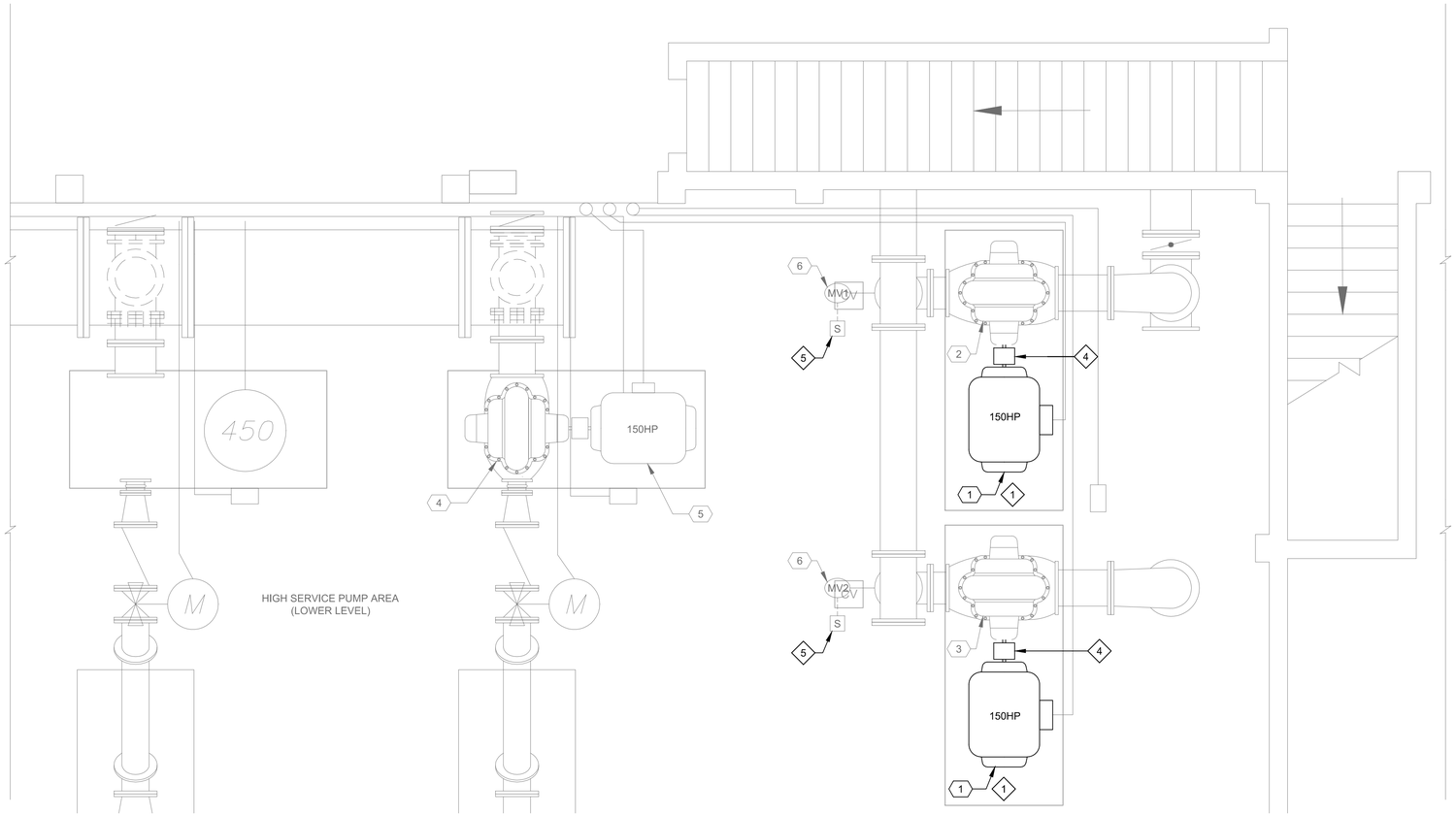

A HIGH SERVICE PUMP 1-4 BUILDING - 1ST FLOOR (PUMP ROOM)

SCALE: 3/8"=1'-0"
FILE: -

EQUIPMENT TAGS:

1. 150HP MOTOR
2. BWP No. 1, MOTOR FAIRBANKS MORSE, 1180 RPM, FRAME No. RS585S
3. BWP NO. 2, MOTOR FAIRBANKS MORSE, 1180 RPM, FRAME No. 505TS
4. HSP No. 1
5. 150HP MOTOR
6. PNEUMATIC CHECK-VALVE

KEY NOTES:

1. REPLACE EXISTING MOTOR WITH NEW 150 HP MOTOR. SEE SPEC. SECTION 11312H AND 16222.
2. PROVIDE MOTOR SUPPORT BASE AS PER NEW MOTOR FRAME DIMENSIONS, TO ALIGN NEW MOTOR WITH EXISTING PUMP.
3. EXTEND CONCRETE BASE AND SUPPORT METAL FRAME AS NECESSARY PER NEW MOTOR FRAME DIMENSIONS.
4. REMOVE EXISTING COUPLING GUARD,PROVIDE NEW COUPLING AND REPLACE GUARD WITH NEW.
5. COORDINATE WITH ELECTRICAL TRADE FOR NEW CONTROL WIRING RELATED WITH INTERLOCKS BETWEEN CHECK VALVE AND PUMP SPEED CONTROLLER (VFD).

B BACK WASH PUMP No. 1

SCALE: N.T.S.
FILE: -

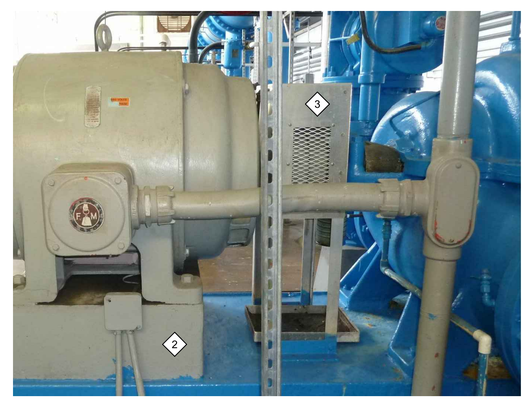

C BACK WASH PUMP No. 1 COUPLING

SCALE: N.T.S.
FILE: -

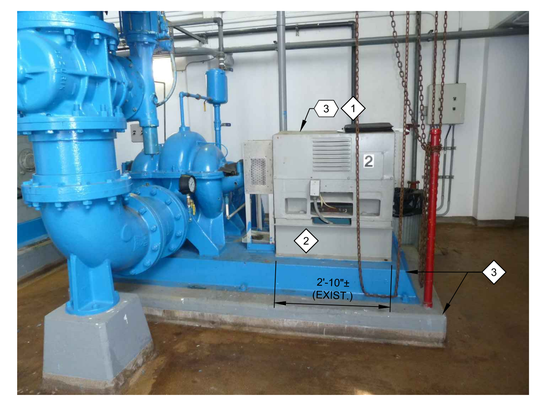

D BACK WASH PUMP No. 2

SCALE: N.T.S.
FILE: -

E BACK WASH PUMP No. 2 COUPLING

SCALE: N.T.S.
FILE: -

REV	DATE	BY	DESCRIPTION
0	SEP - 2014	JB	ISSUED FOR BID

DESIGNED MAG
DRAWN JB
CHECKED EF
DATE SEPTEMBER, 2014
PROJECT ENGINEER

carollo
3440 HOLLYWOOD BOULEVARD, SUITE 465
HOLLYWOOD, FLORIDA 33021
TEL: (954) 837-0030 - FAX: (954) 837-0035

pompano beach
Florida's Warmest Welcome

CITY OF POMPANO BEACH
WTP ELECTRICAL PHASE II IMPROVEMENTS
HIGH SERVICE PUMP 1-4 BUILDING
MECHANICAL
HIGH SERVICE PUMP 1-4 BUILDING
BW PUMPS MOTOR REPLACEMENT DETAILS

VERIFY SCALES
BAR IS ONE INCH ON ORIGINAL DRAWING
0 1"
IF NOT ONE INCH ON THIS SHEET, ADJUST SCALES ACCORDINGLY

JOB NO. 8683D.10 (II)
DRAWING NO. M-00-01
SHEET NO. 11 OF 53

LAST SAVED BY: ccabrera
PROJECT NO. 8683D10 FILE NAME: 8683D10-E-LC-01.dgn

ELECTRICAL PLAN SYMBOLS

IDENTIFICATION SYMBOLS

EQUIPMENT IDENTIFICATION

INSTRUMENT IDENTIFICATION

EQUIPMENT/INSTRUMENT LOCATOR

LUMINAIRE IDENTIFICATION
a = DEVICE SWITCHED FROM
b = CIRCUIT DESIGNATION
c = MOUNTING HEIGHT IN FEET TO BOTTOM OF FIXTURE

CONDUIT IDENTIFICATION
XXXX = CONDUIT NUMBER,
REFER TO CONDUIT SCHEDULE

INDICATES KEYNOTE 1
(PERTAINS ONLY TO SHEET WHERE NOTE IS FOUND)

OPERATOR INTERFACE STATION
1 = STATION TYPE

EQUIPMENT ENCLOSURE

GROUNDING

G — UNDERGROUND GROUND GRID #4/0 SDBC
UNLESS OTHERWISE NOTED

GROUND ROD AND GROUND WELL

EXOTHERMIC
GROUNDING CONNECTION

LUMINAIRES

2', 4', OR 8' FLUORESCENT LUMINAIRE

2' X 2' LAY-IN TROFFER
REFER TO LUMINAIRE SCHEDULE

2' X 4' LAY-IN TROFFER
REFER TO LUMINAIRE SCHEDULE

LUMINAIRE POLE MOUNTED

STROBE
a = COLOR
R = RED
G = GREEN
A = AMBER

LUMINAIRE, EMERGENCY BATTERY-POWERED

LUMINAIRE, EMERGENCY/EXIT BATTERY-POWERED

LUMINAIRE, EMERGENCY BATTERY-POWERED REMOTE

LUMINAIRE, SURFACE OR PENDANT MOUNTED

LUMINAIRE, WALL MOUNTED

LUMINAIRE, FLOOD/SPOT

LUMINAIRE, EXIT ONE OR TWO FACES AS INDICATED.
ARROW POINTS IN DIRECTION OF EGRESS.

LUMINAIRE, WALLPACK

SWITCHES/RECEPTACLES

S — SINGLE POLE SWITCH
a = DEVICE SWITCHED DESIGNATION
b = CIRCUIT DESIGNATION

S — IF c =

2 = DOUBLE POLE SWITCH
3 = THREE-WAY SWITCH
4 = FOUR-WAY SWITCH
K = KEY OPERATED SWITCH
F = SWITCH AND FUSESTAT HOLDER
P = SWITCH AND PILOT LIGHT
T = THERMOSTAT
D = DIMMER SWITCH
L = LOW VOLTAGE LIGHT SWITCH
M = MANUAL MOTOR STARTER
MD = W/ MOTION DETECTOR

OCCUPANCY SENSOR
a = CIRCUIT DESIGNATION
b = DEVICE SWITCHED DESIGNATION

SWITCH AND SINGLE RECEPTACLE
a = CIRCUIT DESIGNATION
b = DEVICE TYPE DESIGNATION
S = SWITCH AND SINGLE RECEPTACLE

DUPLEX RECEPTACLE
a = CIRCUIT DESIGNATION
b = DEVICE TYPE DESIGNATION

QUADRUPLEX RECEPTACLE
a = CIRCUIT DESIGNATION
b = DEVICE TYPE DESIGNATION

IN FLOOR DUPLEX RECEPTACLE
a = CIRCUIT DESIGNATION
b = DEVICE TYPE DESIGNATION

IN FLOOR QUADRUPLEX RECEPTACLE
a = CIRCUIT DESIGNATION
b = DEVICE TYPE DESIGNATION

DUPLEX RECEPTACLE w/SPLIT WIRE
a = CIRCUIT DESIGNATION
b = DEVICE TYPE DESIGNATION

WELDING OR APPLIANCE RECEPTACLE
a = CIRCUIT DESIGNATION
b = DEVICE TYPE DESIGNATION

WELDING RECEPTACLE
a = CIRCUIT DESIGNATION
b = DISCONNECT TYPE

SPECIAL PURPOSE RECEPTACLE
a = CIRCUIT DESIGNATION
b = DEVICE TYPE DESIGNATION

CLOCK RECEPTACLE
a = MOUNTING HEIGHT

TELEPHONE OUTLET
a = MOUNTING HEIGHT

DATA COMMUNICATIONS OUTLET
a = MOUNTING HEIGHT

DISCONNECT SWITCH

MD — MOTION DETECTOR

PE — PHOTOCELL

SD — SMOKE DETECTOR
a = TYPE
I = IONIZATION
P = PHOTOELECTRIC
d = DUCT DETECTOR

RACEWAY

EXPOSED CONDUIT

INDICATES BREAK IN CONDUIT RUN

CONDUIT HIDDEN BEHIND WALLS,
FLOORS OR OTHER STRUCTURES

UNDERGROUND CONDUIT, DIRECT BURIED
OR IN SLAB

SCREENED OR DOTTED TYPE MEANS
EXISTING.

CONDUIT VERTICAL CHANGE IN DIRECTION

PB-X — PULLBOX (X = IDENTIFICATION)

CONDUITS IN DUCT BANK

REMOVE CABLE IN EXISTING DUCT BANK

EXISTING DUCT BANK

MH-# — MANHOLE

J — JUNCTION BOX

CONDUIT SEAL

CONDUIT SIZE AND CONDUCTORS

INDIVIDUAL CONDUCTORS

W"C-(3-X (Ø), 1-#Y (N) & 1-Z (G))

W"C (WHERE INDICATED): W = CONDUIT TRADE SIZE

3-X TYPE (Ø);
3 = QUANTITY
X = SIZE OF CONDUCTORS
(Ø) = DESIGNATES PHASE CONDUCTORS

1-Y TYPE (N)(WHERE INDICATED):
1 = QUANTITY
Y = SIZE OF CONDUCTORS
(N) = DESIGNATES NEUTRAL CONDUCTORS

1-Z TYPE (G)(WHERE INDICATED):
1 = QUANTITY
Z = SIZE OF CONDUCTORS
(G) = DESIGNATES GROUND CONDUCTORS

U{3-X TYPE (Ø) & 1-X TYPE (G)}

U = NUMBER OF PARALLEL RUNS

MULTI CONDUCTOR CABLES

K/2/C#16S
K (WHERE INDICATED) = NUMBER OF PAIRS
2/C#16S = TWO CONDUCTOR, 16 GAUGE, TWISTED SHIELDED PAIR

K/3/C#16S
K (WHERE INDICATED) = NUMBER OF TRIPLETS
3/C#16S = THREE CONDUCTOR, 16 GAUGE, TWISTED SHIELDED TRIPLETS

N/CX TYPE
N = NUMBER OF CONDUCTORS IN THE CABLE
X = SIZE OF CONDUCTORS

FIBER OPTIC CABLES

FO/N
N = NUMBER OF INDIVIDUAL FIBERS

ELECTRICAL ONE-LINE SYMBOLS

MEDIUM VOLTAGE

CIRCUIT BREAKER, MEDIUM VOLTAGE
a = CIRCUIT BREAKER NUMBER
b = FRAME SIZE

MV-R / a — PROTECTIVE RELAY
ANSI RELAY DEVICE
a = ANSI DEVICE FUNCTION

MEDIUM VOLTAGE
DISCONNECT SWITCH
NON-FUSED CUT OUT

MEDIUM VOLTAGE
DISCONNECTING FUSE
SINGLE FUSE CUT OUT

MEDIUM VOLTAGE
DISCONNECTING FUSE
DOUBLE FUSE CUT OUT

C — MEDIUM VOLTAGE SINGLE FUSE

MEDIUM VOLTAGE DOUBLE FUSE

MEDIUM VOLTAGE
LIVE FRONT TERMINATOR

MEDIUM VOLTAGE ELBOW

MEDIUM VOLTAGE CONTACTOR

MEDIUM VOLTAGE STARTER

MOV-ELBOW ARRESTER

MEDIUM VOLTAGE ARRESTER

LOW VOLTAGE

LOW VOLTAGE CIRCUIT BREAKER
a = TYPE
MCP = MOTOR CIRCUIT PROTECTOR
TM = THERMAL MAGNETIC
SS = SOLID STATE
b = FRAME SIZE (MANUFACTURER TO DETERMINE FRAME SIZE UNLESS INDICATED)
c = NUMBER OF POLES
d = TRIP SETTING (AT = AMP TRIP)
(AC = MCP CONTINUOUS RATING)
e = DESIGNATION
f = INTERRUPTING RATING

LOW VOLTAGE CIRCUIT BREAKER
AUXILIARY OPERATOR
* = S = SHUNT TRIP
= K = KIRK KEY INTERLOCK
= G = GROUND FAULT INTERRUPTER
= V = SOLENOID KEY RELEASE

NON-FUSED
DISCONNECT SWITCH
a = TYPE

FUSED DISCONNECT SWITCH
a = TYPE
b = FUSE RATING

FUSE

COMBINATION STARTER
WITH CONTROL POWER TRANSFORMER
a = CIRCUIT BREAKER DISCONNECT,
TYPE AS NOTED
b = STARTER TYPE
c = NEMA STARTER SIZE
d = OVERLOAD HEATERS

d, a, c, b, LR, VFD, LL — VARIABLE FREQUENCY DRIVE
WITH FEATURES AS SHOWN
a = INPUT CONTACTOR
b = OUTPUT CONTACTOR
c = BYPASS STARTER
d = INPUT CIRCUIT BREAKER

LR — LINE REACTOR

LL — LOAD REACTOR

RVSS, BC — REDUCED VOLTAGE SOLID STATE STARTER
WITH FEATURES AS SHOWN
BC = BYPASS CONTACTOR

MISCELLANEOUS

MOTOR
HP = HORSEPOWER RATING
FULL LOAD AMPS AS NOTED

PACKAGED EQUIPMENT
LOAD RATING AS INDICATED
a = RATED LOAD
b = UNIT(HP, KW, KVA) AS INDICATED

f, g, h — TRANSFORMER
a = DEVICE I.D.
b = KVA RATING
c = NUMBER OF PHASES
d = PRIMARY VOLTAGE
e = SECONDARY VOLTAGE
f,g = CONNECTION TYPE SYMBOL
h = IMPEDANCE

GROUNDED WYE CONNECTION

DELTA CONNECTION

G — ENGINE-GENERATOR RATINGS AS INDICATED ON THE DRAWINGS
a = KVA/KW
b = VOLTAGE/CONNECTION
c = PHASE
d = WIRE
e = pf

CURRENT TRANSFORMER WITH
SHORTING TERMINAL BLOCK
a = QUANTITY
b = RATIO

c, d — POTENTIAL TRANSFORMER
a = QUANTITY
b = RATIO
c,d = CONNECTION TYPE SYMBOL

SOLID STATE
MULTIFUNCTION METER

AMPERE TEST POINT

VTP — VOLTAGE TEST POINT

UTILITY METER

LIGHTNING ARRESTER

SURGE PROTECTIVE
DEVICE

DRAWOUT CONNECTION

GROUND

CAPACITOR

BATTERY

KIRK KEY INTERLOCK

REV	DATE	BY	DESCRIPTION
0	SEP - 2014	JB	ISSUED FOR BID

DESIGNED MAG
DRAWN JB
CHECKED CA
DATE SEPTEMBER, 2014
PROJECT ENGINEER

Gamboa Engineers
17433 SW 65 CT
SOUTHWEST RANCHES, FL 33331
TEL. (954)-533-1121

carollo
3440 HOLLYWOOD BOULEVARD, SUITE 465
HOLLYWOOD, FLORIDA 33021
TEL: (954) 837-0030 - FAX: (954) 837-0035

pompano beach
Florida's Warmest Welcome

CITY OF POMPANO BEACH
WTP ELECTRICAL PHASE II IMPROVEMENTS
HIGH SERVICE PUMP 1-4 BUILDING
ELECTRICAL
LEGEND SHEET I

VERIFY SCALES
BAR IS ONE INCH ON ORIGINAL DRAWING
0 — 1"
IF NOT ONE INCH ON THIS SHEET, ADJUST SCALES ACCORDINGLY

JOB NO. 8683D.10 (II)
DRAWING NO. E-GE-01
SHEET NO. 12 OF 53

LAST SAVED BY: ccabrera

PROJECT NO. 8683D10 FILE NAME: 8683D10-E-GE-01.dgn

PROCESS SWITCHES

- FLOAT SWITCH
  CLOSE ON RISING LEVEL
- FLOAT SWITCH
  OPEN ON RISING LEVEL
- PRESSURE SWITCH
  CLOSE ON RISING PRESSURE
- PRESSURE SWITCH
  OPEN ON RISING PRESSURE
- TEMPERATURE SWITCH
  CLOSE ON RISING TEMPERATURE
- TEMPERATURE SWITCH
  OPEN ON RISING TEMPERATURE
- FLOW SWITCH
  CLOSE ON INCREASE IN FLOW
- FLOW SWITCH
  OPEN ON INCREASE IN FLOW
- VIBRATION SWITCH
  OPEN ON RISING VIBRATION
- VIBRATION SWITCH
  CLOSE ON RISING VIBRATION
- TORQUE SWITCH
  OPEN ON HIGH TORQUE
- TORQUE SWITCH
  CLOSE ON HIGH TORQUE
- N.C. LIMIT SWITCH
- N.C. HELD OPEN LIMIT SWITCH
- N.O. LIMIT SWITCH
- N.O. HELD CLOSED LIMIT SWITCH

HAND SWITCHES

- N.O. MOMENTARY PUSHBUTTON
- N.C. MOMENTARY PUSHBUTTON
- xoo — THREE POSITION SELECTOR SWITCH
  x - DENOTES POSITION CONTACTS CLOSED IN
- xo — TWO POSITION SELECTOR SWITCH
  x - DENOTES POSITION CONTACTS CLOSED IN
- MUSHROOM HEAD PUSHBUTTON
- PUSH-PULL PUSHBUTTON
  MAINTAINED CONTACT
- xox — PADLOCK SWITCH
  x - DENOTES POSITION CONTACTS CLOSED IN
- PULL CORD SWITCH
- STOP-LOCKOUT PUSHBUTTON
- xoo — SPRING-RETURN
  x - DENOTES POSITION CONTACTS CLOSED IN

PILOT LIGHTS

- a — PILOT LIGHT
  a = LENS COLOR
  R = RED
  G = GREEN
  W = WHITE
  A = AMBER
- a

RELAYS

- a (b, c, d) — RELAY COIL
  a = TYPE
  CR - CONTROL RELAY
  TD - TIME DELAY RELAY
  M - MOTOR STARTER COIL
  L - MOTOR STARTER COIL - LOW SPEED
  H - MOTOR STARTER COIL - HIGH SPEED
  F - MOTOR STARTER COIL - FORWARD
  R - MOTOR STARTER COIL - REVERSE

  b = TDON - TIME DELAY ON ENERGIZATION
  TDOFF - TIME DELAY ON DEENERGIZATION

  c = TIMING RANGE/SETTING
  d = DESCRIPTION
- N.O. CONTROL CONTACT
- N.C. CONTROL CONTACT
- NOTC — TIME DELAY SWITCH
  N.O. DELAY CLOSING
- NCTO — TIME DELAY SWITCH
  N.C. DELAY OPENING
- NOTO — TIME DELAY SWITCH
  N.O. DELAY OPENING
- NCTC — TIME DELAY SWITCH
  N.C. DELAY CLOSING

TERMINAL BLOCKS

- TERMINAL
  IN PLC/PCM PANEL
- TERMINAL
  IN MOTOR CONTROL CENTER
- TERMINAL
  IN LOCAL STARTER CONTROL PANEL
- TERMINAL
  AT FIELD DEVICE
- TERMINAL
  IN FIELD PANEL
- * — DIGITAL BUS CONNECTOR
  * = D - DEVICENET
  * = PA- PROFIBUS PA
  * = DP- PROFIBUS DP
  * = H1- FOUNDATION FIELDBUS H1
  * = H2- FOUNDATION FIELDBUS H2

I/O

- a — PLC DISCRETE
  a = INPUT OR OUTPUT AS INDICATED
- ANALOG a — PLC ANALOG
  a = INPUT OR OUTPUT AS INDICATED
- DIGITAL BUS — DIGITAL BUS

MISC

- SOLENOID
- M — METER UNIT
  M = TYPE
- HP — MOTOR
- CIRCUIT BREAKER
- DISCONNECT
- FUSE
- TRANSIENT SURGE PROTECTION
- MWH-* — MOTOR WINDING HEATER
  * - MOTOR TAG I.D.
- SPACE HEATER
- VARISTOR
- CAPACITOR
- RESISTOR
- BATTERY
- DIODE
- MOTOR OVERLOAD HEATERS
- OVERLOAD CONTACT
- DRAWOUT CONNECTION
- GROUND
- LIGHTNING ARRESTOR
- H1 H3 H2 H4 / X1 X2 — CONTROL POWER TRANSFORMER
- KI-* ETM — ELAPSED TIME METER

REV	DATE	BY	DESCRIPTION
0	SEP - 2014	JB	ISSUED FOR BID

DESIGNED MAG
DRAWN JB
CHECKED CA
DATE SEPTEMBER, 2014
PROJECT ENGINEER

Gamboa Engineers
17433 SW 65 CT
SOUTHWEST RANCHES, FL 33331
TEL. (954)-533-1121

carollo
3440 HOLLYWOOD BOULEVARD, SUITE 465
HOLLYWOOD, FLORIDA 33021
TEL: (954) 837-0030 - FAX: (954) 837-0035

pompano beach
Florida's Warmest Welcome

CITY OF POMPANO BEACH
WTP ELECTRICAL PHASE II IMPROVEMENTS
HIGH SERVICE PUMP 1-4 BUILDING
ELECTRICAL
LEGEND SHEET II

VERIFY SCALES
BAR IS ONE INCH ON ORIGINAL DRAWING
0 1"
IF NOT ONE INCH ON THIS SHEET, ADJUST SCALES ACCORDINGLY

JOB NO. 8683D.10 (II)
DRAWING NO. E-GE-02
SHEET NO. 13 OF 53

LAST SAVED BY: ccabrera
PROJECT NO. 8683D10 FILE NAME: 8683D10-E-GE-02.dgn

ABBREVIATIONS

A	AMP
AAP	ALARM ANNUNCIATOR PANEL
ABAN	ABANDON
ABCB	AIR BLAST CIRCUIT BREAKER
ABS	ABSOLUTE
ABSW	AIR BREAK SWITCH
ABT	AIR BLAST TRANSFORMER
AC	ALTERNATING CURRENT
ACB	AIR CIRCUIT BREAKER
ACK	ACKNOWLEDGE
ACP - X	AREA/AUXILIARY CONTROL PANEL NO. X
ACTR	ACTUATOR
ADDL	ADDITIONAL
ADDM	ADDENDUM
AF	AMP FRAME
AFC	AUTOMATIC FREQUENCY CONTROL
AHC	AUTO-HOLD-CLOSED
AHM	AMPERE HOUR METER
AIC	AMP INTERRUPTING CAPACITY
AM	AMMETER
AMB	AMBIENT
ANN	ANNUNCIATOR
ANT	ANTENNA
APU	AUXILIARY POWER UNIT
ARM	ARMORED CABLE
AS	AMMETER SWITCH
ASU	AIR SUPPLY UNIT
ASYM	ASYMMETRICAL
AT	AMP TRIP
ATO	AUTOMATIC THROW OVER
ATP	AMMETER TEST POINT
ATS	AUTOMATIC TRANSFER SWITCH
AUTO XFMR	AUTOMATIC TRANSFORMER
AUX	AUXILIARY
AWG	AMERICAN WIRE GAGE
B	BELL
BAT	BATTERY
BCT	BUSHING CURRENT TRANSFORMER
BDCT	BUS DIFFERENTIAL CURRENT TRANSFORMER
BFG	BELOW FINISHED GRADE
BHP	BRAKE HORSEPOWER
BKR	BREAKER
BPD	BUSHING POTENTIAL DEVICE
BRF	BELOW RAISED FLOOR
C	CONDUIT / CONTINUOUS LOAD
C-A-M	COMPUTER-AUTO MANUAL
CB	CIRCUIT BREAKER
CC	CONTROL CABLE
CCS	CENTRAL CONTROL SYSTEM
CCT	CONTROL CIRCUIT TRANSFORMER
CCTV	CLOSED CIRCUIT TELEVISION
CCW	COUNTER CLOCKWISE
CFP	CHEMICAL FEED PUMP
CKT	CIRCUIT
C-M	COMPUTER MANUAL
CO	CUT OFF SWITCH
COAX	COAXIAL CABLE
COEF	COEFFICIENT
COM	COMMON
COMM	COMMUNICATION
CPT	CONTROL POWER TRANSFORMER
CP - X	CONTROL PANEL DESIGNATION X
CR - X	CONTROL RELAY DESIGNATION X
CS	CONTROL SWITCH
CT	CURRENT TRANSFORMER
CTC	CURRENT TRANSFORMER CABINET
CTRL	CONTROL
CV	CONTROL VALVE
CW	CLOCKWISE / COOL WHITE
CWX	COOL WHITE DELUXE
DC	DIRECT CURRENT
DCS	DISTRIBUTED CONTROL SYSTEM
DCU - X	DISTRIBUTED CONTROL UNIT NO. X
DD	DELAY UPON DE-ENERGIZING
DE	DELAY UPON ENERGIZING
DEEN	DE-ENERGIZE
DEMO	DEMOLITION
DEV	DEVIATION
DISC	DISCONNECT SWITCH
DIV	DIVISION
DM	DEMAND METER
DPDT	DOUBLE POLE DOUBLE THROW
DPST	DOUBLE POLE SINGLE THROW
DS	DOOR SWITCH
DW	DELUXE WHITE
DX	DIRECT EXPANSION

E/G	EMERGENCY GENERATOR
E.C.	ELECTRICAL CONTRACTOR
EM	EMERGENCY
EMF	ELECTROMOTIVE FORCE
EMT	ELECTRICAL METALLIC TUBING
EN	ENERGIZED
ENAM	ENAMEL
ENCL	ENCLOSURE
ENG	ENGINE
ENT	ELECTRICAL NON-METALLIC TUBING
EP	EXPLOSION PROOF
ESD	EMERGENCY STOP DEPRESSED
ESR	EMERGENCY STOP RELAY
ETM	ELAPSED TIME METER
F	SUBFED LOAD
FA	FIRE ALARM
FACP	FIRE ALARM CONTROL PANEL
FBO	FURNISHED BY OTHERS
FC	FOOTCANDLE / FAIL CLOSED
FDR	FEEDER
FLA	FULL LOAD AMPS
FLP	FAIL TO LAST POSITION
FLUOR	FLUORESCENT
FLX	FLEXIBLE CONDUIT
FM	FREQUENCY MODULATION / FLOOR MOUNTED
FO	FAIL OPEN / FIBER OPTIC
F-O-S	FAST-OFF-SLOW
F-O-S-A	FAST-OFF-SLOW-AUTO
F-O-S-R	FAST-OFF-SLOW-REMOTE
FP - X	FIELD PANEL NO. X
FRC	FIBERGLASS RIGID CONDUIT
FREQ	FREQUENCY
FS	FLOAT SWITCH
FU	FUSE
FU SW	FUSED SWITCH
FUT	FUTURE
FVNR	FULL VOLTAGE NON-REVERSING
FVR	FULL VOLTAGE REVERSING
FWD	FORWARD
G	GROUND / EQUIPMENT GROUND / GROUND FAULT
GEN	GENERATOR
GRC	GALVANIZED RIGID CONDUIT
GFCI	GROUND FAULT CIRCUIT INTERRUPTER (RECEPTACLE)
GFE	GFI EQUIPMENT BREAKER (30mA)
GFP	GFI PERSONNEL BREAKER (5mA)
GFI	GROUND FAULT INTERRUPTER (BREAKER)
GFR	GROUND FAULT RELAY
GS	GOVERNOR SWITCH
H	HOT-LEG
HF	HIGH FREQUENCY
Hg	MERCURY
HID	HIGH INTENSITY DISCHARGE
HO	HIGH OUTPUT
H-O-A	HAND-OFF-AUTO
H-O-R	HAND-OFF-REMOTE
HORIZ	HORIZONTAL
HP	HORSEPOWER
HPF	HIGH POWER FACTOR
HPS	HIGH PRESSURE SODIUM
HR	HOUR
HS	HAND OPERATED SELECTOR SWITCH
HSTAT	HUMIDISTAT
HV	HIGH VOLTAGE
HVAC	HEATING/VENTILATION/AIR CONDITIONING
HZ	HERTZ
I	INTERMITTENT LOAD / INSTANTANEOUS
IC	INTERRUPTING CAPACITY
IGN	IGNITION
IJB	INSTRUMENT JUNCTION BOX
IMC	INTERMEDIATE METAL CONDUIT
INCAND	INCANDESCENT
INST	INSTANTANEOUS
INSTR	INSTRUMENT
INT	INTERLOCK
INTERCOM	INTERCOMMUNICATION
IW#	IN WALL (#-INCHES AFF OR AFG)
IWP	IN WALL WEATHERPROOF
J	JUNCTION BOX
K	KEY INTERLOCK
KA	KILOAMP
KV	KILOVOLT
KVA	KILOVOLT AMPERE
KVAR	KILOVAR (REACTANCE)
KW	KILOWATT
KWD	KILOWATT DEMAND
KWH	KILOWATT HOUR

L	LONG-TIME
L-B	LINE-BUS
L-G	LINE-GROUND
L1, L2, L3	LIGHTING PANEL BRANCH CIRCUIT
LA	LIGHTNING ARRESTOR
LB	POUND
LBL	LABEL
LC	LIGHTING CONTACT OR
LCP- X	LOCAL CONTROL PANEL NO. X
LDR	LOADING RELAY
LEL	LOWER EXPLOSIVE LIMIT
LL	LEAD-LAG LOAD REACTOR
LLCO	LOW LEVEL CUT-OFF
LOR	LOCAL-OFF-REMOTE
LOS	LOCK-OUT STOP
LP	LIGHT POLE
LP - X	LIGHTING PANEL NO. X
LR	LATCHING RELAY LINE REACTOR
LRA	LOCKED ROTOR AMPS
LS	LIMIT SWITCH
LTG	LIGHTING
LV	LOW VOLTAGE
LVL	LEVEL
M-X	MOTOR CONTROLLER NO. X
MA	MILLIAMPERE
MAN	MANUAL
MATV	MASTER ANTENNA TELEVISION SYSTEM
MAX	MAXIMUM
MC	MODULATE-CLOSE
MCA	MOTOR CIRCUIT AMPS
MCB	MAIN CIRCUIT BREAKER
MCC - X	MOTOR CONTROL CENTER NO. X
MCP	MOTOR CIRCUIT PROTECTOR
MERC	MERCURY VAPOR
M/G	MOTOR GENERATOR
MGO	MAGNETICALLY OPERATED
MH	MANHOLE / MOUNTING HEIGHT
MLO	MAIN LUGS ONLY
MO	MANUALLY OPERATED
MOD	MOTOR OPERATED DAMPER
MOT	MOTOR
MOV	METAL OXIDE VARISTOR
MPR	MOTOR PROTECTION RELAY
MS-X	MOTOR STARTER NO. X
MSP	MOTOR STARTING PANEL
MTO	MANUAL THROW OVER
MTR-X	MOTOR NO. X
MTS	MANUAL TRANSFER SWITCH
MV	MEGAVOLT
MVA	MEGAVOLT-AMPERES
MW	MEGAWATT
MWH	MOTOR WINDING HEATER
N	NEUTRAL / NORTH / NITROGEN
NC	NORMALLY CLOSED
NCTO	NORMALLY CLOSED TIMED OPEN
NEC	NATIONAL ELECTRICAL CODE
NEG	NEGATIVE
NEUT	NEUTRAL
NFC	NONMETALLIC FLEXIBLE CONDUIT
NIC	NOT IN CONTRACT
N-J	NORMAL-JOG
NL	NIGHT LIGHT
NO	NORMALLY OPEN
NOTC	NORMALLY OPEN TIMED CLOSED
NP	NAMEPLATE
O	OPEN OR OPENED
O-C	OPEN-CLOSE
O-C-A	OPEN-CLOSE-AUTO
OCB	OIL CIRCUIT BREAKER
OCR	OIL CIRCUIT RECLOSER
OH	OVERHEAD
OHGW	OVERHEAD GUY WIRE
OL	OVERLOAD RELAY
O-O	ON-OFF
O-O-A	ON-OFF-AUTO
O-O-R	ON-OFF-REMOTE
OPT	OPTIONAL
O-R	OFF-REMOTE
O-S-C	OPEN-STOP-CLOSE
P	POLE
PA	PUBLIC ADDRESS
PB	PUSHBUTTON / PULL BOX
PCP - X	PUMP CONTROL PANEL NO. X
PCS	PVC COATED GALVANIZED STEEL CONDUIT
PCM	PROCESS CONTROL MODULE
PE	PHOTOCELL
PF	POWER FACTOR
PFC	POWER FACTOR CORRECTION CAPACITOR
PFR	PHASE FAILURE RELAY
PH	PHASE
PNL	PANEL
PPX	POWER PANEL NO. X
PRI	PRIMARY
PS	PRESSURE SWITCH
PT	POTENTIAL TRANSFORMER
PVC	POLYVINYL CHLORIDE RIGID PLASTIC CONDUIT
PWR	POWER

RAC	RIGID ALUMINUM CONDUIT
R - X	RESISTOR OR POTENTIOMETER NO. X
RECPT	RECEPTACLE
REV	REVERSE
RF	RADIO FREQUENCY
RH	RELATIVE HUMIDITY
RM - X	REMOTE MODULE NO. X
R-O-A	REMOTE-ON-AUTO
RS	RAPID START
RVAT	REDUCED VOLTAGE AUTO TRANSFORMER
RVNR	REDUCED VOLTAGE NON-REVERSING
RVSS	REDUCED VOLTAGE SOLID STATE
S	SHIELD / SHORT-TIME
S/A	SURGE ARRESTER
SDBC	SOFT DRAWN BARE COPPER
SEC	SECOND
S-F	SLOWER-FASTER
SFL	SUB FEED LUGS
SIG	SIGNAL
SLT	SEALTIGHT LIQUIDTIGHT FLEXIBLE CONDUIT
SM	SURFACE MOUNTED
SP	SINGLE POLE
SPD	SURGE PROTECTIVE DEVICE
SPDT	SINGLE POLE DOUBLE THROW
SPST	SINGLE POLE SINGLE THROW
SPKR	SPEAKER
S-S	START-STOP
SS	SOLID STATE
SSC	SUPERVISORY SET POINT CONTROL
STB	SHORTING TERMINAL BLOCK
SV	SOLENOID VALVE
SW	SWITCH
SWBD	SWITCHBOARD
SWGR	SWITCHGEAR
SYM	SYMBOL
SYS	SYSTEM
TACH	TACHOMETER
TB - X	TERMINAL BLOCK - UNIT X
TC	THERMOCOUPLE / TIME CLOCK / TRAY CABLE
TD	TEMPERATURE DETECTOR RELAY
TDR	TIME DELAY RELAY
TE	TOTALLY ENCLOSED
TEFC	TOTALLY ENCLOSED FAN COOLED
TEMP	TEMPORARY
TENV	TOTALLY ENCLOSED NON-VENTILATED
TERM	TERMINAL
TJB	TERMINAL JUNCTION BOX
TM	THERMAL MAGNETIC
TOT	TOTAL
TP	TWISTED PAIR
TS	TEMPERATURE SWITCH
TS1W	TWO SPEED CONSEQUENT POLE, ONE WINDING
TS2W	TWO SPEED SEPARATE WINDING
TSTAT	THERMOSTAT
TU OR TURB	TURBIDITY
UHF	ULTRA HIGH FREQUENCY
UNG	UNGROUNDED
UPS	UNINTERRUPTABLE POWER SUPPLY
UVR	UNDER VOLTAGE RELAY
V	VOLT
VA	VOLT AMPERE
VAR	VARMETER
VB	VACUUM BREAKER
VCO	VOLTAGE CONTROLLED OSCILLATOR
VCP	VENDOR CONTROL PANEL
VEL	VELOCITY
VFD	VARIABLE FREQUENCY DRIVE
VHF	VERY HIGH FREQUENCY
VHO	VERY HIGH OUTPUT
VM	VOLTMETER
VP	VAPORPROOF
VR	VOLTAGE REGULATOR
VS	VOLTMETER SWITCH
VT	VOLTAGE TRANSFORMER
VTP	VOLTAGE TEST POINT
W	WATT / WEST
WHD	WATTHOUR DEMAND METER
WHM	WATTHOUR METER
WM	WATTMETER
WT	WATER TIGHT
WP	WEATHER PROOF
XFMR	TRANSFORMER
ZS	POSITION SWITCH

NOTES:

1. REFER TO OTHER DRAWINGS FOR ADDITIONAL ABBREVIATIONS.

ANSI STANDARD POWER DEVICE FUNCTION NUMBERS

1	MASTER ELEMENT
2	TIME-DELAY STARTING OR CLOSING RELAY
3	CHECKING OR INTERLOCKING RELAY
4	MASTER CONTACTOR
5	STOPPING DEVICE
6	STARTING CIRCUIT BREAKER
7	ANODE CIRCUIT BREAKER
8	CONTROL POWER DISCONNECTING DEVICE
9	REVERSING DEVICE
10	UNIT SEQUENCE SWITCH
11	RESERVED FOR FUTURE APPLICATION
12	OVER-SPEED DEVICE
13	SYNCHRONOUS-SPEED DEVICE
14	UNDER-SPEED DEVICE
15	SPEED OR FREQUENCY MATCHING DEVICE
16	RESERVED FOR FUTURE APPLICATION
17	SHUNTING OR DISCHARGE SWITCH
18	ACCELERATING OR DECELERATING DEVICE
19	STARTING-TO-RUNNING TRANSITION CONTACTOR
20	ELECTRICALLY OPERATED VALVE
21	DISTANCE RELAY
22	EQUALIZER CIRCUIT BREAKER
23	TEMPERATURE CONTROL DEVICE
24	RESERVED FOR FUTURE APPLICATION
25	SYNCHRONIZING OR SYNCHRONISM-CHECK DEVICE
25A	AUTOMATIC SYNCHRONIZING RELAY
26	APPARATUS THERMAL DEVICE
27	UNDERVOLTAGE RELAY
27N	GROUND FAULT UNDERVOLTAGE RELAY
28	FLAME DETECTOR
29	ISOLATING CONTACTOR
30	ANNUNCIATOR RELAY
31	SEPARATE EXCITATION DEVICE
32	DIRECTIONAL POWER RELAY
33	POSITION SWITCH/CELL SWITCH
34	MASTER SEQUENCE DEVICE
35	BRUSH-OPERATING OR SLIP-RING SHORT-CIRCUITING DEVICE
36	POLARITY OR POLARIZING VOLTAGE DEVICE
37	UNDERCURRENT OR UNDERPOWER RELAY
38	BEARING PROTECTIVE DEVICE
39	MECHANICAL CONDITION MONITOR
40	FIELD RELAY
41	FIELD CIRCUIT BREAKER
42	RUNNING CIRCUIT BREAKER
43	MANUAL TRANSFER OR SELECTOR DEVICE
44	UNIT SEQUENCE STARTING RELAY
45	ATMOSPHERIC CONDITION MONITOR
46	REVERSE-PHASE OR PHASE-BALANCE CURRENT RELAY
46N	NEGATIVE SEQUENCE OVERCURRENT RELAY
47	PHASE-SEQUENCE VOLTAGE RELAY
47N	NEGATIVE SEQUENCE VOLTAGE RELAY
48	INCOMPLETE SEQUENCE RELAY
49	MACHINE OR TRANSFORMER THERMAL RELAY
49/50	MOTOR THERMAL & INSTANTANEOUS RELAY
50	INSTANTANEOUS OVERCURRENT OR RATE-OF-RISE RELAY
50BF	BREAKER FAILURE RELAY
50GS	GROUND SENSOR INSTANTANEOUS OVERCURRENT RELAY
50/51	PHASE TIME & INSTANTANEOUS OVERCURRENT RELAY
51	AC TIME OVERCURRENT RELAY
51B	PHASE TIME OVERCURRENT RELAY
51G	GROUND TIME OVERCURRENT RELAY
51N	RESIDUALLY CONNECTED TIME OVERCURRENT RELAY
51NB	RESIDUALLY CONNECTED TIME OVERCURRENT RELAY
51/27C	VOLTAGE CONTROLLED TIME OVERCURRENT
51/27R	VOLTAGE RESTRAINED TIME OVERCURRENT
52	AC CIRCUIT BREAKER
53	EXCITER OR DC GENERATOR RELAY
54	RESERVED FOR FUTURE APPLICATION
55	POWER FACTOR RELAY
56	FIELD APPLICATION RELAY
57	SHORT-CIRCUITING OR GROUNDING DEVICE
58	RECTIFICATION FAILURE RELAY
59	OVERVOLTAGE RELAY
59N	GROUND FAULT OVERVOLTAGE RELAY
59/81	VOLTS PER HERTZ OVEREXCITATION RELAY
60	VOLTAGE OR CURRENT BALANCE RELAY
61	RESERVED FOR FUTURE APPLICATION
62	TIME-DELAY STOPPING OR OPENING RELAY
63	PRESSURE SWITCH
64	GROUND PROTECTIVE RELAY
65	GOVERNOR
66	NOTCHING OR JOGGING DEVICE
67	AC DIRECTIONAL OVERCURRENT RELAY
68	BLOCKING RELAY
69	PERMISSIVE CONTROL DEVICE
70	RHEOSTAT
71	LEVEL SWITCH
72	DC CIRCUIT BREAKER
73	LOAD-RESISTOR CONTACTOR
74	ALARM RELAY
75	POSITION CHANGING MECHANISM
76	DC OVERCURRENT RELAY
77	PULSE TRANSMITTER
78	PHASE-ANGLE MEASURING OR OUT-OF-STEP PROTECTIVE RELAY
79	AC RECLOSING RELAY
80	FLOW SWITCH
81	FREQUENCY RELAY
82	DC RECLOSING RELAY
83	AUTOMATIC SELECTIVE CONTROL OR TRANSFER RELAY
84	OPERATING MECHANISM
85	CARRIER OR PILOT-WIRE RECEIVER RELAY
86	LOCKOUT RELAY
86M	MOTOR LOCKOUT RELAY
87	DIFFERENTIAL PROTECTIVE RELAY
87M	MOTOR DIFFERENTIAL RELAY
87T	HIGH SPEED TRANSFORMER DIFFERENTIAL RELAY
87TG	TRANSFORMER GROUND DIFFERENTIAL RELAY
88	AUXILIARY MOTOR OR MOTOR GENERATOR
89	LINE SWITCH
90	REGULATING DEVICE
91	VOLTAGE DIRECTIONAL RELAY
92	VOLTAGE AND POWER DIRECTIONAL RELAY
93	FIELD-CHANGING CONTACTOR
94	TRIPPING OR TRIP-FREE RELAY
95, 96, 97, 98, 99	USED ONLY FOR SPECIFIC APPLICATIONS IN INDIVIDUAL INSTALLATIONS WHERE NONE OF THE ASSIGNED NUMBERED FUNCTIONS FROM 1 TO 94 ARE SUITABLE.

COMMONLY USED SUFFIX LETTERS APPLIED TO ANSI STANDARD POWER DEVICE FUNCTION NUMBERS

A	ALARM ONLY
B	BUS PROTECTION
G	GROUND FAULT PROTECTION (RELAY CT IN A SYSTEM NEUTRAL CIRCUIT OR GENERATOR PROTECTION)
GS	GROUND FAULT PROTECTION (RELAY CT IN TOROIDAL OR GROUND SENSOR TYPE)
L	LINE PROTECTION
M	MOTOR PROTECTION
N	GROUND FAULT PROTECTION (RELAY COIL CONNECTED IN RESIDUAL CT CIRCUIT)
T	TRANSFORMER PROTECTION
V	VOLTAGE

REV	DATE	BY	DESCRIPTION
0	SEP - 2014	JB	ISSUED FOR BID

DESIGNED MAG
DRAWN JB
CHECKED CA
DATE SEPTEMBER, 2014
PROJECT ENGINEER

LAST SAVED BY: ccabrera

Gamboa Engineers
17433 SW 65 CT
SOUTHWEST RANCHES, FL 33331
TEL. (954)-533-1121

carollo
3440 HOLLYWOOD BOULEVARD, SUITE 465
HOLLYWOOD, FLORIDA 33021
TEL: (954) 837-0030 - FAX: (954) 837-0035

pompano beach
Florida's Warmest Welcome

CITY OF POMPANO BEACH
WTP ELECTRICAL PHASE II IMPROVEMENTS
HIGH SERVICE PUMP 1-4 BUILDING
ELECTRICAL
ABBREVIATIONS

VERIFY SCALES
BAR IS ONE INCH ON ORIGINAL DRAWING
0 1"
IF NOT ONE INCH ON THIS SHEET, ADJUST SCALES ACCORDINGLY

JOB NO. 8683D.10 (II)
DRAWING NO. E-GE-03
SHEET NO. 14 OF 53

PROJECT NO. 8683D10 FILE NAME: 8683D10-E-GE-02.dgn

PANEL - 12PP1

LOCATION: FIRST FLOOR (WALKWAY TO HSP PUMP 1-4 ROOM) NEMA: 1 - GASK
VOLTS: 480 FEED: TOP
PHASE & WIRE: 3PH 3W MTG. SURFACE
AIC RATING: 35K AIC BUS RATING: 250A
MAIN CB: 250A ESTIMATED LOAD KVA 78 KVA

I/C/F	DESCRIPTION	LOAD (KVA)	BKR	CIR	Ø	CIR	BKR	LOAD (KVA)	DESCRIPTION	I/C/F
		0		1	A	2		0		
	CL2 PUMP	0	50A-3P	3	B	4	20A-3P	0	CL2 PUMP	
		0		5	C	6		0		
		8		7	A	8		5		
	45 KVA TRANSFORMER - PANEL	8	50A-3P	9	B	10	70A-3P	5	CRANE	
		8		11	C	12		5		
		4		13	A	14		4		
	PANEL 12LL10	4	50A-3P	15	B	16	70A-3P	4	SOUTH - CO2 TANK	
		4		17	C	18		4		
		4		19	A	20		-		
	12LL10 (15 KVA TRANSFORMER)	4	30A-3P	21	B	22	20A-3P	-	SPARE	
		4		23	C	24		-		
		1		25	A	26		-		
	MAIN GATE	1	20-3P	27	B	28	20A-3P	-	SPARE	
		1		29	C	30		-		
	SPACE			25	A	26			SPACE	
	SPACE			27	B	28			SPACE	
	SPACE			29	C	30			SPACE	
	SPACE			31	A	32			SPACE	
	SPACE			33	B	34			SPACE	
	SPACE			35	C	36			SPACE	

PANEL - 14PP1

LOCATION: ELECTRICAL ROOM (AT MEZZANINE) NEMA: 1
VOLTS: 480 FEED: TOP
PHASE & WIRE: 3PH 3W MTG. SURFACE
AIC RATING: 35K AIC BUS RATING: 400A
MAIN CB: 250A ESTIMATED LOAD KVA 174 KVA

I/C/F	DESCRIPTION	LOAD (KVA)	BKR	CIR	Ø	CIR	BKR	LOAD (KVA)	DESCRIPTION	I/C/F
		11		1	A	2		1.5		
	PANEL 14PP1A	11	70A-3P	3	B	4	15A-3P	1.5	PUMP RM EXHAUST FAN	
		11		5	C	6		1.5		
		2.5		7	A	8		2		
	VACUUM PUMP	2.5	15A-3P	9	B	10	15A-3P	2	A.H.U.-1	
		2.5		11	C	12		2		
		5		13	A	14		3		
	AIR CONDITIONING	5	30A-3P	15	B	16	15A-3P	3	COMPRESSOR TEST	
		5		17	C	18		3		
		12		19	A	20		11		
	CU1 & CU2 FEEDER	12	100A-3P	21	B	22	70A-3P	11	SURFACE SWEEP PUMP	
		12		23	C	24		11		
		10		25	A	26			SPACE	
	10 T1	10	70A-3P	27	B	28			SPACE	
		10		29	C	30			SPACE	
	SPACE			31	A	32			SPACE	
	SPACE			33	B	34			SPACE	
	SPACE			35	C	36			SPACE	
	SPACE			37	A	38			SPACE	
	SPACE			39	B	40			SPACE	
	SPACE			41	C	42			SPACE	

GENERAL NOTES:

1. REPLACE EXISTING PANELBOARDS.
2. THE SIZE OF BRANCH CIRCUIT WIRING SHALL MATCH EXISTING.
3. ASSUME THAT ADDITIONAL NECESSARY BRANCH WIRE SIZE SHALL CARRY THE CIRCUIT BREAKER CURRENT RATING, AND CONDUITS SIZES ACCORDING TO NEC CODE.

PANEL - PP1

LOCATION: ELECTRICAL ROOM (AT MEZZANINE) NEMA: 1
VOLTS: 120/208 FEED: TOP
PHASE & WIRE: 3PH 4W MTG. SURFACE
AIC RATING: 18K AIC BUS RATING: 225A
MAIN CB: 150A ESTIMATED LOAD KVA 40 KVA

I/C/F	DESCRIPTION	LOAD (KVA)	BKR	CIR	Ø	CIR	BKR	LOAD (KVA)	DESCRIPTION	I/C/F
		-		1	A	2		1.5		
	SPARE	-	15A-3P	3	B	4	15A-3P	1.5	ELECTRIC CHLORINE HOIST	
		-		5	C	6		1.5		
		-		7	A	8		1.0		
	SPARE	-	15A-3P	9	B	10	15A-3P	1.0	SUMP PUMP IN PUMP ROOM	
		-		11	C	12		1.0		
		2.0		13	A	14		1.0		
	AIR CONDITIONING N.E. WALL IN GEN. ROOM (2A)	2.0	15A-3P	15	B	16	15A-3P	1.0	SUMP PUMP IN PUMP ROOM	
		2.0		17	C	18		1.0		
		5.0		19	A	20		0.8		
	PANEL IN PIPE GALLERY AND CONSOLE ROOM	5.0	15A-3P	21	B	22	100A-3P	0.8	OFFICE PANEL	
		5.0		23	C	24		0.8		
	SPACE			25	A	26			SPACE	
	SPACE			27	B	28			SPACE	
	SPACE			29	C	30			SPACE	
	SPACE			25	A	26			SPACE	
	SPACE			27	B	28			SPACE	
	SPACE			29	C	30			SPACE	
	SPACE			31	A	32			SPACE	
	SPACE			33	B	34			SPACE	
	SPACE			35	C	36			SPACE	
	SPACE			37	A	38			SPACE	
	SPACE			39	B	40			SPACE	
	SPACE			41	C	42			SPACE	

PANEL B

LOCATION: PIPE GALLERY WALL (MEZZANINE LEVEL) NEMA: 1
VOLTS: 120 / 208 FEED: TOP
PHASE & WIRE: 3PH 4W MTG. SURFACE
AIC RATING: 18K AIC BUS RATING: 100A
MAIN CB: 100A ESTIMATED LOAD KVA 10.5

I/C/F	DESCRIPTION	LOAD (KVA)	BKR	CIR	Ø	CIR	BKR	LOAD (KVA)	DESCRIPTION	I/C/F
	OVERHEAD PIPE GALLERY LIGHTS	1.0	20A-1P	1	A	2	20A-1P	0.2	WEST END PUMP ROOM LIGHT	
	OVERHEAD GALLERY LIGHTS ON 3 WAY	1.0	20A-1P	3	B	4	20A-1P	0.5	NORTH WALL CAL LIGHTS PUMP ROOM	
	HALL LIGHTS BY PANEL & ELECTRICAL ROOM WALK WAY	1.0	20A-1P	5	C	6	20A-1P	0.5	NORTH WALL CAL LIGHTS PUMP ROOM	
	LIGHTS EAST END PUMP ROOM	0.5	20A-1P	7	A	8	20A-1P	0.5	TELEPHONE ROOM LIGHTS	
	LIGHTS SOUTH WALL CAL PUMP ROOM	0.5	20A-1P	9	B	10	20A-1P	0.3	AUTOMATIC FILTER CONTROL	
	LIGHTS SOUTH WALL CAL PUMP ROOM	0.5	20A-1P	11	C	12	20A-1P	-	SPARE	
	4 DUPLEX RECP. PIPE GALLERY & OUTLET UNDER PANEL	0.8	20A-1P	13	A	14	20A-1P	0.5	DUPLEX RECEPT. ELECTRIC AND GENER. ROOM	
	LIGHTS PIPE GALLERY UNDER WATER FLUME & N ST LIGHT	0.5	20A-1P	15	B	16	20A-1P	0.6	LIGHTS, ELEC. RM. & 2 WEST OUTSIDE LIGHTS	
	CLEARWELL LEVEL	0.3	20A-1P	17	C	18	20A-1P	0.75	5 DUPLEX RECEP. PUMP ROOM & WATER COOLER	
	SPACE			19	A	20	20A-1P	0.5	FITQ	
	SPACE			21	B	22			SPACE	
	SPACE			23	C	24			SPACE	
	SPACE			25	A	26			SPACE	
	SPACE			27	B	28			SPACE	
	SPACE			29	C	30			SPACE	

PANEL 14LL40

LOCATION: ELECTRICAL ROOM (AT MEZZANINE) NEMA: 1
VOLTS: 120/208 FEED: TOP
PHASE & WIRE: 3PH 4W MTG. SURFACE
AIC RATING: 18K AIC BUS RATING: 225A
MAIN: 150A ESTIMATED LOAD KVA 36.5 KVA

I/C/F	DESCRIPTION	LOAD (KVA)	BKR	CIR	Ø	CIR	BKR	LOAD (KVA)	DESCRIPTION	I/C/F
	SAMPLE PUMP #1	2	20A-1P	1	A	2	20A-1P	1	OUTSIDE LIGHTS AND RECEPTACLES	
	SAMPLE PUMP #2	2	20A-1P	3	B	4	20A-1P	1	STARTER ROOM LIGHTS AND RECEPTACLES	
	RECEPTACLE	0.2	20A-1P	5	C	6	20A-1P	1.5	MCC ROOM LIGHTS AND RECEPTACLES	
	AIT-493	0.15	20A-1P	7	A	8	20A-1P	0.3	SM DETECT MCC/STARTER ROOMS SD-1,2,3	
	LIGHTS	2	20A-1P	9	B	10	20A-1P	2	480V ROOM LIGHTS	
	FIT-494	0.2	20A-1P	11	C	12	20A-1P	-	SPARE	
	SPACE			13	A	14		8		
	SPACE			15	B	16	100A-3P	8	PANEL B	
	SPACE			17	C	18		8		
	SPACE			19	A	20			SPACE	
	SPACE			21	B	22			SPACE	
	SPACE			23	C	24			SPACE	
	SPACE			25	A	26			SPACE	
	SPACE			27	B	28			SPACE	
	SPACE			29	C	30			SPACE	

REV	DATE	BY	DESCRIPTION
0	SEP - 2014	JB	ISSUED FOR BID

DESIGNED MAG
DRAWN JB
CHECKED CA
DATE SEPTEMBER, 2014
PROJECT ENGINEER

Gamboa Engineers
17433 SW 65 CT
SOUTHWEST RANCHES, FL 33331
TEL. (954)-533-1121

carollo
3440 HOLLYWOOD BOULEVARD, SUITE 465
HOLLYWOOD, FLORIDA 33021
TEL: (954) 837-0030 - FAX: (954) 837-0035

pompano beach
Florida's Warmest Welcome

CITY OF POMPANO BEACH
WTP ELECTRICAL PHASE II IMPROVEMENTS
HIGH SERVICE PUMP 1-4 BUILDING
ELECTRICAL
PANEL SCHEDULES

VERIFY SCALES
BAR IS ONE INCH ON ORIGINAL DRAWING
0 1"
IF NOT ONE INCH ON THIS SHEET, ADJUST SCALES ACCORDINGLY

JOB NO. 8683D.10 (II)
DRAWING NO. E-GE-04
SHEET NO. 15 OF 53

LAST SAVED BY: jnewberry
PROJECT NO. 8683D10 FILE NAME: 8683D10-E-GE-04.dgn

LUMINAIRE SCHEDULE

6/23/2014

ITEM	DESCRIPTION	MOUNTING METHOD	LAMP QUANTITY	LAMP TYPE	LUMINAIRE SPECIFICATIONS MANUFACTURER	CATALOG	VOLTS	VA
A	4' NON-METALLIC, SEALED, AND GASKETED FLUORESCENT SUITABLE FOR WET LOCATIONS w/ELECTRONIC HIGH OUTPUT BALLAST	CEILING MOUNT OR SUSPENDED AS NEEDED	8	2-F32W/T8/TL841/XL SILVER BROAD BEAM REFLECTOR	HOLOPHANE	HESSO4SBBBNO42YP1U	120	80
B	4' NON-METALLIC, SEALED, AND GASKETED FLUORESCENT SUITABLE FOR WET LOCATIONS w/ELECTRONIC HIGH OUTPUT BALLAST w/BATTERY BACKUP	CEILING MOUNT OR SUSPENDED AS NEEDED	1	2-F32W/T8/TL841/XL SILVER BROAD BEAM REFLECTOR	HOLOPHANE	HESSO4XBBBN042YP11-BPAK50 BDL500	120	80
C	DELEON NM SINGLE FACE EXIT SIGN UL DAMP LOCATION LISTED DUAL VOLTAGE 120/277 w/GREEN EXIT LETTERS SELF-CONTAINED, SEALED MAINTENANCE FREE 6V BATTERIES	WALL OR CEILING MOUNT	1	LED	HOLOPHANE	LNME-D-NC-G-SG-S-N-DL	120	10

MANHOLE / PULL BOX SCHEDULE

MANHOLE / PULL BOX NO.	INTERIOR DIMENSION L X W X D	TYPE	VOLTAGE	LOCATION DWG	COMMENT	NOTES
MH-1	4' x 4' x 4'	CONCRETE	5 KV	E-SP-01	EXISTING	-
MH-2	4' x 4' x 4'	CONCRETE	5 KV	E-SP-01	EXISTING	-
MH-3	4' x 4' x 4'	CONCRETE	5 KV	E-SP-01	EXISTING	-
MH-4	4' x 4' x 4'	CONCRETE	5 KV	E-SP-01	EXISTING	-
MH-5	4' x 4' x 4'	CONCRETE	5 KV	E-SP-02	EXISTING	-
MH-6	4' x 4' x 4'	CONCRETE	5 KV	E-SP-02	EXISTING	-
MH-7	4' x 4' x 4'	CONCRETE	5 KV	E-SP-01	EXISTING	-
MH-8	4' x 4' x 4'	CONCRETE	5 KV	E-SP-01	EXISTING	-
MH-10	7' x 6' x 7'	CONCRETE	5 KV	E-SP-01	EXISTING	-
PB-A	24"H x 24"W x 12"D	NEMA 3R	5 KV	E-PC-10	EXISTING	-
PB-B	48"H x 36"W x 18"D	NEMA 4X	5 KV	E-SP-04	EXISTING	NOTE 2
PB-C	48"H x 36"W x 18"D	NEMA 4X	5 KV	E-PC-01	EXISTING	NOTE 2
PB-D	48"H x 36"W x 18"D	NEMA 4X	5 KV	E-PC-01	EXISTING	NOTE 2
PB-E	30"H x 24"W x 12"D	NEMA 4X	5 KV	E-PC-01	EXISTING	NOTE 2
PB-F	12"H x 12"W x 10"D	NEMA 4X	480 V	E-PC-01	EXISTING	NOTE 2
PB-G	30"H x 24"W x 12"D	NEMA 4X	480 V	E-PC-01	EXISTING	NOTE 2
HH2	36"H x36"W x 30"D	CONCRETE	480 V	E-SP-02	EXISTING	-
PB-(20PP1)-B	30"H x 24"W x 18"D	NEMA 4X	480 V	-	NEW	NOTE 1
PB-H	36"H x 30"W x 24"D	NEMA 4X	480 V	E-PC-01	NEW	NOTE 1
PB-(20PP1)-A	36"H x 36"W x 18"D	NEMA 4X	480 V	E-PC-01	NEW	-
PB-M	36"H x 24"W x 18"D	NEMA I	480 V	E-PC-04	NEW	-
PB-N	36"H x 24"W x 18"D	NEMA 4X	480 V	E-PC-04	NEW	NOTE 1
PB-Q	36"H x 24"W x 18"D	NEMA 1	480 V	E-PC-04	NEW	-
PB-R	36"H x 24"W x 18"D	NEMA I	480 V	E-PC-04	NEW	-
PB-P1	36"H x 24"W x 18"D	NEMA I	480 V	E-PC-01	NEW	-
PB-P2	18"H x 12"W x 12"D	NEMA I	480 V	E-PC-01	NEW	-
PB-P3	24"H x 18"W x 18"D	NEMA I	480 V	E-PC-01	NEW	-
PB-P4	24"H x 18"W x 18"D	NEMA I	480 V	E-PC-01	NEW	-
PB-P5	24"H x 18"W x 18"D	NEMA I	480 V	E-PC-02	NEW	-
PB-P6	18"H x 18"W x 12"D	NEMA 4X	240 V	E-PC-01	NEW	NOTE 1
PB-P7	30"H x 24"W x 18"D	NEMA I	480 V	E-PC-02	NEW	-
PB-S1	12"H x 12"W x 10"D	NEMA I	24 V	E-PC-01	NEW	-

NOTES:

1. PAINTED WHITE AT FACTORY
2. PAINTED WHITE IN THE FIELD

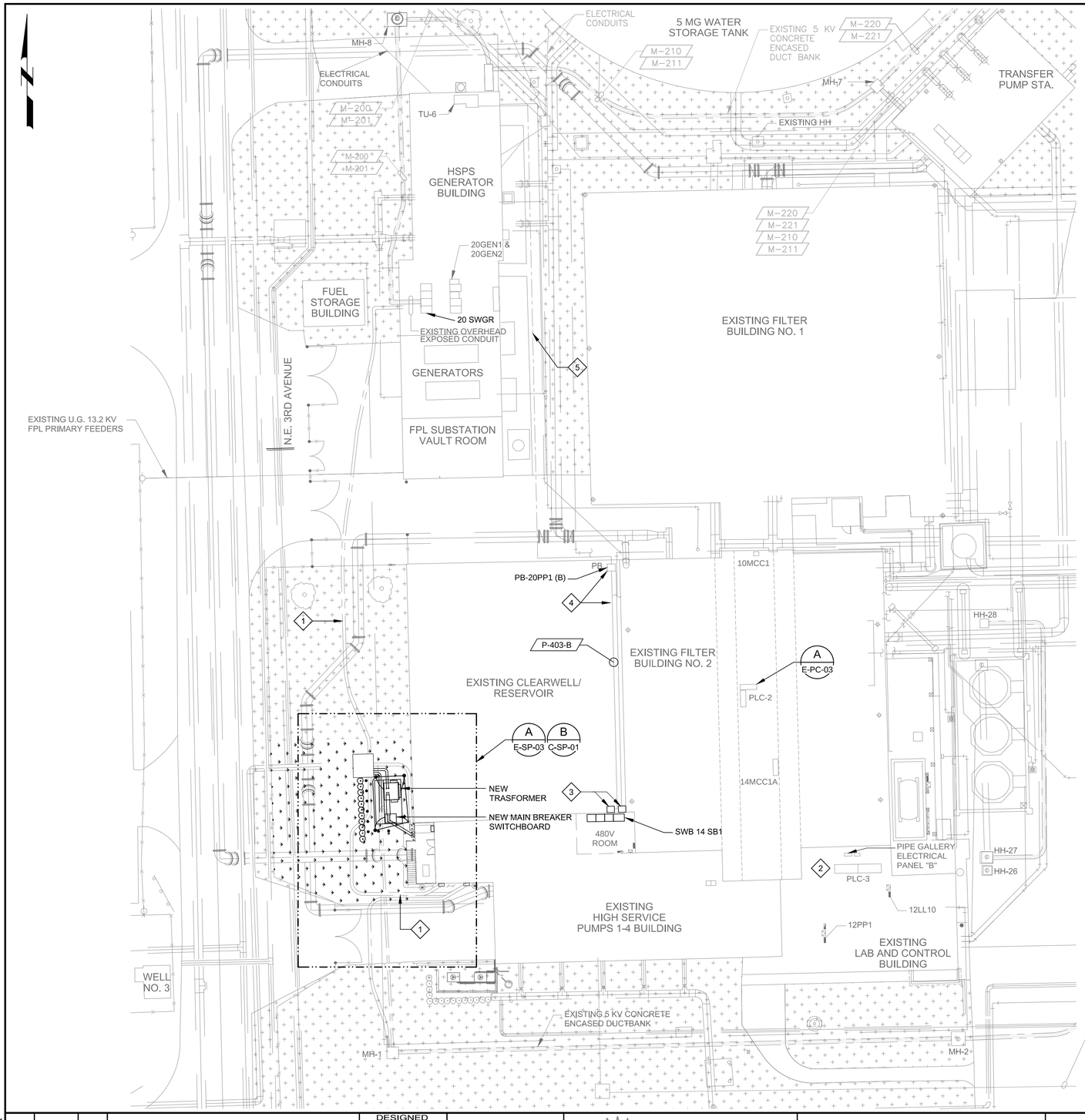

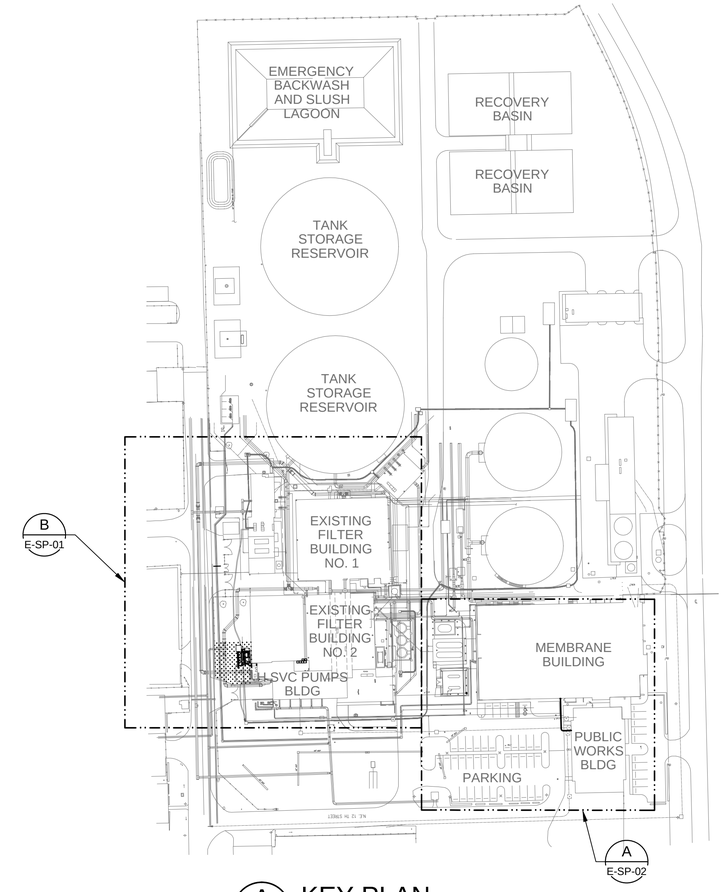

A KEY PLAN

SCALE: 1"=100'
FILE: 8683D10-01-010-101,8683D10-010-901,8683D10-010-904

0 50' 100' 200'

B PARTIAL SITE PLAN - HSP BUILDING AREA

SCALE: 1"=20'
FILE: 8683D10-01-010-101,8683D10-010-901,8683D10-010-904

0 10' 20' 40'

EXISTING FEEDERS TO PUBLIC WORKS BUILDING (SEE DWG E-SP-02 FOR CONTINUATION)

GENERAL NOTES:

1. POT HOLE AND VERIFY ALL EXISTING UNDERGROUND UTILITIES PRIOR TO EXCAVATING NEW TRENCH

KEY NOTES:

1. EXISTING DUCT BANK.
2. SEE DRAWING E-PC-02 FOR CONDUIT AND WIRING TO EXIST PLC-3 CABINET.
3. SEE DWG S-DHSP-01 (PHOTO E - DETAIL) AND DWG E-PC-01 FOR REQUIRED WORK.
4. REMOVE DAMAGED PAINT OF EXISTING RACEWAYS AND PROVIDE NEW PAINT COATING.
5. APPROXIMATE ROUTING OF UNDERGROUND POWER CONDUITS, THAT INTERCONNECTS SWB-14SB1 WITH SWB-20PP1 EXACT LOCATION IS UNKNOWN. (SHOWN FOR INFORMATION ONLY)

REV	DATE	BY	DESCRIPTION
0	SEP - 2014	JB	ISSUED FOR BID

DESIGNED MAG
DRAWN JB
CHECKED CA
DATE SEPTEMBER, 2014
PROJECT ENGINEER

Gamboa Engineers
17433 SW 65 CT
SOUTHWEST RANCHES, FL 33331
TEL. (954)-533-1121

carollo
3440 HOLLYWOOD BOULEVARD, SUITE 465
HOLLYWOOD, FLORIDA 33021
TEL: (954) 837-0030 - FAX: (954) 837-0035

pompano beach
Florida's Warmest Welcome

CITY OF POMPANO BEACH
WTP ELECTRICAL PHASE II IMPROVEMENTS
HIGH SERVICE PUMP 1-4 BUILDING
ELECTRICAL
HSP BUILDING AREA
PARTIAL SITE PLAN

VERIFY SCALES
BAR IS ONE INCH ON ORIGINAL DRAWING
0 1"
IF NOT ONE INCH ON THIS SHEET, ADJUST SCALES ACCORDINGLY

JOB NO. 8683D.10 (II)
DRAWING NO. E-SP-01
SHEET NO. 17 OF 53

LAST SAVED BY: ccabrera
PROJECT NO. 8683D10 FILE NAME: 8683D10-E-SP-01.dgn

KEY NOTES:

1. EXISTING CONDUITS AND CONDUCTORS FROM HSP 1-4 BUILDING (SWB-14SB1) TO SWB-PW1.
2. NEW DUCT BANK WITH FEEDER FROM MEMBRANE BLDG SWB-MF1 TO SWB-PW1.

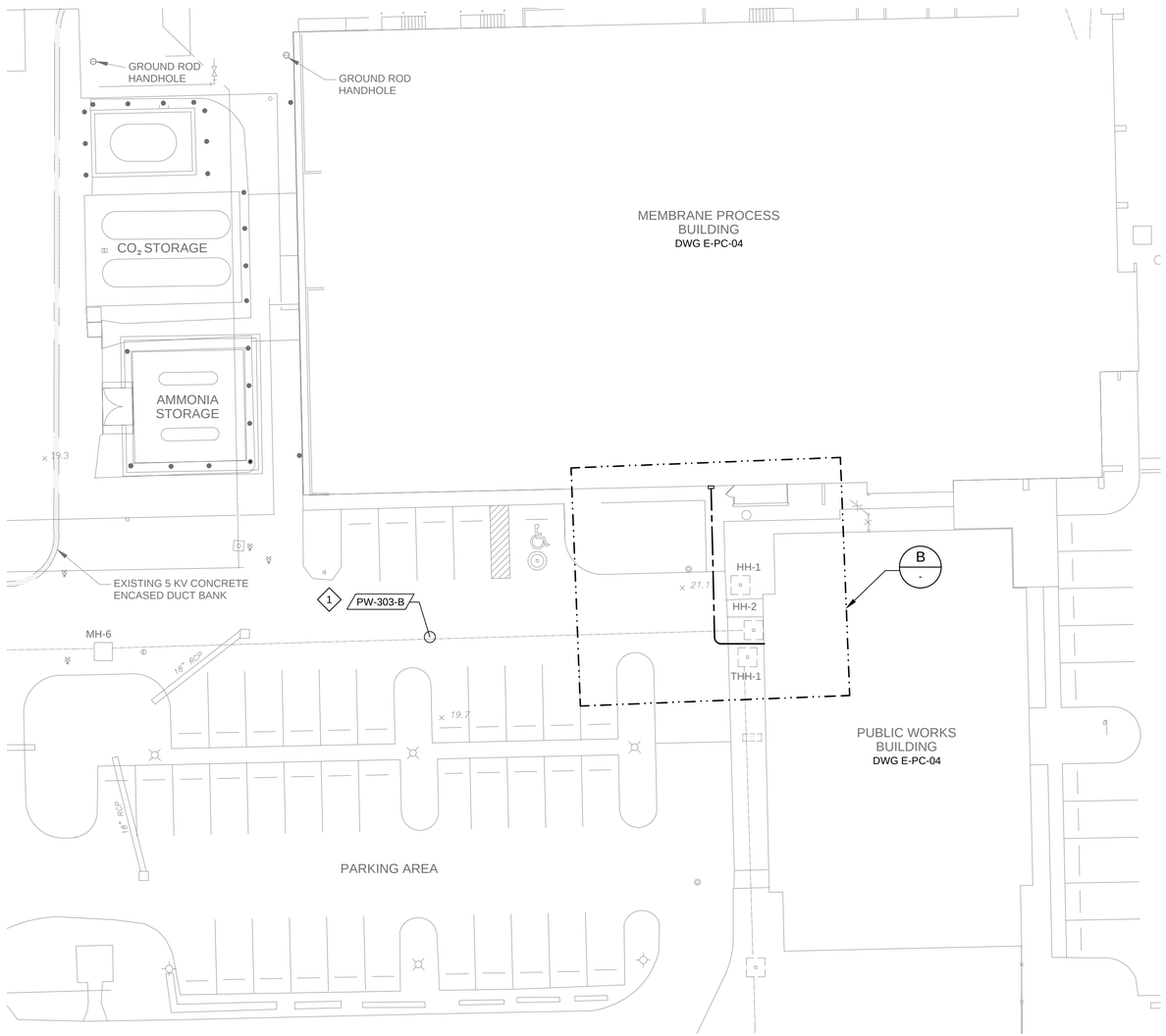

A - PARTIAL SITE PLAN - PUBLIC WORKS BUILDING AREA

SCALE: 1"=20'
FILE: 8683D10-01-010-101,8683D10-010-901,8683D10-010-904

0 10' 20' 40'

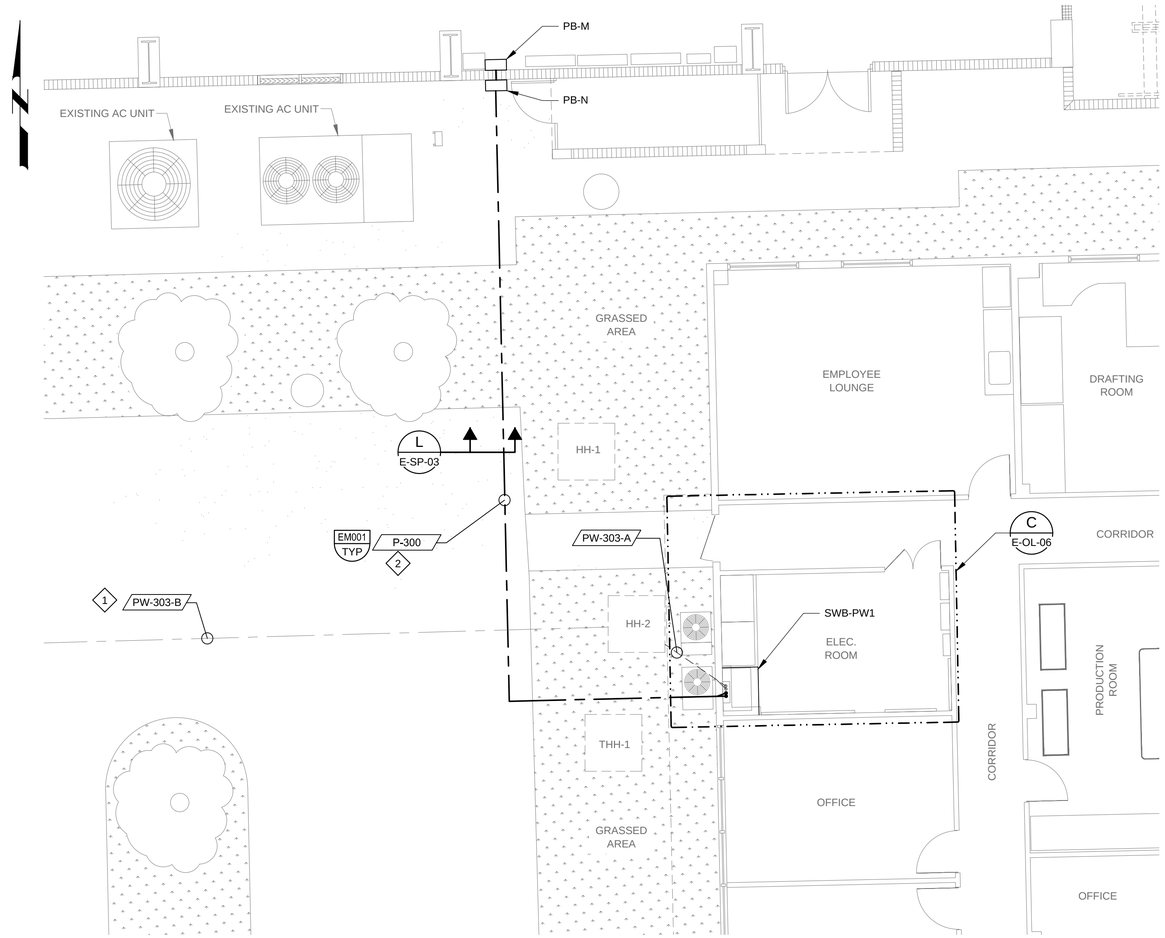

B - PARTIAL GROUND LEVEL PLAN - PUBLIC WORKS BUILDING

SCALE: 3/16"=1'-0"
FILE:

REV	DATE	BY	DESCRIPTION
0	SEP - 2014	JB	ISSUED FOR BID

DESIGNED MAG
DRAWN JB
CHECKED CA
DATE SEPTEMBER, 2014
PROJECT ENGINEER

Gamboa Engineers
17433 SW 65 CT
SOUTHWEST RANCHES, FL 33331
TEL. (954)-533-1121

carollo
3440 HOLLYWOOD BOULEVARD, SUITE 465
HOLLYWOOD, FLORIDA 33021
TEL: (954) 837-0030 - FAX: (954) 837-0035

pompano beach
Florida's Warmest Welcome

CITY OF POMPANO BEACH
WTP ELECTRICAL PHASE II IMPROVEMENTS
HIGH SERVICE PUMP 1-4 BUILDING
ELECTRICAL
PUBLIC WORKS BUILDING AREA
PARTIAL SITE PLAN

VERIFY SCALES
BAR IS ONE INCH ON ORIGINAL DRAWING
0 1"
IF NOT ONE INCH ON THIS SHEET, ADJUST SCALES ACCORDINGLY

JOB NO. 8683D.10 (II)
DRAWING NO. E-SP-02
SHEET NO. 18 OF 53

LAST SAVED BY: ccabrera
PROJECT NO. 8683D10 FILE NAME: 8683D10-E-SP-01.dgn

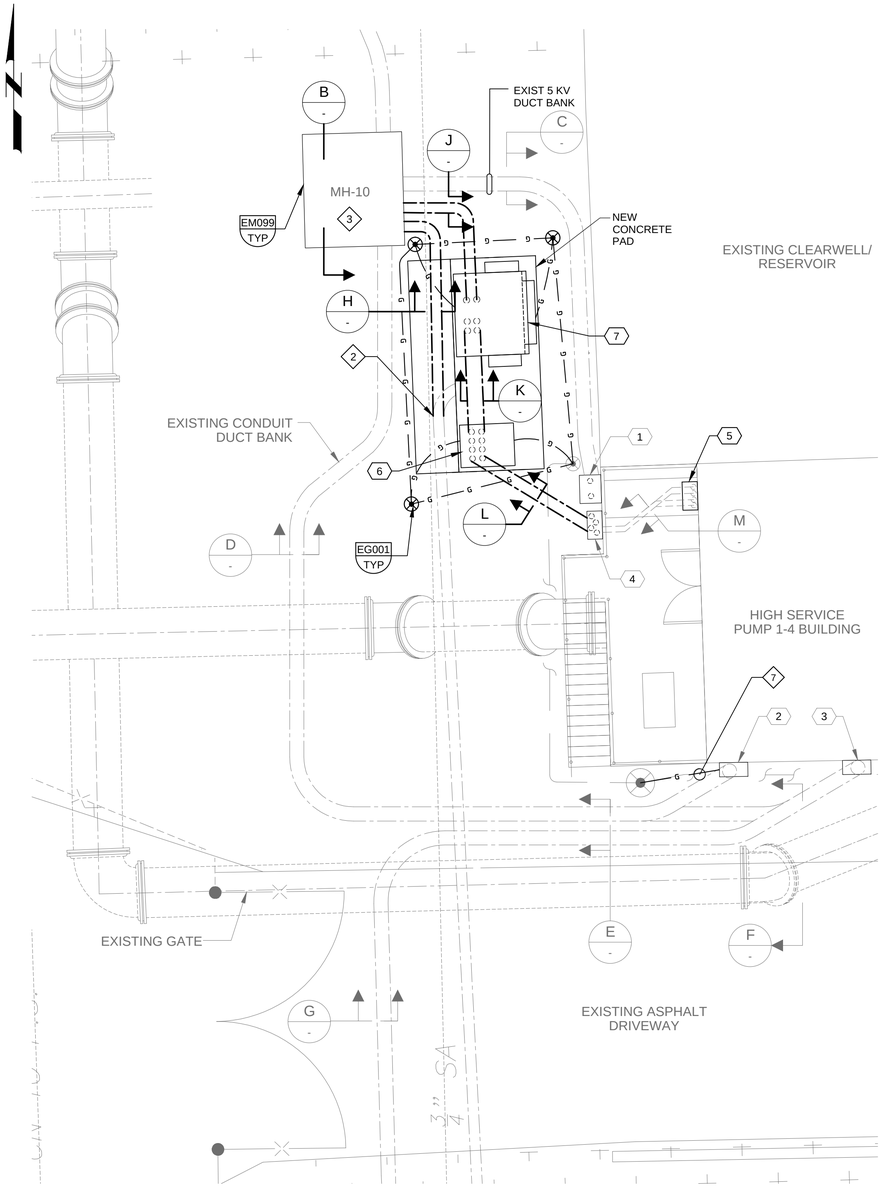

A - PARTIAL SITE PLAN
SCALE: 3/16"=1'-0"
FILE:

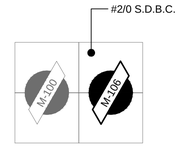

C - DUCT BANK SECTION
SCALE: NTS
FILE: -

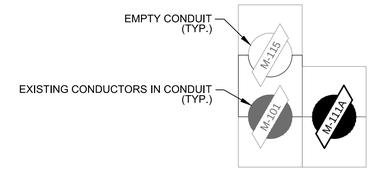

D - DUCT BANK SECTION
SCALE: NTS
FILE: -

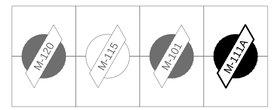

E - DUCT BANK SECTION
SCALE: NTS
FILE: -

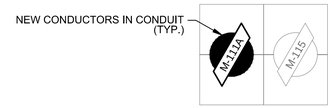

F - DUCT BANK SECTION
SCALE: NTS
FILE: -

G - DUCT BANK SECTION
SCALE: NTS
FILE: -

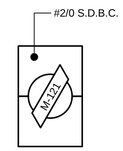

H - DUCT BANK SECTION
SCALE: NST
FILE: -

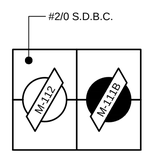

J - DUCT BANK SECTION
SCALE: NTS
FILE: -

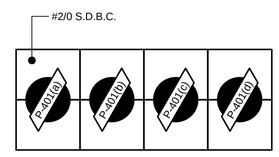

K - DUCT BANK SECTION
SCALE: NTS
FILE: -

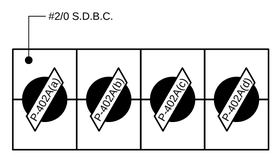

L - DUCT BANK SECTION
SCALE: NTS
FILE: -

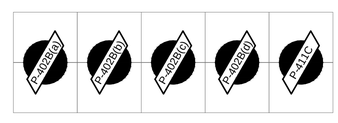

M - DUCT BANK SECTION
SCALE: NTS
FILE: -

B - MANHOLE 10 (PHOTO)
SCALE:
FILE:

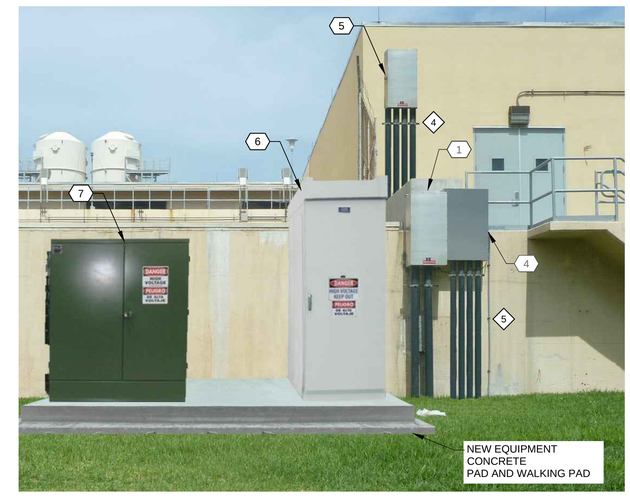

N - PULL BOX AND CONDUIT STUB-UPS (PHOTO)
SCALE:
FILE:

KEY NOTES:

1. CORE DRILL MANHOLE WALL FOR NEW DUCTBANK.
2. INTERCEPT EXIST. 4"C. AND EXTEND TO MH-10 ENCASED IN CONCRETE.
3. PROVIDE ADDITIONAL NEW CABLE RACKS IN EXISTING MANHOLE.
4. PROVIDE NEW CONDUITS FROM EXISTING CONDUITS STUB-OUTS TO NEW PULL BOX.
5. PROVIDE AND INSTALL NEW CONDUITS FROM NEW SWITCHBOARD TO EXISTING PULL BOX.
6. PROTECT EXISTING 5 KV "ENERGIZED" CABLES PRIOR TO PERFORM WORK.
7. ADDITIONAL #4/0 GROUNDING CONDUCTOR FROM EXISTING 5 KV MCC-B TO GROUND ROD.

EQUIPMENT TAGS:

1. PB-C, EXISTING, PROVIDE WHITE COATING
2. PB-D, EXISTING, PROVIDE WHITE COATING
3. PB-E, EXISTING, PROVIDE WHITE COATING
4. PB-G, EXISTING, PROVIDE WHITE COATING
5. PB-H, NEW
6. MAIN BREAKER SWITCHBOARD, "14-SB1-MAIN"
7. TRANSFORMER TU-4, NEW

GENERAL NOTES:

1. INSTALL ALL DUCT BANKS PER EM001 TYP

REV	DATE	BY	DESCRIPTION
0	SEP - 2014	JB	ISSUED FOR BID

DESIGNED MAG
DRAWN JB
CHECKED CA
DATE SEPTEMBER, 2014
PROJECT ENGINEER

Gamboa Engineers
17433 SW 65 CT
SOUTHWEST RANCHES, FL 33331
TEL. (954)-533-1121

carollo
3440 HOLLYWOOD BOULEVARD, SUITE 465
HOLLYWOOD, FLORIDA 33021
TEL: (954) 837-0030 - FAX: (954) 837-0035

pompano beach
Florida's Warmest Welcome

CITY OF POMPANO BEACH
WTP ELECTRICAL PHASE II IMPROVEMENTS
HIGH SERVICE PUMP 1-4 BUILDING
ELECTRICAL
DUCT BANK SECTIONS AND PARTIAL SITE PLAN

VERIFY SCALES
BAR IS ONE INCH ON ORIGINAL DRAWING
0 1"
IF NOT ONE INCH ON THIS SHEET, ADJUST SCALES ACCORDINGLY

JOB NO. 8683D.10 (II)
DRAWING NO. E-SP-03
SHEET NO. 19 OF 53

LAST SAVED BY: ccabrera
PROJECT NO. 8683D10 FILE NAME: 8683D10-E-SP-06.dgn

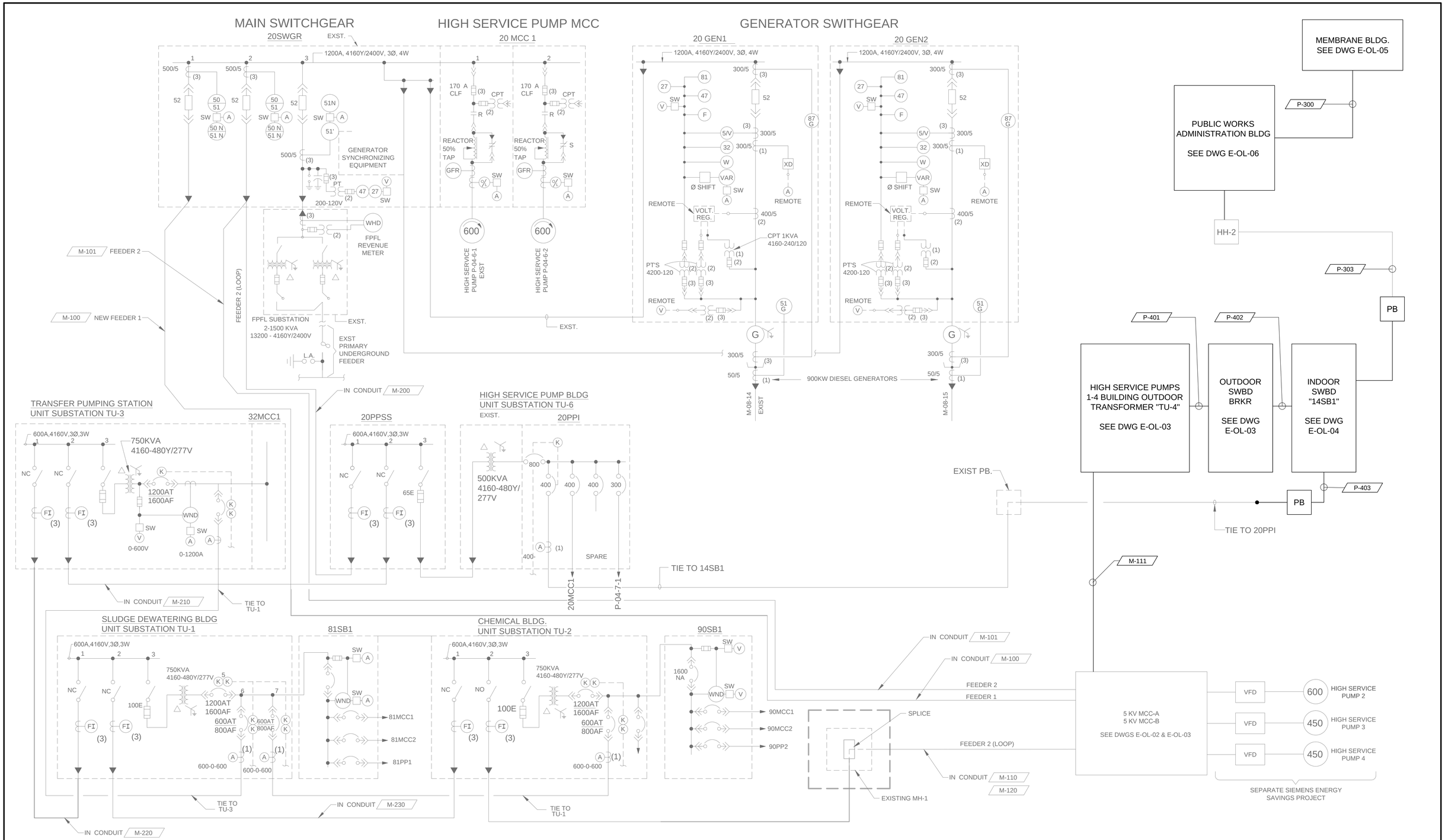

REV	DATE	BY	DESCRIPTION
0	SEP - 2014	JB	ISSUED FOR BID

LAST SAVED BY:

DESIGNED MAG
DRAWN JB
CHECKED MAG
DATE SEPTEMBER, 2014
PROJECT ENGINEER

Gamboa Engineers
17433 SW 65 CT
SOUTHWEST RANCHES, FL 33331
TEL. (954)-533-1121

carollo
3440 HOLLYWOOD BOULEVARD, SUITE 465
HOLLYWOOD, FLORIDA 33021
TEL: (954) 837-0030 - FAX: (954) 837-0035

pompano beach
Florida's Warmest Welcome

CITY OF POMPANO BEACH
WTP ELECTRICAL PHASE II IMPROVEMENTS
HIGH SERVICE PUMP 1-4 BUILDING
ELECTRICAL

WTP - EXISTING 5 KV ONE LINE DIAGRAM MODIFICATIONS

VERIFY SCALES
BAR IS ONE INCH ON ORIGINAL DRAWING
0 1"
IF NOT ONE INCH ON THIS SHEET, ADJUST SCALES ACCORDINGLY

JOB NO. 8683D.10 (II)
DRAWING NO. E-OL-01
SHEET NO. 20 OF 53

PROJECT NO. 8683D10 FILE NAME: 8683D10-E-OL-01.dgn

GENERAL NOTES:

1. 5 KV MCC AND BUSWAY EQUIPMENT EXISTING TO REMAIN

KEY NOTES:

1. REMOVE CABLES FROM EXISTING INDOOR TRANSFORMER AND CONNECT NEW CABLES TO NEW OUTDOOR TRANSFORMER "TU-4".
2. ADJUST PROTECTIVE RELAY SETTINGS ACCORDING TO DEVICE COORDINATION STUDY.

5KV MCC-A - FRONT ELEVATION (EXIST.)

SCALE: 3/4"=1'-0"
FILE: 8683D10-01-089-601

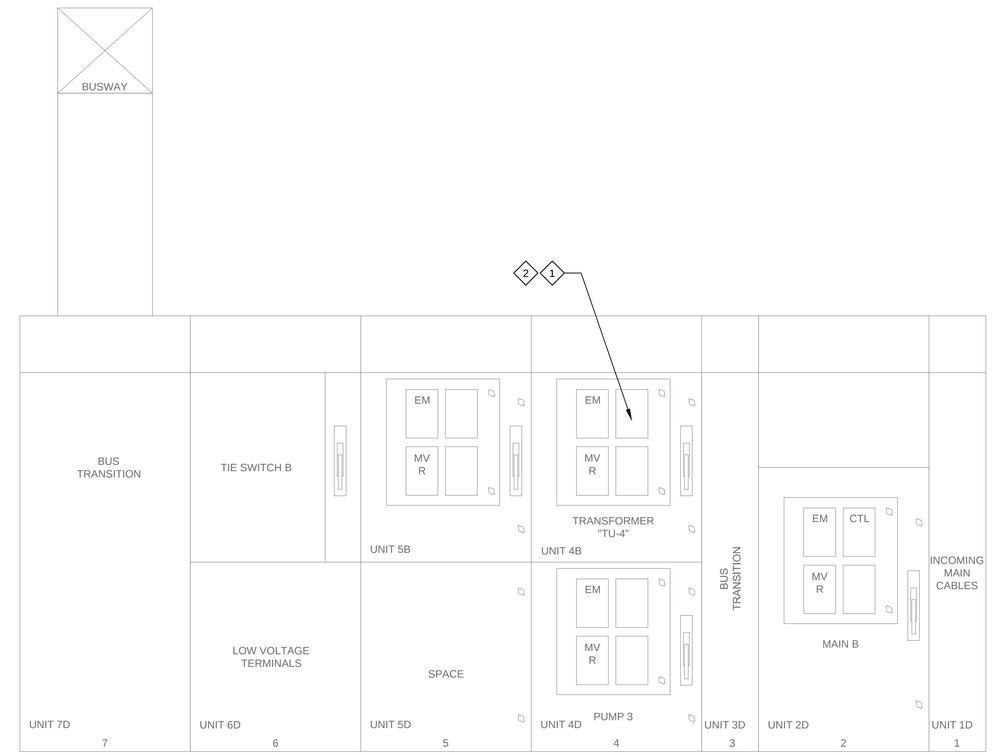

5KV MCC-B - FRONT ELEVATION (EXIST.)

SCALE: 3/4"=1'-0"
FILE: 8683D10-01-089-601

LAST SAVED BY: ccabrera

REV	DATE	BY	DESCRIPTION
0	SEP - 2014	JB	ISSUED FOR BID

DESIGNED MAG
DRAWN JB
CHECKED CA
DATE SEPTEMBER, 2014
PROJECT ENGINEER

Gamboa Engineers
17433 SW 65 CT
SOUTHWEST RANCHES, FL 33331
TEL. (954)-533-1121

carollo®
3440 HOLLYWOOD BOULEVARD, SUITE 465
HOLLYWOOD, FLORIDA 33021
TEL: (954) 837-0030 - FAX: (954) 837-0035

pompano beach
Florida's Warmest Welcome

CITY OF POMPANO BEACH
WTP ELECTRICAL PHASE II IMPROVEMENTS
HIGH SERVICE PUMP 1-4 BUILDING
ELECTRICAL
5 KV MOTOR CONTROL CENTER
A AND B - ELEVATION

VERIFY SCALES
BAR IS ONE INCH ON ORIGINAL DRAWING
0 1"
IF NOT ONE INCH ON THIS SHEET, ADJUST SCALES ACCORDINGLY

JOB NO. 8683D.10 (II)
DRAWING NO. E-OL-02
SHEET NO. 21 OF 53

PROJECT NO. 8683D10 FILE NAME: 8683D10-E-OL-02.dgn

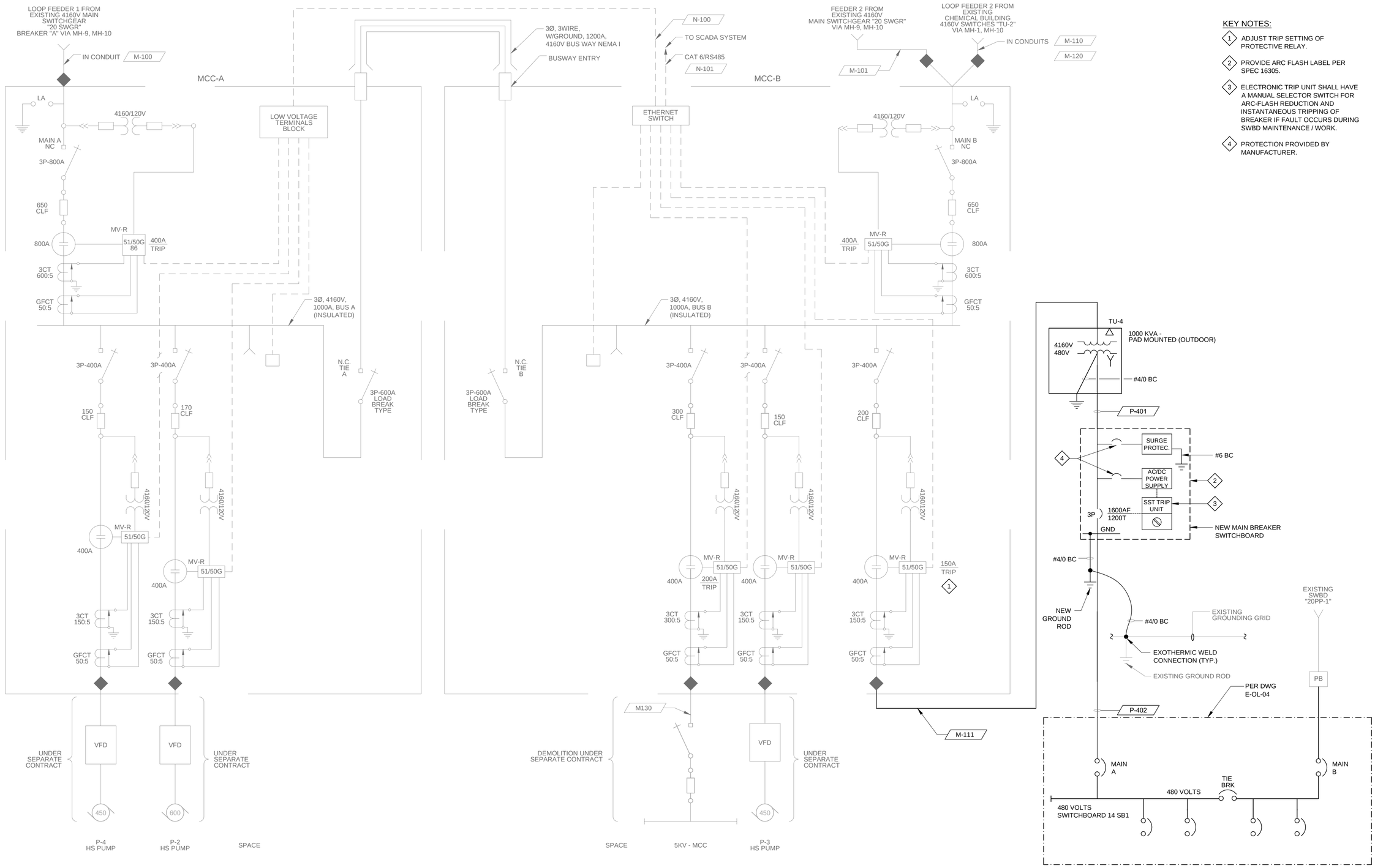

KEY NOTES:

1. ADJUST TRIP SETTING OF PROTECTIVE RELAY.
2. PROVIDE ARC FLASH LABEL PER SPEC 16305.
3. ELECTRONIC TRIP UNIT SHALL HAVE A MANUAL SELECTOR SWITCH FOR ARC-FLASH REDUCTION AND INSTANTANEOUS TRIPPING OF BREAKER IF FAULT OCCURS DURING SWBD MAINTENANCE / WORK.
4. PROTECTION PROVIDED BY MANUFACTURER.

REV	DATE	BY	DESCRIPTION
0	SEP - 2014	JB	ISSUED FOR BID

DESIGNED MAG
DRAWN JB
CHECKED CA
DATE SEPTEMBER, 2014
PROJECT ENGINEER

Gamboa Engineers
17433 SW 65 CT
SOUTHWEST RANCHES, FL 33331
TEL. (954)-533-1121

carollo
3440 HOLLYWOOD BOULEVARD, SUITE 465
HOLLYWOOD, FLORIDA 33021
TEL: (954) 837-0030 - FAX: (954) 837-0035

pompano beach
Florida's Warmest Welcome

CITY OF POMPANO BEACH
WTP ELECTRICAL PHASE II IMPROVEMENTS
HIGH SERVICE PUMP 1-4 BUILDING
ELECTRICAL

5 KV MOTOR CONTROL CENTER 14 PPS A & B ONE LINE DIAGRAM

VERIFY SCALES
BAR IS ONE INCH ON ORIGINAL DRAWING
0 1"
IF NOT ONE INCH ON THIS SHEET, ADJUST SCALES ACCORDINGLY

JOB NO. 8683D.10 (II)
DRAWING NO. E-OL-03
SHEET NO. 22 OF 53

LAST SAVED BY: ccabrera
PROJECT NO. 8683D10
FILE NAME: 8683D10-E-OL-03.dgn

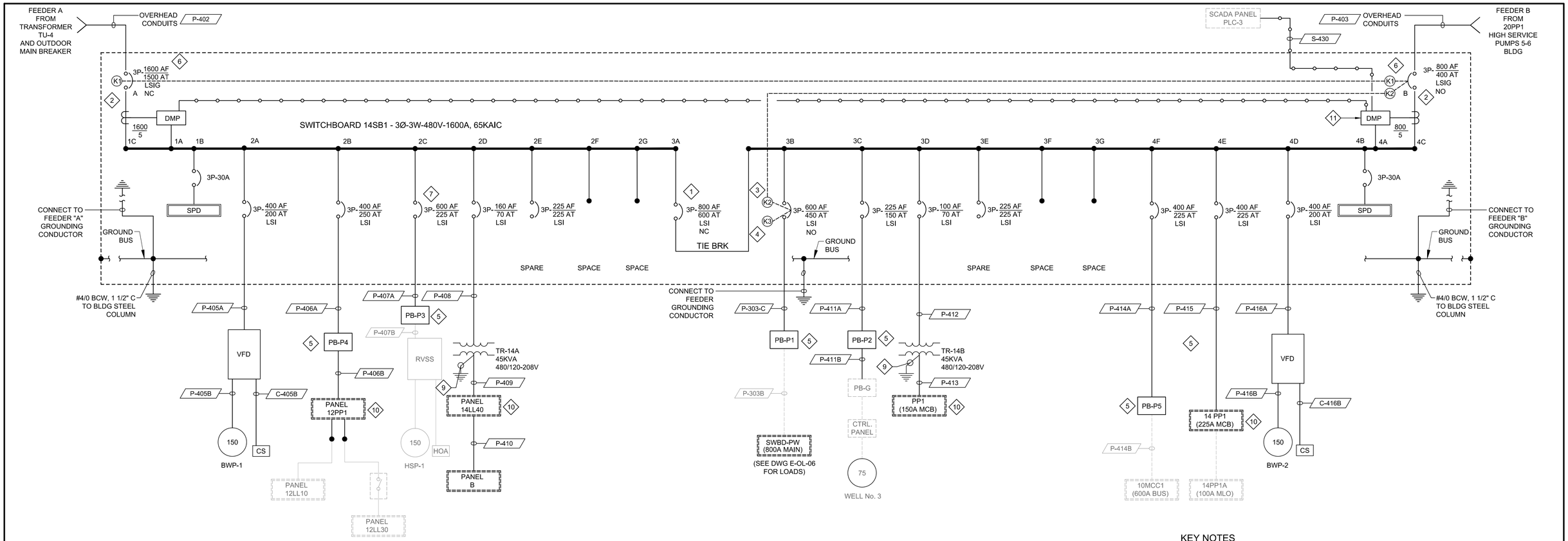

A SWITCHBOARD "14 SB1" ONE LINE DIAGRAM

SCALE: NTS
FILE: 7006D10-01-080-600

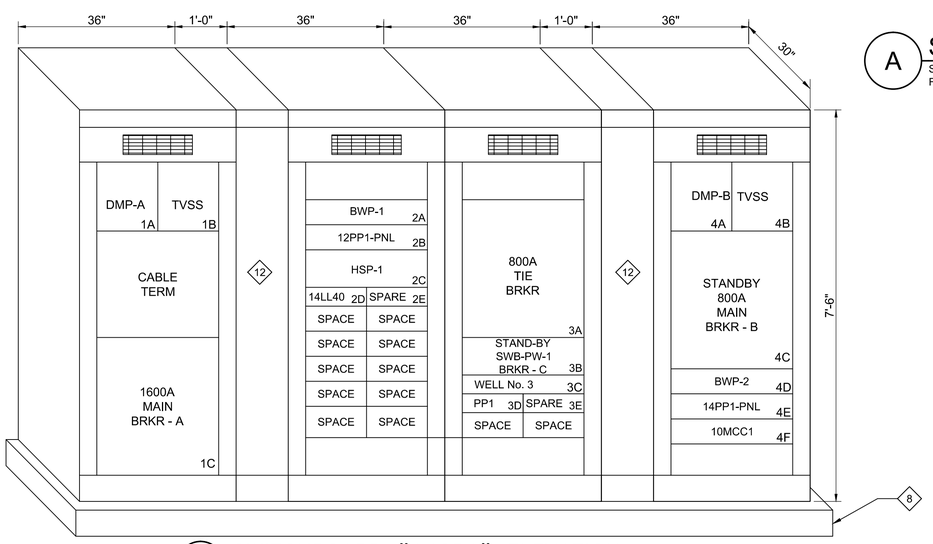

B SWITCHBOARD "14SB1" ELEVATION

SCALE: NTS
FILE: -

KEY NOTES

1. MAINTENANCE TIE BREAKER.
2. PROVIDE KIRK-KEY INTERLOCK (K1) TO ALLOW ONLY ONE (1) BREAKER CLOSED AT ANY ONE TIME.
3. PROVIDE KIRK-KEY INTERLOCK (K2) WITH PUBLIC WORKS SWITCHBOARD TO ALLOW ONLY ONE (1) BREAKER CLOSED AT ANY ONE TIME.
4. PROVIDE SUPERVISORY KIRK-KEY INTERLOCK KEY (K3) TO ALLOW EXPORT POWER TO PUBLIC WORKS SWITCHBOARD "PW1". SEE DWG E-OL-06.
5. PROVIDE NEW PULL BOX TO TEMPORARILY FEED EXISTING EQUIPMENT UNTIL NEW SWBD "14SB1" IS INSTALLED AND ENERGIZED.
6. MAIN BREAKERS TO HAVE MAINTENANCE SELECTOR SWITCH FOR REDUCED ENERGY LET THRU.
7. CIRCUIT BREAKER CAPACITY FOR FUTURE 300 HP PUMP/VFD.
8. NEW CONCRETE PAD.
9. CONNECT TO FEEDER GROUNDING CONDUCTOR AND #6 BCW, # ¾"C TO BLDG. STEEL COLUMN.
10. INTERCEPT EXISTING BRANCH WIRING AND CONDUITS AND EXTEND TO NEW PANELBOARD. EXISTING BRANCH WIRING LOADS SHALL BE RELOCATED TO NEW PANELBOARD ONE CIRCUIT AT A TIME, FOR MINIMUM POWER INTERRUPTION TO PROCESS LOADS.
11. PROVIDE ELECTRONIC METER WITH ETHERNET PORT FOR COMMUNICATION TO SCADA PLC-3.
12. PROVIDE A BUS TRANSITION SECTION FOR ADDITIONAL ISOLATION OF MAIN CIRCUIT BREAKER AND DISTRIBUTION SECTION

REV	DATE	BY	DESCRIPTION
0	SEP - 2014	JB	ISSUED FOR BID

DESIGNED MAG
DRAWN JB
CHECKED CA
DATE SEPTEMBER, 2014
PROJECT ENGINEER

Gamboa Engineers
17433 SW 65 CT
SOUTHWEST RANCHES, FL 33331
TEL. (954)-533-1121

carollo
3440 HOLLYWOOD BOULEVARD, SUITE 465
HOLLYWOOD, FLORIDA 33021
TEL: (954) 837-0030 - FAX: (954) 837-0035

pompano beach
Florida's Warmest Welcome

CITY OF POMPANO BEACH
WTP ELECTRICAL PHASE II IMPROVEMENTS
HIGH SERVICE PUMP 1-4 BUILDING
ELECTRICAL
SWITCHBOARD "14 SB1" ONE LINE DIAGRAM

VERIFY SCALES
BAR IS ONE INCH ON ORIGINAL DRAWING
0 1"
IF NOT ONE INCH ON THIS SHEET, ADJUST SCALES ACCORDINGLY

JOB NO. 8683D.10 (II)
DRAWING NO. E-OL-04
SHEET NO. 23 OF 53

LAST SAVED BY: jnewberry
PROJECT NO. 8683D10 FILE NAME: 8683D10-E-GE-04.dgn

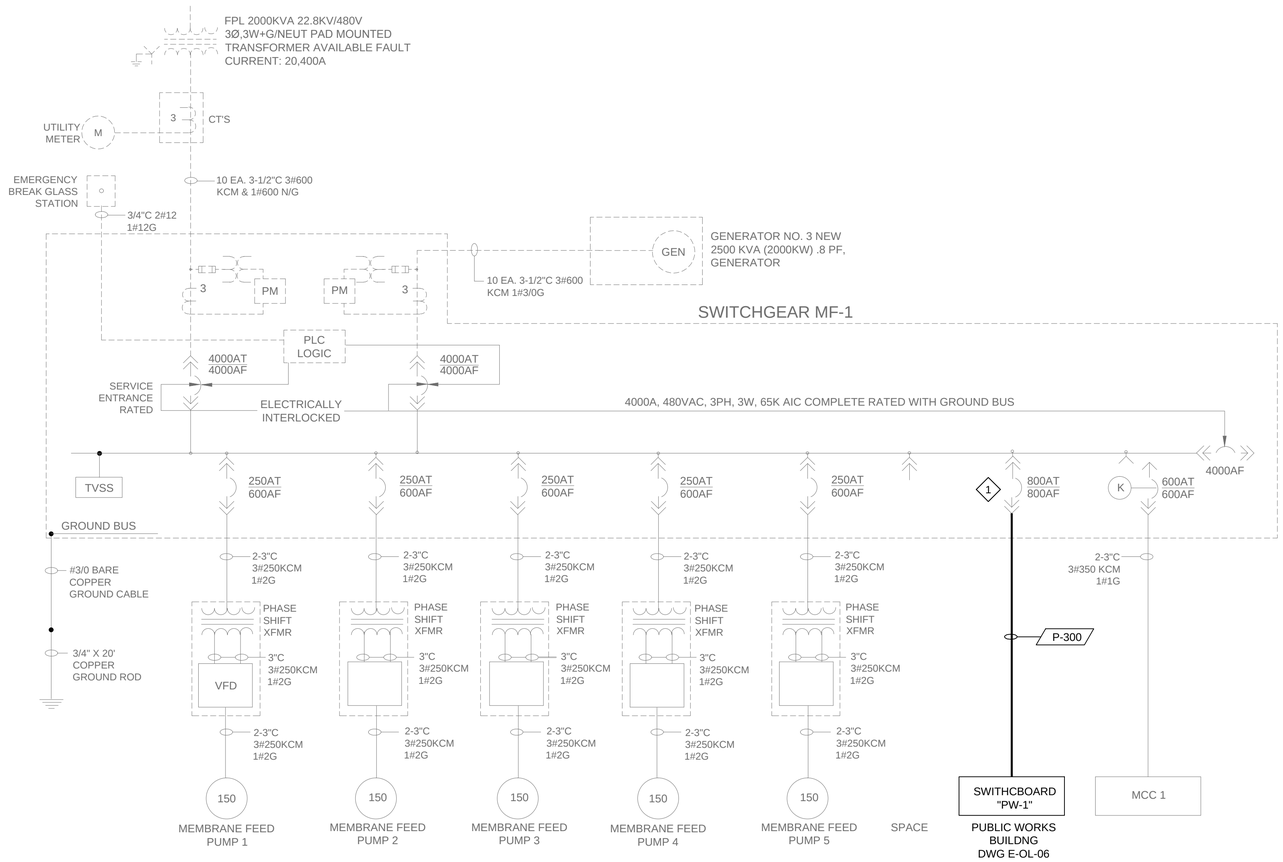

A SWITCHGEAR "MF-1" ONE LINE DIAGRAM - ADDITIONS

SCALE: NTS
FILE:

B SWITCHGEAR "MF-1" ELEVATION (PHOTO)

SCALE: NTS
FILE:

KEY NOTES

1. USE SPARE BREAKER AND ADJUST TRIP SETTING ACCORDING TO COORDINATION STUDY PER SPEC. 16305.

REV	DATE	BY	DESCRIPTION
0	SEP - 2014	JB	ISSUED FOR BID

DESIGNED MAG
DRAWN JB
CHECKED CA
DATE SEPTEMBER, 2014
PROJECT ENGINEER

Gamboa Engineers
17433 SW 65 CT
SOUTHWEST RANCHES, FL 33331
TEL. (954)-533-1121

carollo
3440 HOLLYWOOD BOULEVARD, SUITE 465
HOLLYWOOD, FLORIDA 33021
TEL: (954) 837-0030 - FAX: (954) 837-0035

pompano beach
Florida's Warmest Welcome

CITY OF POMPANO BEACH
WTP ELECTRICAL PHASE II IMPROVEMENTS
HIGH SERVICE PUMP 1-4 BUILDING
ELECTRICAL
SWITCHBOARD "MF-1" ONE LINE DIAGRAM AND ELEVATION - ADDITIONS

VERIFY SCALES
BAR IS ONE INCH ON ORIGINAL DRAWING
0 1"
IF NOT ONE INCH ON THIS SHEET, ADJUST SCALES ACCORDINGLY

JOB NO. 8683D.10 (II)
DRAWING NO. E-OL-05
SHEET NO. 24 OF 53

LAST SAVED BY: jnewberry
PROJECT NO. 8683D10
FILE NAME: 8683D10-E-GE-04.dgn

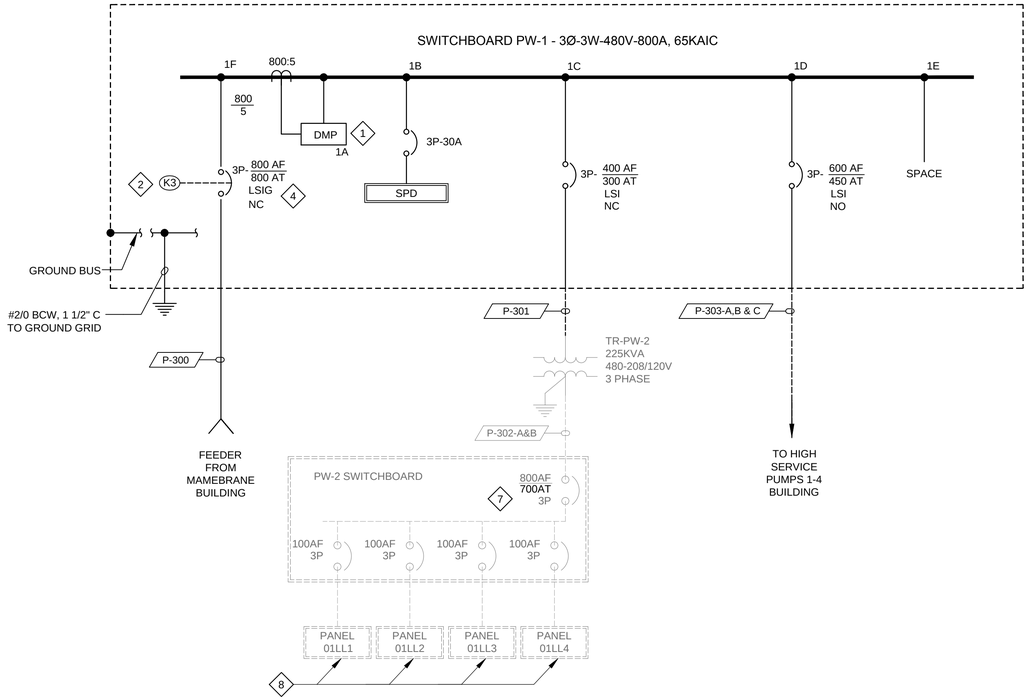

A - PUBLIC WORKS ONE LINE DIAGRAM - ADDITIONS

SCALE: N.T.S.
FILE: -

B - SWITCHBOARD"PW-1" PROPOSED LOCATION

SCALE: N.T.S.
FILE: -

KEY NOTES

1. PROVIDE DIGITAL ELECTRONIC METER.
2. PROVIDE SUPERVISORY FOR KIRK-KEY INTERLOCK (K3) WITH SWITCHBOARD "14SB1", TO ALLOW INPUT POWER FROM HSP 1-4 BLDG.
3. NEW CONCRETE PAD EXTENSION.
4. MAIN BREAKERS TO HAVE ARC FLASH MAINTENANCE SELECTOR SWITCH FEATURE.
5. TEMPORARY RELOCATE EXISTING AC UNIT TO ALLOW TRENCHING FOR NEW CONDUIT. UPON COMPLETION OF WORK MOVE BACK EXISTING AC UNIT TO IT'S ORIGINAL LOCATION AND RESTORE ADJACENT AREA TO MATCH EXISTING FINISH CONDITIONS.
6. BACK FILL EXISTING OPENING WITH 8" CMU, PLUS STUCCO AT EXTERIOR AND GYPSUM AT INTERIOR. PAINT TO MATCH ADJACENT FINISH.
7. ADJUST CIRCUIT BREAKER TRIP SETTING FOR 700 AMPERES.
8. PROVIDE ARC FLASH SAFETY LABEL PER REQUIREMENTS IN SPEC. SECTION 16305.

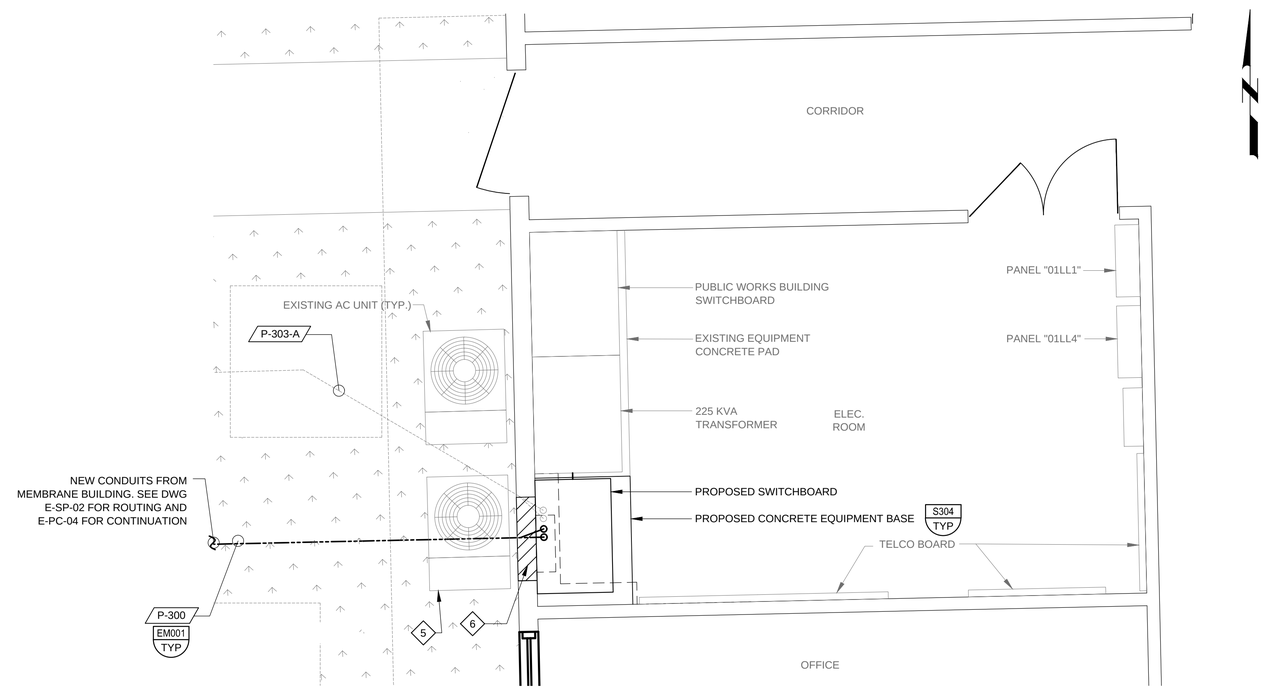

C - PUBLIC WORKS BUILDING - ELECTRICAL ROOM PLAN

E-SP-02
SCALE: 1/2"=1'-0"
FILE: -

REV	DATE	BY	DESCRIPTION
0	SEP - 2014	JB	ISSUED FOR BID

DESIGNED MAG
DRAWN JB
CHECKED CA
DATE SEPTEMBER, 2014
PROJECT ENGINEER

Gamboa Engineers
17433 SW 65 CT
SOUTHWEST RANCHES, FL 33331
TEL. (954)-533-1121

carollo
3440 HOLLYWOOD BOULEVARD, SUITE 465
HOLLYWOOD, FLORIDA 33021
TEL: (954) 837-0030 - FAX: (954) 837-0035

pompano beach
Florida's Warmest Welcome

CITY OF POMPANO BEACH
WTP ELECTRICAL PHASE II IMPROVEMENTS
HIGH SERVICE PUMP 1-4 BUILDING
ELECTRICAL
PUBLIC WORKS BUILDING ONE LINE DIAGRAM AND ELEVATIONS - ADDITIONS

VERIFY SCALES
BAR IS ONE INCH ON ORIGINAL DRAWING
0 1"
IF NOT ONE INCH ON THIS SHEET, ADJUST SCALES ACCORDINGLY

JOB NO. 8683D.10 (II)
DRAWING NO. E-OL-06
SHEET NO. 25 OF 53

LAST SAVED BY: jnewberry
PROJECT NO. 8683D10
FILE NAME: 8683D10-E-GE-04.dgn

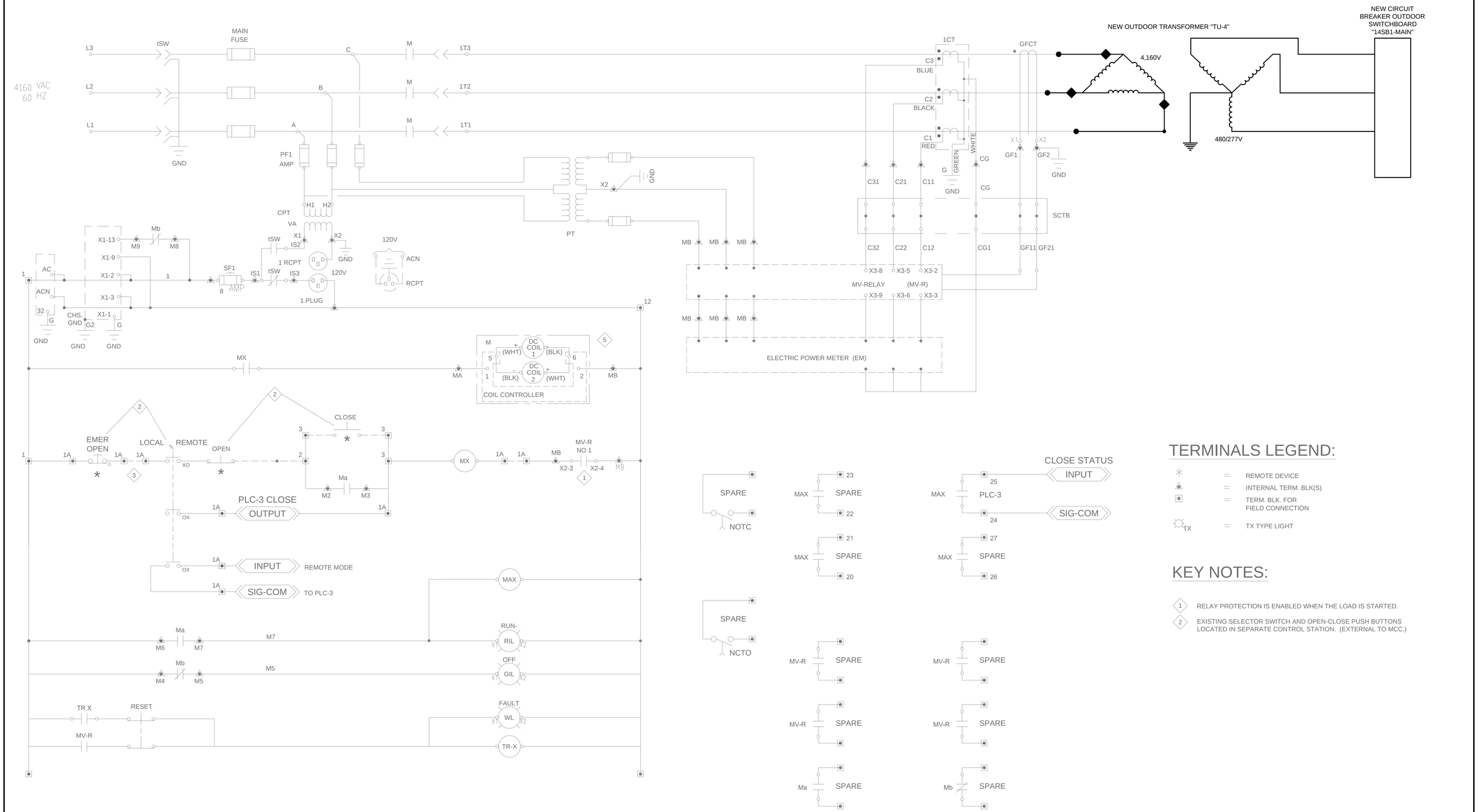

LAST SAVED BY: ccabrera

REV	DATE	BY	DESCRIPTION
0	SEP - 2014	JB	ISSUED FOR BID

DESIGNED MAG
DRAWN JB
CHECKED CA
DATE SEPTEMBER, 2014
PROJECT ENGINEER

Gamboa Engineers
17433 SW 65 CT
SOUTHWEST RANCHES, FL 33331
TEL. (954)-533-1121

carollo
3440 HOLLYWOOD BOULEVARD, SUITE 465
HOLLYWOOD, FLORIDA 33021
TEL: (954) 837-0030 - FAX: (954) 837-0035

pompano beach
Florida's Warmest Welcome

CITY OF POMPANO BEACH
WTP ELECTRICAL PHASE II IMPROVEMENTS
HIGH SERVICE PUMP 1-4 BUILDING
ELECTRICAL

FEEDER CONTROL SCHEMATIC FOR TRANSFORMER

VERIFY SCALES
BAR IS ONE INCH ON ORIGINAL DRAWING
0 1"
IF NOT ONE INCH ON THIS SHEET, ADJUST SCALES ACCORDINGLY

JOB NO. 8683D.10 (II)
DRAWING NO. E-CS-01
SHEET NO. 26 OF 53

PROJECT NO. 8683D10 FILE NAME: 8683D10-E-CS-02.dgn

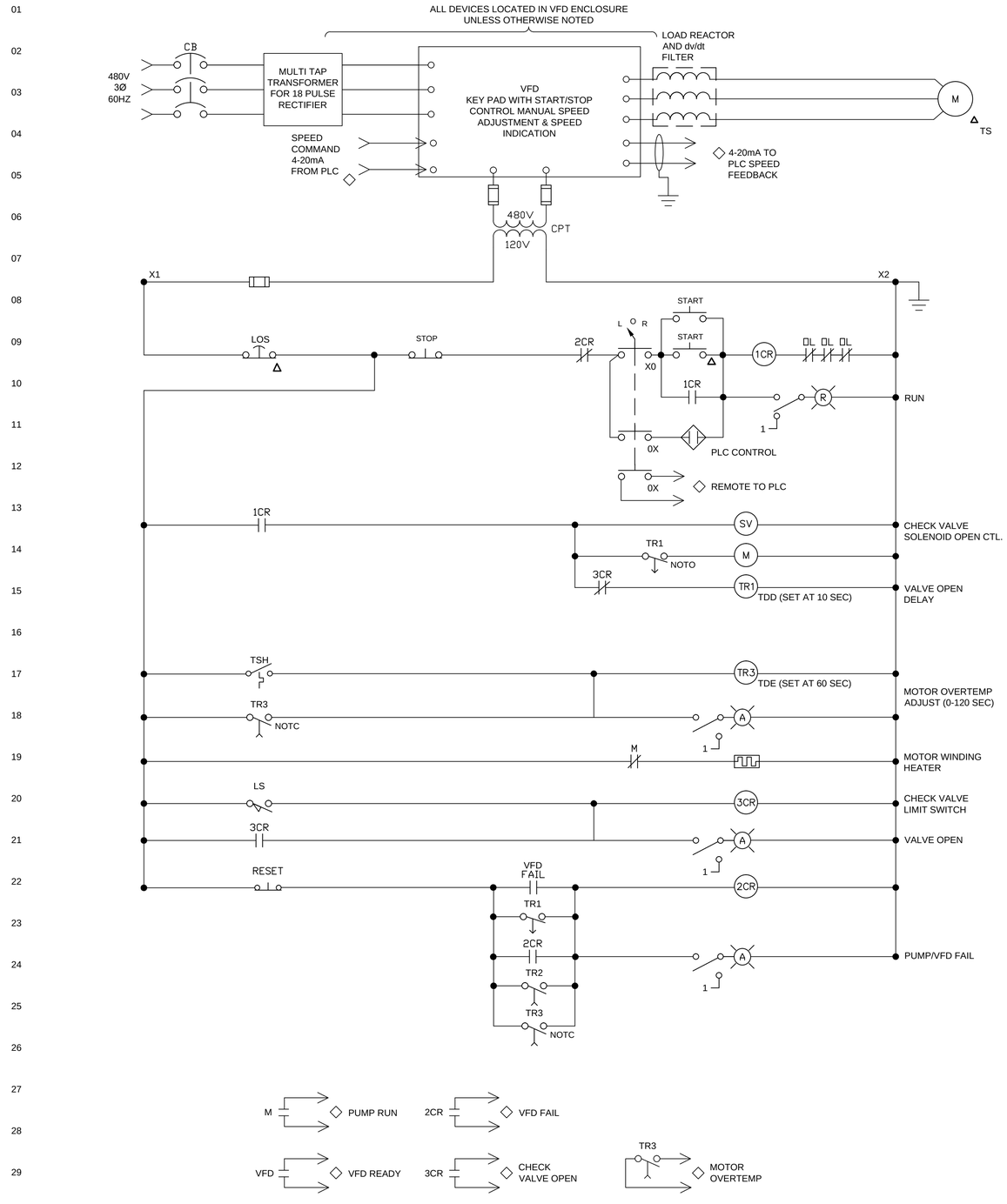

LEGEND:

ALL DEVICES LOCATED IN THE FIELD, UNLESS OTHERWISE NOTED

△ ITEMS LOCATED IN THE FIELD

◇ ITEMS LOCATED IN THE PLC AND I/O CONTROL PANEL

REV	DATE	BY	DESCRIPTION
0	SEP - 2014	JB	ISSUED FOR BID

DESIGNED MAG
DRAWN JB
CHECKED CA
DATE SEPTEMBER, 2014
PROJECT ENGINEER

Gamboa Engineers
17433 SW 65 CT
SOUTHWEST RANCHES, FL 33331
TEL. (954)-533-1121

carollo
3440 HOLLYWOOD BOULEVARD, SUITE 465
HOLLYWOOD, FLORIDA 33021
TEL: (954) 837-0030 - FAX: (954) 837-0035

pompano beach
Florida's Warmest Welcome

CITY OF POMPANO BEACH
WTP ELECTRICAL PHASE II IMPROVEMENTS
HIGH SERVICE PUMP 1-4 BUILDING
ELECTRICAL
CONTROL SCHEMATIC
FOR BACK WASH PUMPS No. 1 & No. 2

VERIFY SCALES
BAR IS ONE INCH ON ORIGINAL DRAWING
0 1"
IF NOT ONE INCH ON THIS SHEET, ADJUST SCALES ACCORDINGLY

JOB NO. 8683D.10 (II)
DRAWING NO. E-CS-02
SHEET NO. 27 OF 53

LAST SAVED BY: ccabrera
PROJECT NO. 8683D10
FILE NAME: 8683D10-E-CS-02.dgn

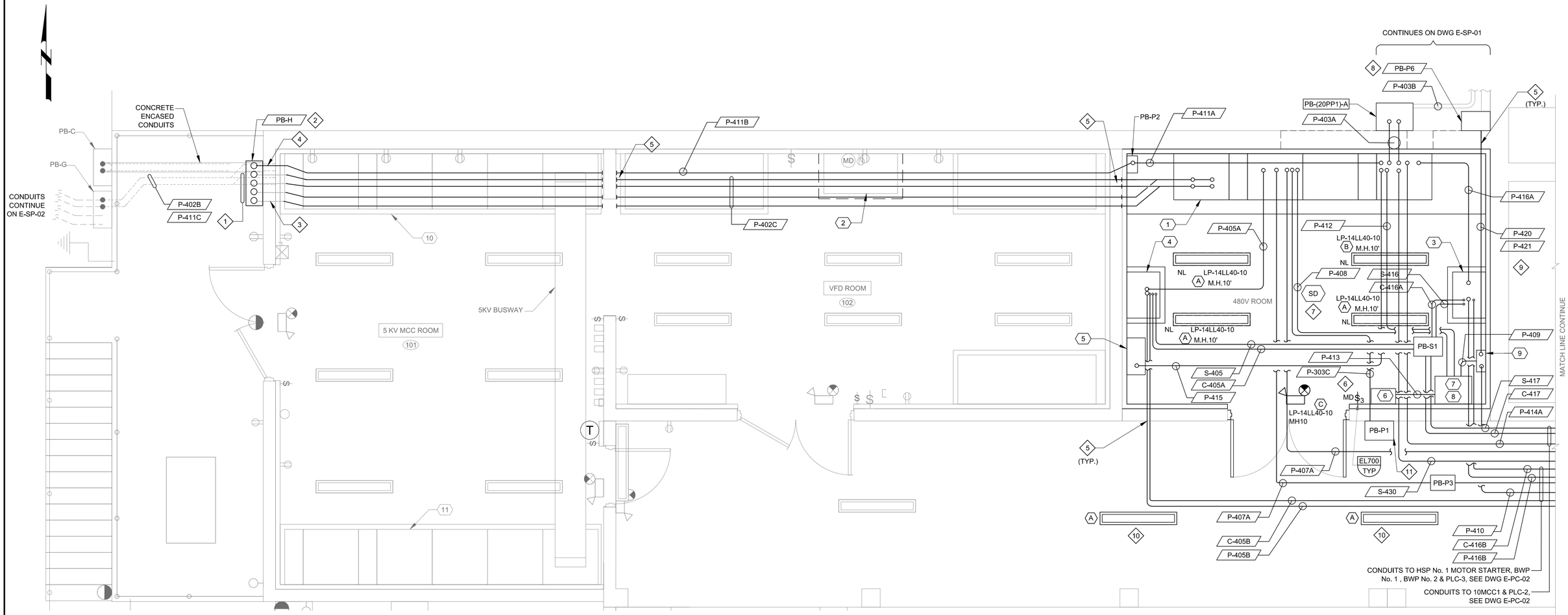

HIGH SERVICE PUMP 1-4 BUILDING - 2ND FLOOR

SCALE: 3/8" = 1'
FILE: 8638D10-01-080-102

EQUIPMENT TAGS:

1. 480V SWITCHBOARD 14SB1. PROVIDE ARC FLASH LABEL PER SPEC 16305
2. FUTURE VFD (HSP No. 1)
3. 150HP VFD (BWP No. 1). PROVIDE ARC FLASH LABEL PER SPEC 16305
4. 150HP VFD (BWP No. 2. PROVIDE ARC FLASH LABEL PER SPEC 16305
5. PANEL 14-PP1. PROVIDE ARC FLASH LABEL PER SPEC 16305
6. PANEL PP1. PROVIDE ARC FLASH LABEL PER SPEC 16305
7. 45KVA TRANSFORMER "TR-14A" (LOCATED BELOW "TR-14B). PROVIDE ARC FLASH LABEL PER SPEC 16305 (S901 TYP)
8. 45KVA TRANSFORMER "TR-14B" (LOCATED ABOVE "TR-14A). PROVIDE ARC FLASH LABEL PER SPEC 16305 (S901 TYP)
9. PANEL 14-LL40. PROVIDE ARC FLASH LABEL PER SPEC 16305
10. 5KV MCC-A
11. 5KV MCC-B

KEY NOTES:

1. INTERCEPT EXISTING CONDUITS STUB-UP AND EXTEND UP TO NEW PULL BOX
2. PROVIDE NEW PULL BOX
3. INTERCEPT 4 - 4" NIPPLES ACROSS THE WALL AND COUPLE TO NEW CONDUITS AND PULL BOX
4. PROVIDE WALL CORE DRILLING FOR 1 - 2" CONDUIT.
5. CORE DRILL WALL FOR NEW CONDUITS
6. e S LP-14LL40-2 3MD (EL700 TYP)
7. PROVIDE 120V SMOKE DETECTOR AND INTERCONNECT WITH EXISTING SMOKE DETECTORS IN VFD ROOM.
8. INTERCEPT EXISTING CONDUITS FROM PANEL 14-LL40 AND EXTEND UP ON EXTERIOR WALL TO NEW PULL BOX
9. EXISTING CONDUITS TO BE RELOCATED 9'-0" ABOVE FINISH FLOOR TO INTERCEPT NEW PULL BOX "PB-P6". NEW VERTICAL CONDUIT TO PANEL 14-LL40.
10. CONNECT NEW LUMINAIRE TO EXISTING LIGHTING CIRCUITS IN MEZZANINE.
11. INTERCEPT CONDUITS FROM PUBLIC WORKS BUILDING. VERIFY LOCATION OF EXISTING CONDUITS. LOCATE NEW PULL BOX TO SUIT FIELD CONDITIONS.

GENERAL NOTES:

1. LIGHTING AND RECEPTACLE CONDUIT ROUTING IS NOT SHOWN ON THIS SHEET. THE CONTRACTOR SHALL USE THE OTHER POWER AND CONTROL CONDUIT ROUTING AS A GUIDE AND INSTALL THE CONDUITS AND WIRE IN A SIMILAR MANNER.
2. LIGHTING CIRCUITS SHALL HAVE SAME MATERIALS FOR CONDUITS AND FITTINGS AS IDENTIFIED FOR OTHER POWER AND CONTROL WITHIN THE SAME AREA.
3. 3-WIRE AND 4-WIRE CIRCUITS SHALL NOT BE ALLOWED FOR LIGHTING CIRCUITS. EACH CIRCUIT SHALL HAVE A DEDICATED NEUTRAL TO THE PANELBOARD.
4. MOUNT LIGHTS BENEATH HVAC DUCTS PER (EL901 TYP)
5. OUTSIDE WALL CONDUIT PENETRATIONS PER DETAIL (EM134 TYP)
6. PROVIDE ARC FLASH LABEL PER SPEC 16305.
7. ALL NEW CONDUITS SHALL BE PAINTED PER SPECIFICATIONS SECTION 09910.

REV	DATE	BY	DESCRIPTION
0	SEP - 2014	JB	ISSUED FOR BID

DESIGNED MAG
DRAWN JB
CHECKED CA
DATE SEPTEMBER, 2014
PROJECT ENGINEER

Gamboa Engineers
17433 SW 65 CT
SOUTHWEST RANCHES, FL 33331
TEL. (954)-533-1121

carollo
3440 HOLLYWOOD BOULEVARD, SUITE 465
HOLLYWOOD, FLORIDA 33021
TEL: (954) 837-0030 - FAX: (954) 837-0035

pompano beach
Florida's Warmest Welcome

CITY OF POMPANO BEACH
WTP ELECTRICAL PHASE II IMPROVEMENTS
HIGH SERVICE PUMP 1-4 BUILDING
ELECTRICAL
HIGH SERVICE PUMP 1-4 BUILDING
POWER AND CONTROL AND LIGHTING PLAN

VERIFY SCALES
BAR IS ONE INCH ON ORIGINAL DRAWING
0 1"
IF NOT ONE INCH ON THIS SHEET, ADJUST SCALES ACCORDINGLY

JOB NO. 8683D.10 (II)
DRAWING NO. E-PC-01
SHEET NO. 28 OF 53

LAST SAVED BY: ccabrera
PROJECT NO. 8683D10 FILE NAME: 8683D10-E-LC-01.dgn

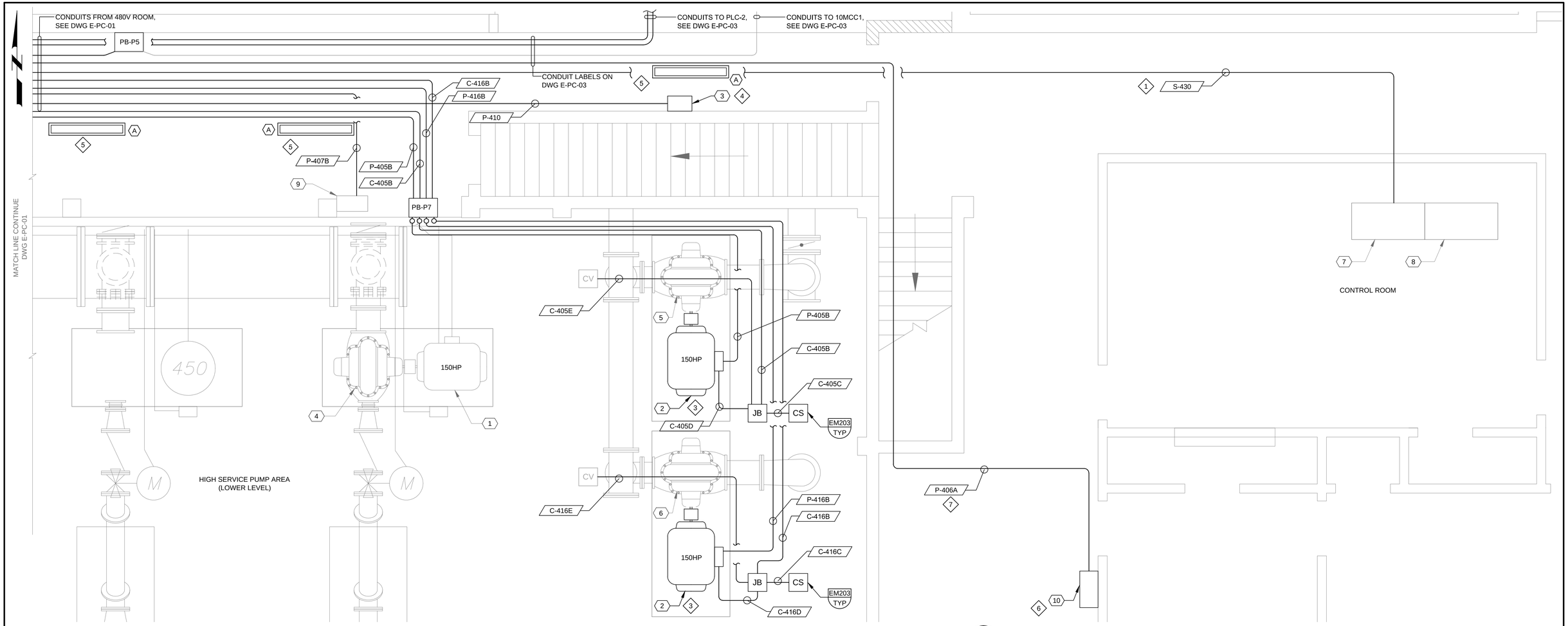

A HIGH SERVICE PUMP 1-4 BUILDING - 1ST/MEZZANINE FLOOR

SCALE: 3/8"=1'-0"
FILE: -

B BACK WASH PUMP No. 1

SCALE: N.T.S.
FILE: -

C BACK WASH PUMP No. 2

SCALE: N.T.S.
FILE: -

EQUIPMENT TAGS:

1. 150HP MOTOR
2. 150HP MOTOR
3. PIPE GALLERY ELECTRICAL PANEL "B" PROVIDE ARC FLASH LABEL PER SPEC 16305.
4. HSP No. 1
5. BWP No. 1
6. BWP NO. 2
7. PLC-3
8. WIRING TERMINAL CABINET IP-3
9. HSP No. 1 MOTOR STARTER. PROVIDE ARC FLASH LABEL PER SPEC 16305.
10. PANEL "12PP1" (LOCATED ON GROUND FLOOR) PROVIDE ARC FLASH LABEL PER SPEC 16305.

KEY NOTES:

1. PORTION OF WIRING MAY BE ROUTED VIA EXISTING CABLE TRAY
2. EXISTING CONDUITS
3. EXISTING MOTOR TO BE REPLACED. PROVIDE SUPPORT BASE PER NEW MOTOR DIMENSIONS.
4. REPLACE EXISTING PANEL "B"
5. CONNECT NEW LUMINAIRE TO EXISTING LIGHTING CIRCUITS IN MEZZANINE.
6. REPLACE EXISTING PANEL.
7. ROUTE NEW CONDUIT ALONG EXISTING CONDUITS. FIELD VERIFY EXISTING CONDUIT LOCATION

GENERAL NOTES:

1. LIGHTING AND RECEPTACLE CONDUIT ROUTING IS NOT SHOWN ON THIS SHEET. THE CONTRACTOR SHALL USE THE OTHER POWER AND CONTROL CONDUIT ROUTING AS A GUIDE AND INSTALL THE CONDUITS AND WIRE IN A SIMILAR MANNER.
2. USE SAME MATERIALS FOR CONDUITS AND FITTINGS AS IDENTIFIED FOR OTHER POWER AND CONTROL WITHIN THE SAME AREA.
3. RACEWAY SIZES PER REQUIREMENTS IN SPECIFICATIONS FOR CONDUIT FILL, 3/4" CONDUIT MINIMUM SIZE.
4. PROVIDE NEW ARC FLASH LABELS PER SPECIFICATION SECTION 16305.
5. ALL NEW CONDUITS SHALL BE PAINTED PER SPECIFICATIONS SECTION 09910.

REV	DATE	BY	DESCRIPTION
0	SEP - 2014	JB	ISSUED FOR BID

DESIGNED MAG
DRAWN JB
CHECKED CA
DATE SEPTEMBER, 2014
PROJECT ENGINEER

Gamboa Engineers
17433 SW 65 CT
SOUTHWEST RANCHES, FL 33331
TEL. (954)-533-1121

carollo
3440 HOLLYWOOD BOULEVARD, SUITE 465
HOLLYWOOD, FLORIDA 33021
TEL: (954) 837-0030 - FAX: (954) 837-0035

pompano beach
Florida's Warmest Welcome

CITY OF POMPANO BEACH
WTP ELECTRICAL PHASE II IMPROVEMENTS
HIGH SERVICE PUMP 1-4 BUILDING
ELECTRICAL
HIGH SERVICE PUMP 1-4 BUILDING
POWER AND CONTROL PLAN

VERIFY SCALES
BAR IS ONE INCH ON ORIGINAL DRAWING
0 1"
IF NOT ONE INCH ON THIS SHEET, ADJUST SCALES ACCORDINGLY

JOB NO. 8683D.10 (II)
DRAWING NO. E-PC-02
SHEET NO. 29 OF 53

LAST SAVED BY: ccabrera
PROJECT NO. 8683D10
FILE NAME: 8683D10-E-LC-01.dgn

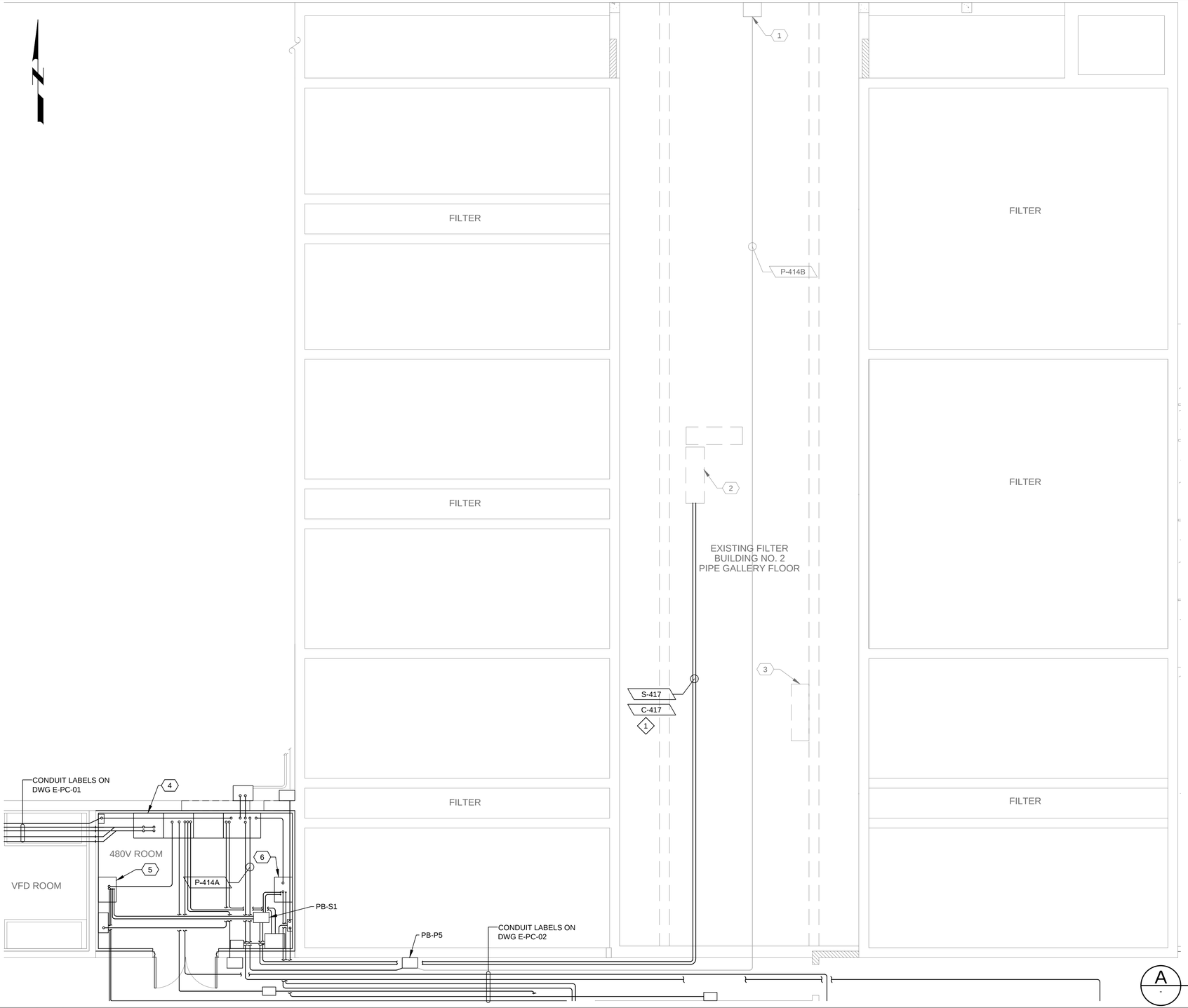

EQUIPMENT TAGS:

1. EXISTING 10MCC1 (ON FLOOR ABOVE) PROVIDE ARC FLASH LABEL PER SPEC 16305.
2. PLC-2 (ON FLOOR ABOVE)
3. EXISTING 14MCC1A (ON FLOOR ABOVE) PROVIDE ARC FLASH LABEL PER SPEC 16305.
4. 480V SWITCHBOARD 14SB1. PROVIDE ARC FLASH LABEL PER SPEC 16305.
5. 150HP VFD (BWP No. 1). PROVIDE ARC FLASH LABEL PER SPEC 16305.
6. 150HP VFD (BWP No. 2. PROVIDE ARC FLASH LABEL PER SPEC 16305.

KEY NOTES:

1. ROUTE NEW CONDUIT IN CEILING OF PIPING GALLERY.

GENERAL NOTES:

1. ALL NEW CONDUITS SHALL BE PAINTED PER SPEC. 09910.

A - FILTER BUILDING No. 2 - PIPE GALLERY FLOOR

SCALE: 3/16"=1'-0"
FILE: 8683D10-01-040-901, 8683D10-01-030-904

REV	DATE	BY	DESCRIPTION
0	SEP - 2014	JB	ISSUED FOR BID

DESIGNED MAG
DRAWN JB
CHECKED CA
DATE SEPTEMBER, 2014
PROJECT ENGINEER

Gamboa Engineers
17433 SW 65 CT
SOUTHWEST RANCHES, FL 33331
TEL. (954)-533-1121

carollo
3440 HOLLYWOOD BOULEVARD, SUITE 465
HOLLYWOOD, FLORIDA 33021
TEL: (954) 837-0030 - FAX: (954) 837-0035

pompano beach
Florida's Warmest Welcome

CITY OF POMPANO BEACH
WTP ELECTRICAL PHASE II IMPROVEMENTS
HIGH SERVICE PUMP 1-4 BUILDING
ELECTRICAL
FILTER BUILDING
POWER AND CONTROL PLAN

VERIFY SCALES
BAR IS ONE INCH ON ORIGINAL DRAWING
0 1"
IF NOT ONE INCH ON THIS SHEET, ADJUST SCALES ACCORDINGLY

JOB NO. 8683D.10 (II)
DRAWING NO. E-PC-03
SHEET NO. 30 OF 53

LAST SAVED BY: ccabrera
PROJECT NO. 8683D10 FILE NAME: 8683D10-E-LC-01.dgn

B SWITCHGEAR ROOM (PHOTO)
SCALE: NTS
FILE:

C VFD ROOM (PHOTO)
SCALE: NTS
FILE:

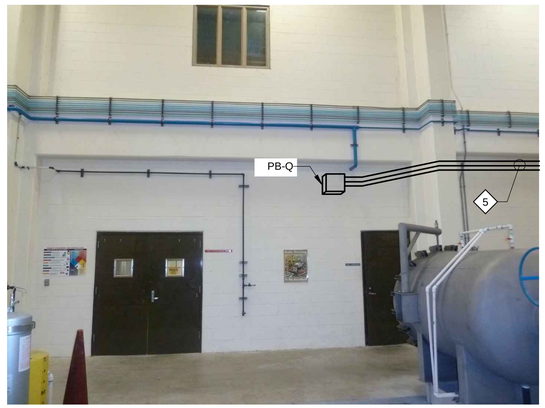

D MEMBRANE SKID AREA (PHOTO)
SCALE: NTS
FILE:

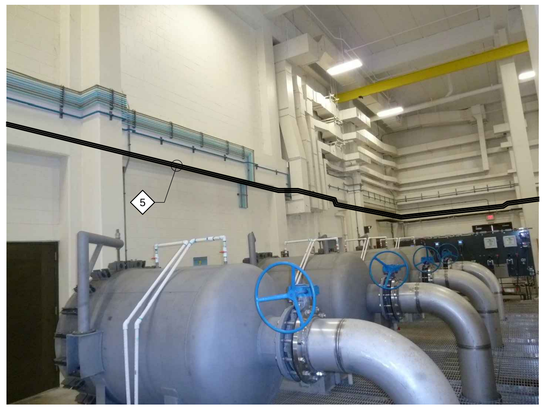

E MEMBRANE SKID AREA (PHOTO)
SCALE: NTS
FILE:

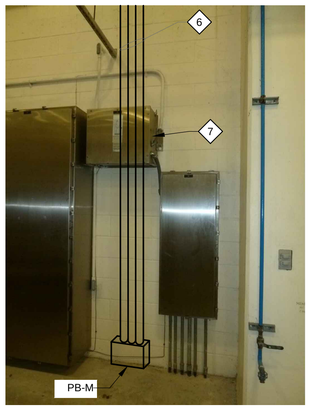

F MEMBRANE SKID AREA (PHOTO)
SCALE: NTS
FILE:

KEY NOTES:

1. USE SPARE BREAKER.
2. ROUTE CONDUIT FROM SWITCHGEAR ALONG CONCRETE BEAM. EM102 TYP
3. WALL PENETRATION. EM138 TYP
4. ROUTE CONDUIT HORIZONTALLY. EM101 TYP
5. ROUTE CONDUIT HORIZONTALLY. EM110 TYP
6. ROUTE CONDUIT VERTICALLY ON CMU WALL. EM101 TYP
7. RELOCATE EXISTING TRANSFORMER TO LEFT SIDE OF PANEL BOARD FOR NEW CONDUITS ON THE WALL.

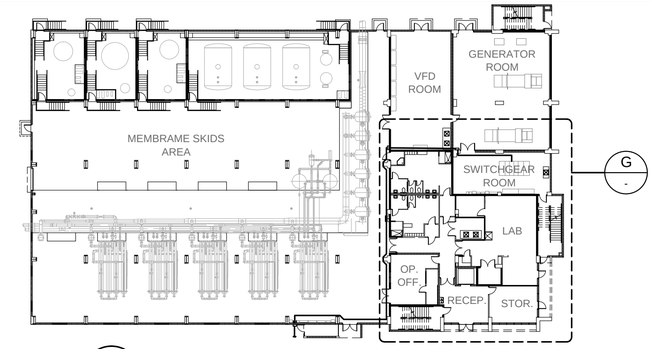

A MEMBRAME BUILDING KEY PLAN
SCALE: 1/32" = 1'-0"
FILE:

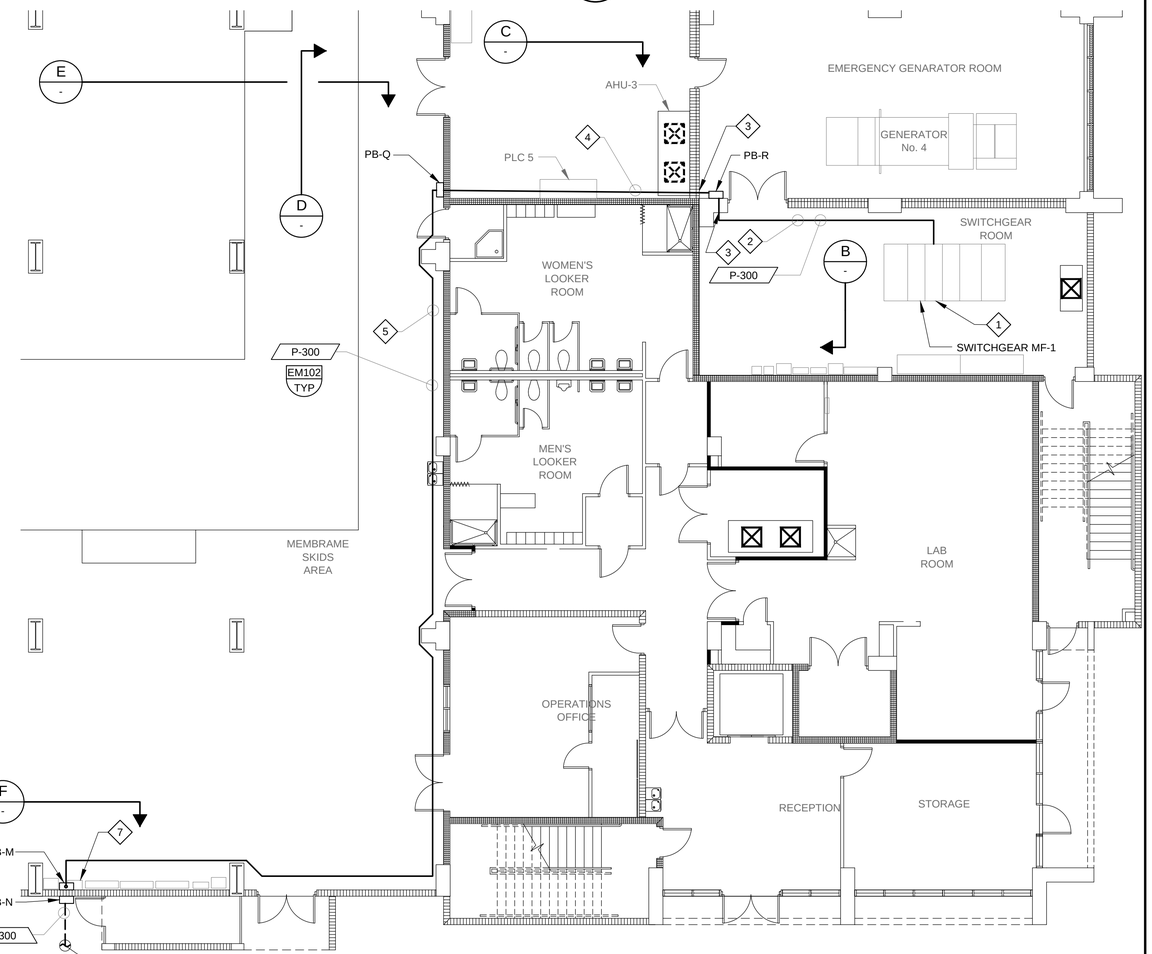

G MEMBRAME BUILDING PARTIAL GROUND FLOOR PLAN
SCALE: 1/8" = 1'-0"
FILE:

REV	DATE	BY	DESCRIPTION
0	SEP - 2014	JB	ISSUED FOR BID

DESIGNED MAG
DRAWN JB
CHECKED CA
DATE SEPTEMBER, 2014
PROJECT ENGINEER

Gamboa Engineers
17433 SW 65 CT
SOUTHWEST RANCHES, FL 33331
TEL. (954)-533-1121

carollo
3440 HOLLYWOOD BOULEVARD, SUITE 465
HOLLYWOOD, FLORIDA 33021
TEL: (954) 837-0030 - FAX: (954) 837-0035

pompano beach
Florida's Warmest Welcome

CITY OF POMPANO BEACH
WTP ELECTRICAL PHASE II IMPROVEMENTS
HIGH SERVICE PUMP 1-4 BUILDING
ELECTRICAL
MEMBRANE BUILDING - PARTIAL GROUND LEVEL POWER PLAN

VERIFY SCALES
BAR IS ONE INCH ON ORIGINAL DRAWING
0 1"
IF NOT ONE INCH ON THIS SHEET, ADJUST SCALES ACCORDINGLY

JOB NO. 8683D.10 (II)
DRAWING NO. E-PC-04
SHEET NO. 31 OF 53

LAST SAVED BY: ccabrera
PROJECT NO. 8683D10 FILE NAME: 8683D10-E-LC-01.dgn

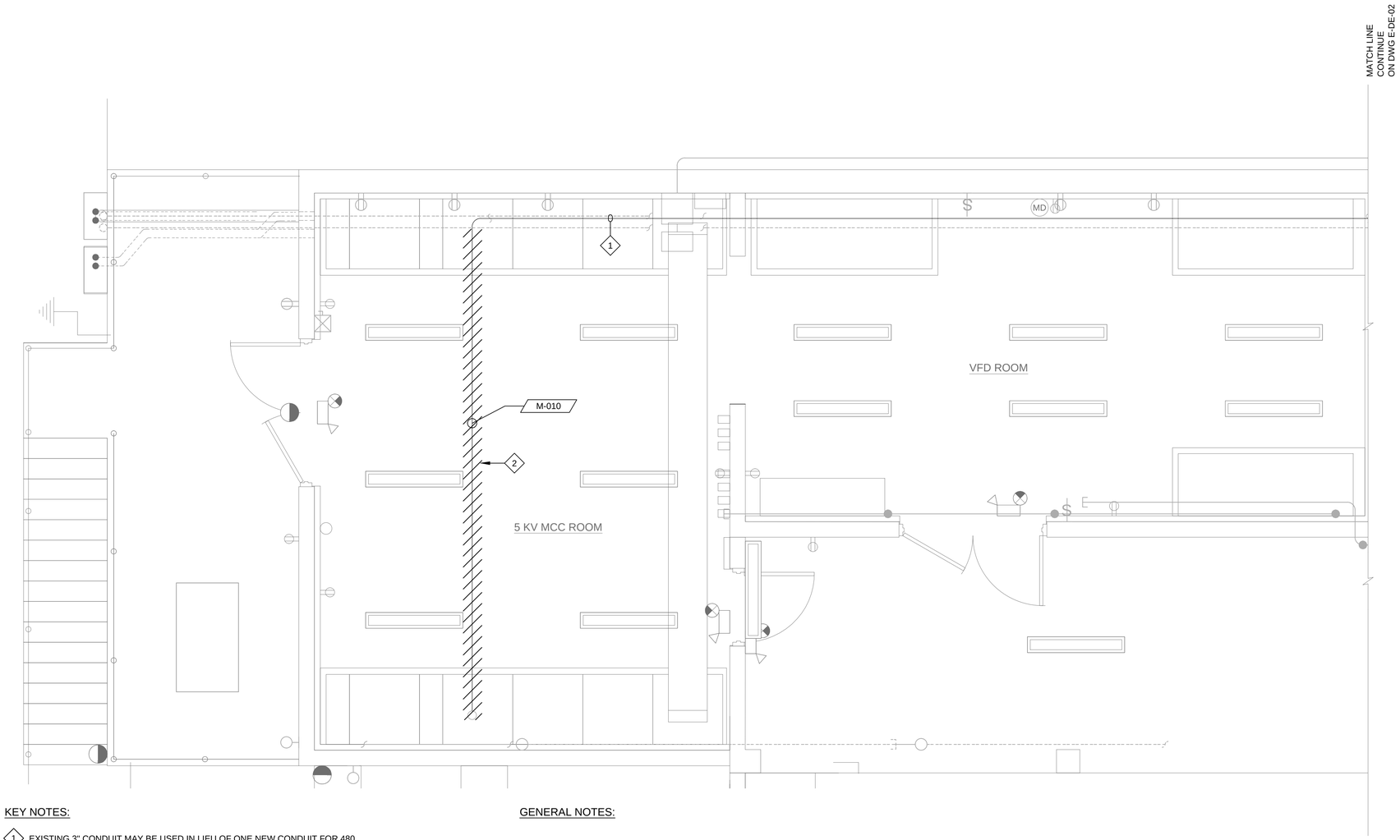

KEY NOTES:

1. EXISTING 3" CONDUIT MAY BE USED IN LIEU OF ONE NEW CONDUIT FOR 480 VOLTS FEEDER TO NEW SWITCHBOARD. HOWEVER, CAP AND LABEL SPARE CONDUIT IF NOT RE-USED.
2. REMOVE EXISTING 5KV CABLE FROM MCC-B TO EXISTING TRANSFORMER.

GENERAL NOTES:

1. ALL EXISTING ELECTRICAL EQUIPMENT SHOWN TO REMAIN UNLESS OTHERWISE NOTED.

HIGH SERVICE PUMP 1-4 BUILDING - 2nd FLOOR

SCALE: 3/8" = 1'
FILE:

REV	DATE	BY	DESCRIPTION
0	SEP - 2014	JB	ISSUED FOR BID

DESIGNED MAG
DRAWN JB
CHECKED CA
DATE SEPTEMBER, 2014
PROJECT ENGINEER

Gamboa Engineers
17433 SW 65 CT
SOUTHWEST RANCHES, FL 33331
TEL. (954)-533-1121

carollo
3440 HOLLYWOOD BOULEVARD, SUITE 465
HOLLYWOOD, FLORIDA 33021
TEL: (954) 837-0030 - FAX: (954) 837-0035

pompano beach
Florida's Warmest Welcome

CITY OF POMPANO BEACH
WTP ELECTRICAL PHASE II IMPROVEMENTS
HIGH SERVICE PUMP 1-4 BUILDING
ELECTRICAL
HIGH SERVICE PUMP 1-4 BUILDING
DEMOLITION PLAN I

VERIFY SCALES
BAR IS ONE INCH ON ORIGINAL DRAWING
0 1"
IF NOT ONE INCH ON THIS SHEET, ADJUST SCALES ACCORDINGLY

JOB NO. 8683D.10 (II)
DRAWING NO. E-DE-01
SHEET NO. 32 OF 53

LAST SAVED BY: ccabrera
PROJECT NO. 8683D10 FILE NAME: 8683D10-E-LC-01.dgn

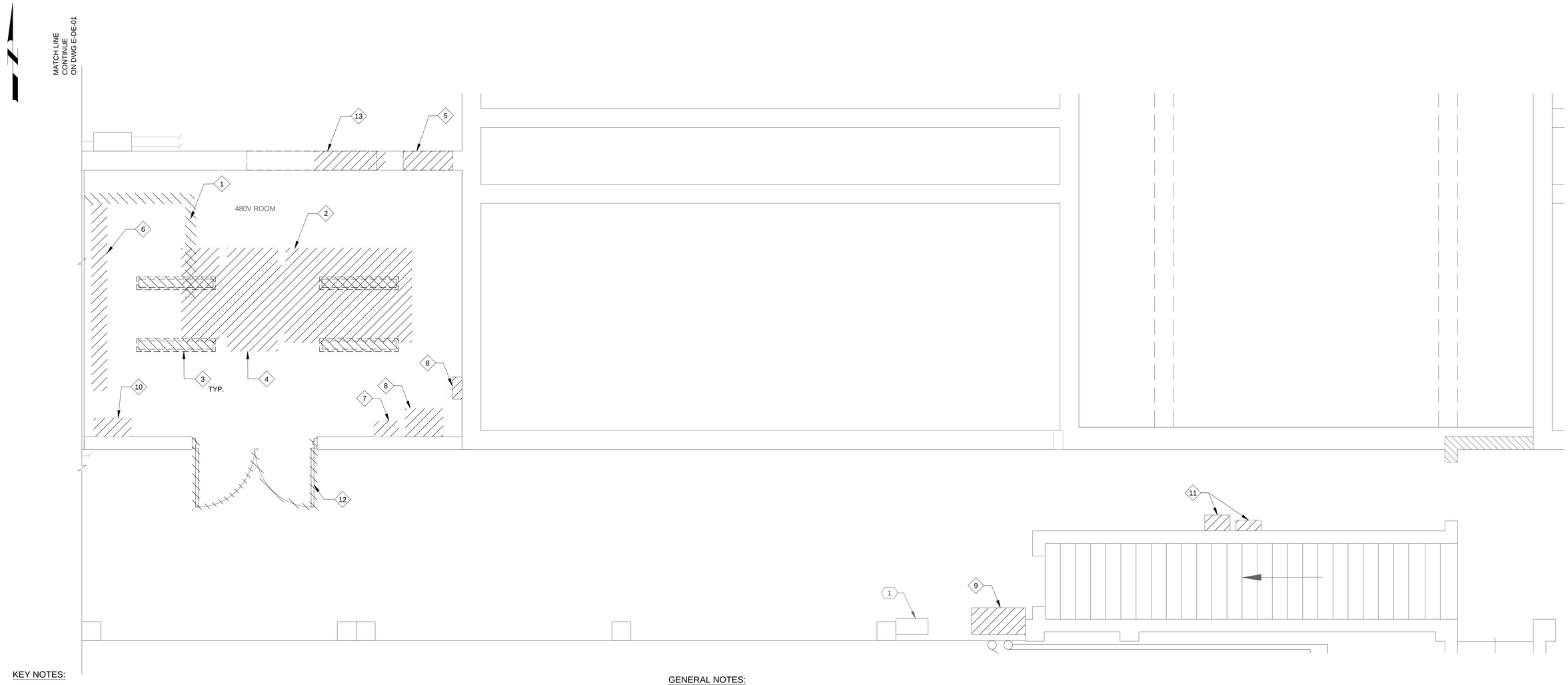

KEY NOTES:

1. REMOVE 5 KV FEEDER 3#2, 1#6G - 3" CONDUIT FROM 5KV-MCC-B..
2. REMOVE EXISTING 5KV TRANSFORMER, SWITCHBOARD 14-SB1, AND ASSOCIATED CONDUIT AND WIRING.
3. REMOVE EXISTING LIGHTING FIXTURES AND ASSOCIATED CONDUIT AND WIRING.
4. REMOVE 5 KV/480 V TRANSFORMER SEE DWG S-DHSP-01 FOR ADDITIONAL TRANSFORMER DATA AND DEMOLITION REQUIREMENTS.
5. REMOVE EXISTING EXHAUST FAN AND RELATED WIRING.
6. DEMOLISH EXISTING WIREWAY AND ASSOCIATED EQUIPMENT, SEE TEMPORARY POWER DRAWING FOR ADDITIONAL REQUIREMENTS.
7. REMOVE AND REPLACE EXISTING PANEL PP1.
8. REMOVE AND REPLACE EXISTING PANEL 14LL40 AND TRANSFORMER.
9. REMOVE EXISTING 14-MCC1 FOR BACKWASH PUMPS AND RELATED WIRING.
10. REMOVE AND REPLACE EXISTING PANEL14 PP1.
11. REMOVE AND REPLACED PANEL "B" AND CORRESPONDING SUB-PANEL
12. REMOVE AND REPLACE EXISTING DOOR.
13. REMOVE EXISTING WINDOW

KEY TAGS:

1. EXISTING MOTOR STARTER FOR HSP-1. TO REMAIN

GENERAL NOTES:

1. SEE ADDITIONAL REQUIREMENTS FOR DEMOLITION AND WORK RESTRICTIONS IN SPECIFICATIONS SECTION 01140 AND SECTION 16050.
2. PROVIDE TEMPORARY POWER TO EXISTING ELECTRICAL LOADS PRIOR TO DEMOLITION OF POWER DISTRIBUTION EQUIPMENT.
3. THE REPLACEMENT OF PANELBOARDS FOR MISCELLANEOUS CIRCUITS FOR POWER, LIGHTING AND INSTRUMENTATION REQUIRE INTERCEPTING BRANCH WIRING AND RELOCATION TO NEW PANELS.

HIGH SERVICE PUMP 1-4 BUILDING - 2nd FLOOR

SCALE: 3/8" = 1'
FILE:

REV	DATE	BY	DESCRIPTION
0	SEP - 2014	JB	ISSUED FOR BID

DESIGNED MAG
DRAWN JB
CHECKED CA
DATE SEPTEMBER, 2014
PROJECT ENGINEER

Gamboa Engineers
17433 SW 65 CT
SOUTHWEST RANCHES, FL 33331
TEL. (954)-533-1121

carollo®
3440 HOLLYWOOD BOULEVARD, SUITE 465
HOLLYWOOD, FLORIDA 33021
TEL: (954) 837-0030 - FAX: (954) 837-0035

pompano beach
Florida's Warmest Welcome

CITY OF POMPANO BEACH
WTP ELECTRICAL PHASE II IMPROVEMENTS
HIGH SERVICE PUMP 1-4 BUILDING
ELECTRICAL
HIGH SERVICE PUMP 1-4 BUILDING
DEMOLITION PLAN II

VERIFY SCALES
BAR IS ONE INCH ON ORIGINAL DRAWING
0 1"
IF NOT ONE INCH ON THIS SHEET, ADJUST SCALES ACCORDINGLY

JOB NO. 8683D.10 (II)
DRAWING NO. E-DE-02
SHEET NO. 33 OF 53

LAST SAVED BY: ccabrera
PROJECT NO. 8683D10 FILE NAME: 8683D10-E-LC-01.dgn

A — XFORMER TU-4 & SWITCHBOARD 14 SB

E-DE-02 SCALE: FILE: -

NOTES:

1- SEE CONSTRUCTION SEQUENCE AND CONSTRAINTS IN SPECIFICATIONS 01140

2-SEE DWG E-TE-01 FOR TEMPORARY POWER REQUIREMENTS

3-REMOVE SWITCHBOARD 14SB

4-REMOVE 5 KV TRANSFORMER

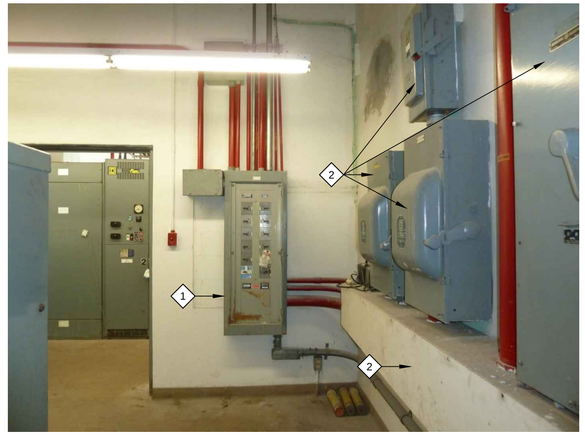

B — PANEL 14 PP1 & WEST WALL SWITCHES

E-DE-02 SCALE: FILE: -

KEY NOTES:

1. SEE DWG E-TE-01 FOR TEMPORARY POWER FOR PANEL 14PP1, REMOVE AND REPLACE PANELBOARD 14PP1
2. REMOVE WEST WALL SWITCHES, WIREWAY AND RELATED CONDUIT & WIRING

C — 208V PANEL PP1 & 14-LL-40

E-DE-02 SCALE: FILE: -

KEY NOTES:

1. REMOVE AND REPLACE EXISTING PANEL AND TRANSFORMER
2. EXISTING PANEL PP1 TO BE REMOVED AND REPLACED
3. EXISTING CONDUITS TO BE RELOCATED 9' ABOVE FINISH FLOOR. PROVIDE VERTICAL CONDUIT TO INTERCEPT PANEL AS REQUIRED.

D — 480V PANEL 14PP1A

E-PC-03 SCALE: FILE: -

NOTES:

1- SANDBLAST PANEL COVER TO REMOVE CORROSION. APPLY COATING TO MATCH ORIGINAL FINISH.

2- PROVIDE TEMPORARY INSULATED BLANKED OR OTHER MEANS TO COVER ENERGIZED PARTS WHILE RE-COATING PANEL COVER.

3- SEE DWG E-SP-01 FOR APPROXIMATE LOCATION.

E — PANEL 12 PP1 (LOCATED ON 1st FLOOR)

E-SP-01 SCALE: FILE: -

NOTES:

1- REPLACE EXISTING PANEL

1- SEE DWG E-TE-01 FOR TEMPORARY POWER

3-SEE DWG E-OL-04 FOR NEW POWER FEEDER

4-SEE DWG E-SP-01 FOR APPROXIMATE LOCATION

F — WINDOW & FAN REMOVAL

E-DE-02 SCALE: FILE: -

KEY NOTES:

1. REMOVE FAN AND RELATED CONDUIT & WIRING
2. SEE DWG 5-HSP-01 FOR NEW WALL FINISH

G — 14-MCC1 & HSP-1 STARTER

E-DE-02 SCALE: FILE: -

NOTES:

1. REMOVE 14-MCC1. SEE DWG E-TE-01 FOR TEMPORARY POWER.
2. SEE DWG E-OL-04 FOR NEW POWER FEEDERS.
3. HSP-1 STARTER TO REMAIN

F — PANEL "B" AND SUB-PANEL

E-PC-02 SCALE: FILE: -

NOTES:

REPLACE EXISTING PANEL AND SUB-PANEL.

REV	DATE	BY	DESCRIPTION
0	SEP - 2014	JB	ISSUED FOR BID

DESIGNED MAG
DRAWN JB
CHECKED CA
DATE SEPTEMBER, 2014
PROJECT ENGINEER

Gamboa Engineers
17433 SW 65 CT
SOUTHWEST RANCHES, FL 33331
TEL. (954)-533-1121

carollo
3440 HOLLYWOOD BOULEVARD, SUITE 465
HOLLYWOOD, FLORIDA 33021
TEL: (954) 837-0030 - FAX: (954) 837-0035

pompano beach
Florida's Warmest Welcome

CITY OF POMPANO BEACH
WTP ELECTRICAL PHASE II IMPROVEMENTS
HIGH SERVICE PUMP 1-4 BUILDING
ELECTRICAL
HIGH ELECTRICAL SERVICE PUMP 1-4 BUILDING
DEMOLITION DETAILS- PHOTOS

VERIFY SCALES
BAR IS ONE INCH ON ORIGINAL DRAWING
0 1"
IF NOT ONE INCH ON THIS SHEET, ADJUST SCALES ACCORDINGLY

JOB NO. 8683D.10 (II)
DRAWING NO. E-DE-03
SHEET NO. 34 OF 53

LAST SAVED BY: ccabrera

PROJECT NO. 8683D10 FILE NAME: 8683D10-E-DE-01.dgn

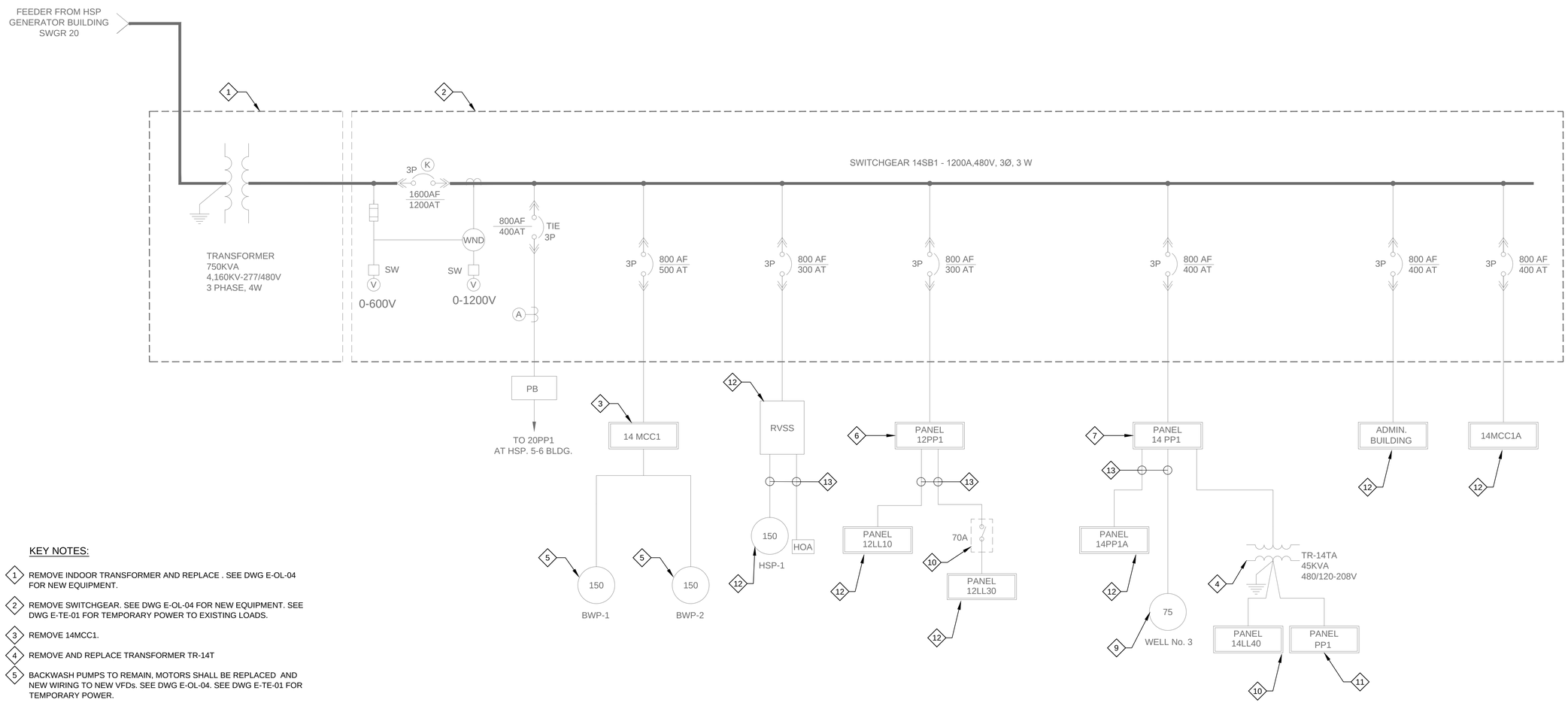

KEY NOTES:

1. REMOVE INDOOR TRANSFORMER AND REPLACE . SEE DWG E-OL-04 FOR NEW EQUIPMENT.
2. REMOVE SWITCHGEAR. SEE DWG E-OL-04 FOR NEW EQUIPMENT. SEE DWG E-TE-01 FOR TEMPORARY POWER TO EXISTING LOADS.
3. REMOVE 14MCC1.
4. REMOVE AND REPLACE TRANSFORMER TR-14T
5. BACKWASH PUMPS TO REMAIN, MOTORS SHALL BE REPLACED AND NEW WIRING TO NEW VFDs. SEE DWG E-OL-04. SEE DWG E-TE-01 FOR TEMPORARY POWER.
6. REMOVE AND REPLACE PANEL 12 PP1. SEE DWG E-OL-04.
7. REMOVE AND REPLACE PANEL 14 PP1. SEE DWG E-OL-04.
8. REMOVE AND REPLACE PANEL PP1. SEE DWG E-OL-04.
9. WELL No. 3 TO REMAIN. SEE DWG E-OL-04. SEE DWG E-TE-01 FOR TEMPORARY POWER.
10. REMOVE AND REPLACE PANEL 14LL40. SEE DWG E-OL-04.
11. REMOVE AND REPLACE PANEL PP1. SEE DWG E-OL-04.
12. EQUIPMENT TO REMAIN.
13. CONDUIT AND WIRING TO REMAIN.

GENERAL NOTES:

1. PRIOR TO DEMOLITION REFER TO SPECIFICATIONS SECTION 01140 FOR WORK RESTRICTIONS AND CONSTRUCTION SEQUENCE, SPECIFICATIONS SECTION 16050 AND TO DWGS E-TE-01 & E-TE-02 FOR TEMPORARY POWER.
2. PROVIDE TEMPORARY EQUIPMENT AND POWER WIRING TO ALL ELECTRICAL EQUIPMENT AND PROCESS EQUIPMENT FOR CONTINUOUS WATER TREATMENT PLANT OPERATION.
3. REMOVE ALL CONDUIT AND WIRING RELATED TO EQUIPMENT BEING REMOVED/DEMOLISHED UNLESS OTHERWISE NOTED.

REV	DATE	BY	DESCRIPTION
0	SEP - 2014	JB	ISSUED FOR BID

DESIGNED MAG
DRAWN JB
CHECKED CA
DATE SEPTEMBER, 2014
PROJECT ENGINEER

Gamboa Engineers
17433 SW 65 CT
SOUTHWEST RANCHES, FL 33331
TEL. (954)-533-1121

carollo
3440 HOLLYWOOD BOULEVARD, SUITE 465
HOLLYWOOD, FLORIDA 33021
TEL: (954) 837-0030 - FAX: (954) 837-0035

pompano beach
Florida's Warmest Welcome

CITY OF POMPANO BEACH
WTP ELECTRICAL PHASE II IMPROVEMENTS
HIGH SERVICE PUMP 1-4 BUILDING
ELECTRICAL
HSP 1-4 BUILDING - SUBSTATION TU-4 & SWBD 14SB1
ONE LINE - DEMOLITION

VERIFY SCALES
BAR IS ONE INCH ON ORIGINAL DRAWING
0 1"
IF NOT ONE INCH ON THIS SHEET, ADJUST SCALES ACCORDINGLY

JOB NO. 8683D.10 (II)
DRAWING NO. E-DE-04
SHEET NO. 35 OF 53

LAST SAVED BY:
PROJECT NO. 8683D10
FILE NAME: 8683D10-E-OL-01.dgn

KEY NOTES

1. PROVIDE FUSIBLE DISCONNECT SWITCH
2. PROVIDE TEMPORARY CABLE SPLICE
3. REMOVE EXISTING SWITCHES
4. REMOVE CONDUIT AND ASSOCIATER WIRING.
5. USE EXISTING WIREWAY AND WEST WALL SPACE FOR TEMPORARY POWER PROVISIONS PRIOR TO REMOVING TRANSFORMER "TU-4" AND SWITCHBOARD "14SB1"
6. PROVIDE NEW TEMPORARY WIREWAY. LOCATE IN HSP 1-4 BUILDING ON CORRIDOR WALL NEAR 480V ROOM.
7. PROVIDE PULL BOX AND INTERCEPT EXISTING CONDUITS FROM PUBLIC WORKS BUILDING. VERIFY LOCATION OF EXITING CONDUITS.
8. TEMPORARY FEEDER - (3) #600KCM & (1) #2/0 G IN 3" PVC-SCH 40.
9. TEMPORARY FEEDER - (3 - #4/0 & 1 - #2 G) IN 3" PVC-SCH 40 CONDUIT.
10. TEMPORARY FEEDER - 2 SETS OF (3 - #4/0 & 1 - #2 G) IN 3" PVC-SCH 40 CONDUIT EACH.
11. PROVIDE PULL BOX AND INTERCEPT EXISTING CONDUITS IN 480V ROOM.
12. TEMPORARY FEEDER - (3) #250 KCM & (1) #2 G) IN 3" PVC-SCH 40 CONDUIT.
13. TEMPORARY FEEDER - (3) #250 CKM & (1) #2 G) IN 2.5" PVC-SCH 40 CONDUIT EACH.
14. TEMPORARY FEEDER - (3) #3 & (1) #6 G) IN 2" PVC-SCH 40 CONDUIT.

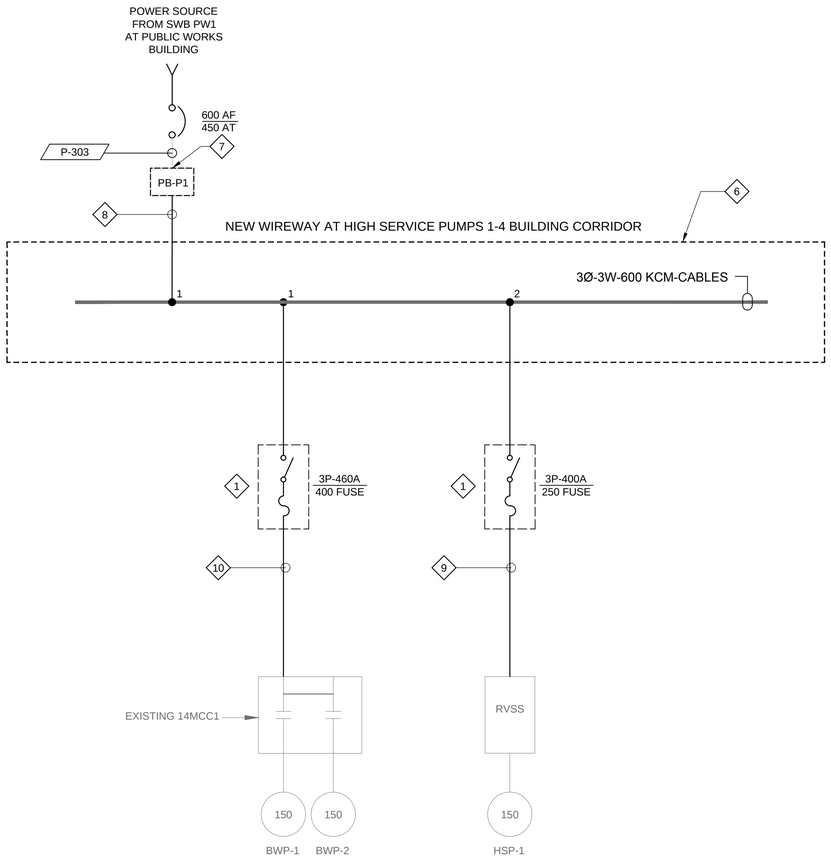

A - TEMPORARY POWER FOR BW PUMPS No. 1 & No. 2 AND HSP No. 1 - ONE LINE DIAGRAM

SCALE: NTS
FILE: 7006D10-01-080-600

B - EXISTING WIREWAY- MODIFICATIONS

SCALE: NTS
FILE:

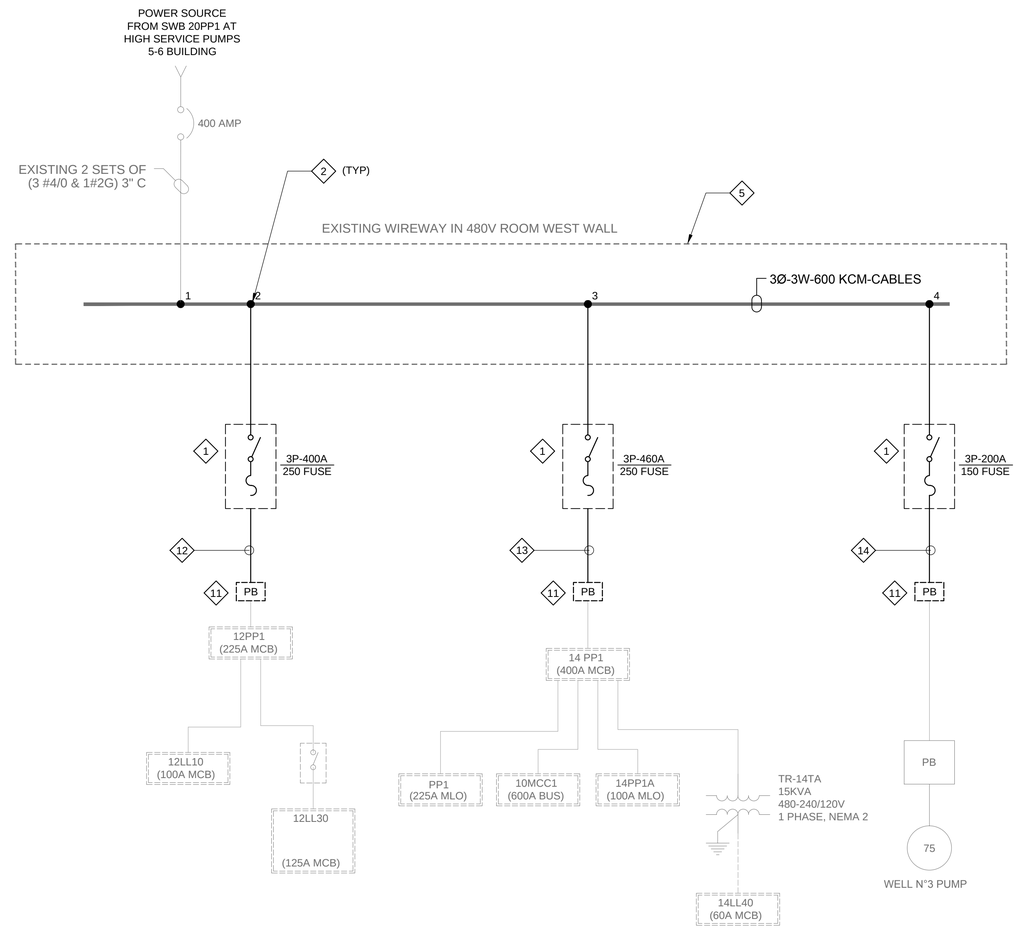

C - TEMPORARY POWER FOR PANELS 12PP1 & 14PP1 AND WELL No. 3 PUMP - ONE LINE DIAGRAM

SCALE: NTS
FILE: 7006D10-01-080-600

REV	DATE	BY	DESCRIPTION
0	SEP - 2014	JB	ISSUED FOR BID

DESIGNED: MAG
DRAWN: JB
CHECKED: CA
DATE: SEPTEMBER, 2014
PROJECT ENGINEER

carollo®
3440 HOLLYWOOD BOULEVARD, SUITE 465
HOLLYWOOD, FLORIDA 33021
TEL: (954) 837-0030 - FAX: (954) 837-0035

pompano beach
Florida's Warmest Welcome

CITY OF POMPANO BEACH
WTP ELECTRICAL PHASE II IMPROVEMENTS
HIGH SERVICE PUMP 1-4 BUILDING
ELECTRICAL
HIGH SERVICE PUMPS 1-4 BUILDING
TEMPORARY POWER ONE-LINE DIAGRAM

VERIFY SCALES
BAR IS ONE INCH ON ORIGINAL DRAWING
0 1"
IF NOT ONE INCH ON THIS SHEET, ADJUST SCALES ACCORDINGLY

JOB NO. 8683D.10 (II)
DRAWING NO. E-TE-01
SHEET NO. 36 OF 53

LAST SAVED BY: jnewberry
PROJECT NO. 8683D10
FILE NAME: 8683D10-E-GE-04.dgn

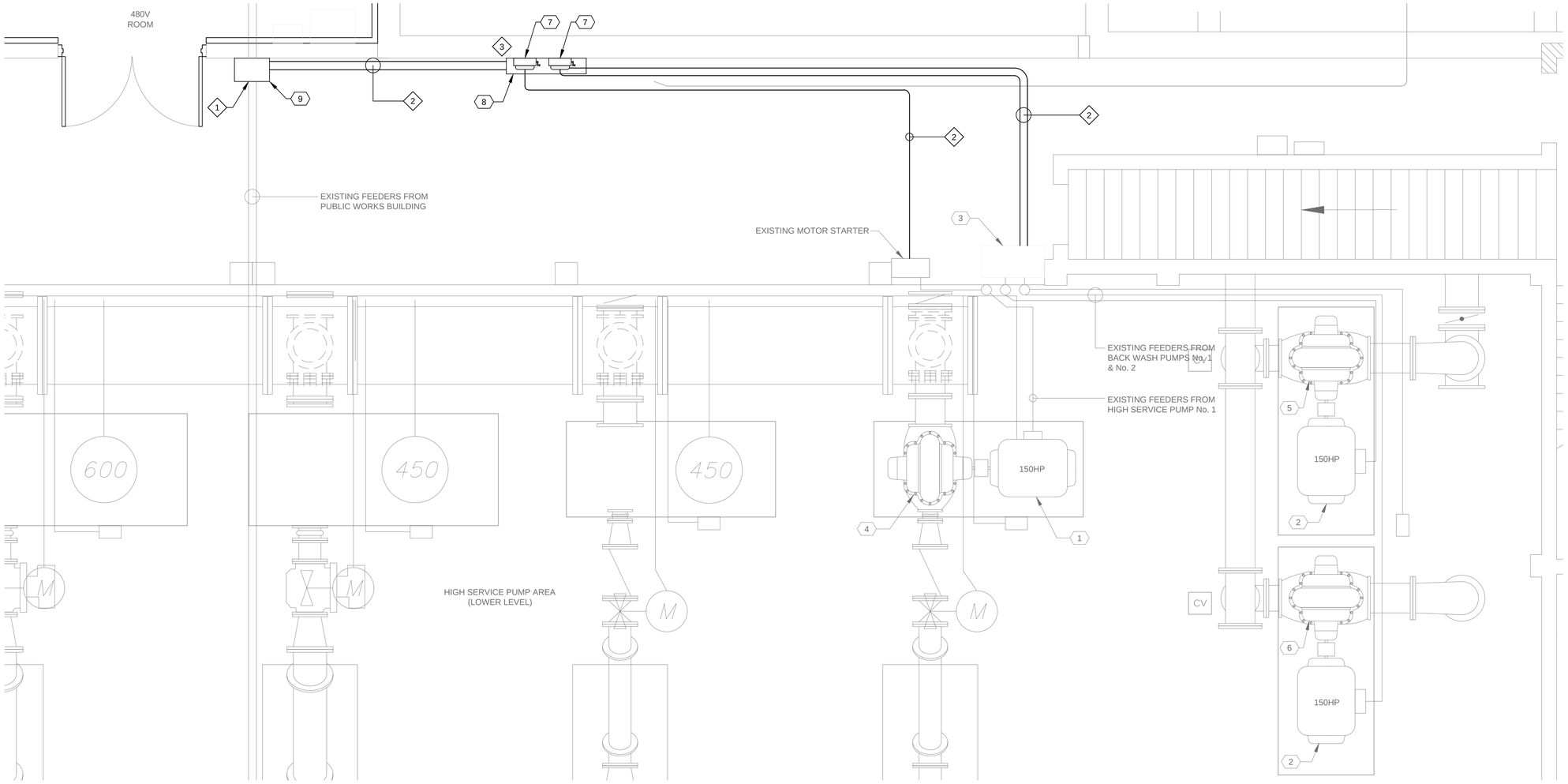

A HIGH SERVICE PUMP 1-4 BUILDING - 1ST/MEZZANINE FLOOR

SCALE: 3/8"=1'-0"
FILE: -

EQUIPMENT TAGS:

1. 150HP MOTOR
2. 150HP MOTOR
3. 14-MMC1
4. HSP No. 1
5. BWP No. 1
6. BWP No. 2
7. FUSIBLE DISCONNECT SWITCH
8. WIREWAY
9. PULL BOX PB-P1

KEY NOTES:

1. INTERCEPT EXISTING CONDUITS FROM PUBLIC WORKS BUILDING. VERIFY LOCATION OF EXITING CONDUITS.
2. TEMPORARY FEEDER.
3. PROVIDE NEW TEMPORARY WIREWAY AND DISCONNECTS. LOCATE IN HSP 1-4 BUILDING ON CORRIDOR WALL NEAR 480V ROOM.

REV	DATE	BY	DESCRIPTION
0	SEP - 2014	JB	ISSUED FOR BID

DESIGNED MAG
DRAWN JB
CHECKED CA
DATE SEPTEMBER, 2014
PROJECT ENGINEER

Gamboa Engineers
17433 SW 65 CT
SOUTHWEST RANCHES, FL 33331
TEL. (954)-533-1121

carollo
3440 HOLLYWOOD BOULEVARD, SUITE 465
HOLLYWOOD, FLORIDA 33021
TEL: (954) 837-0030 - FAX: (954) 837-0035

pompano beach
Florida's Warmest Welcome

CITY OF POMPANO BEACH
WTP ELECTRICAL PHASE II IMPROVEMENTS
HIGH SERVICE PUMP 1-4 BUILDING
ELECTRICAL
HIGH SERVICE PUMP 1-4 BUILDING
TEMPORARY POWER PLAN

VERIFY SCALES
BAR IS ONE INCH ON ORIGINAL DRAWING
0 1"
IF NOT ONE INCH ON THIS SHEET, ADJUST SCALES ACCORDINGLY

JOB NO. 8683D.10 (II)
DRAWING NO. E-TE-02
SHEET NO. 37 OF 53

LAST SAVED BY: ccabrera
PROJECT NO. 8683D10 FILE NAME: 8683D10-E-LC-01.dgn

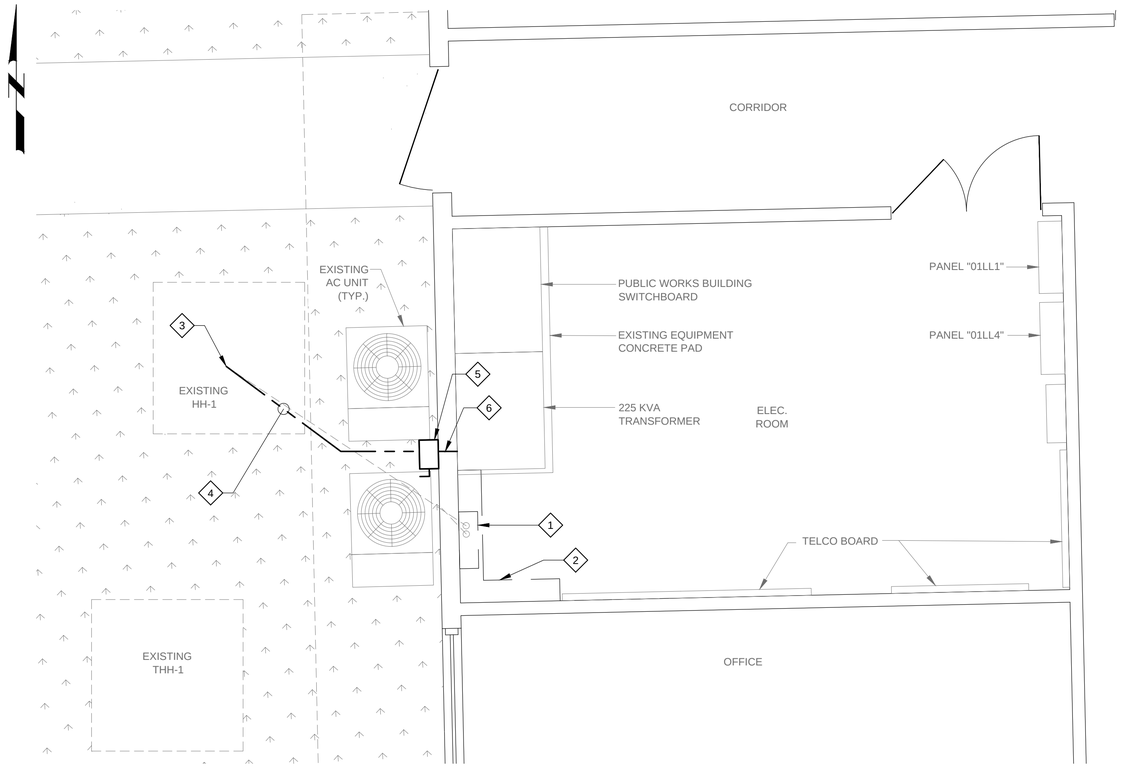

A - PUBLIC WORKS BUILDING - ELECTRICAL ROOM PLAN

SCALE: 1/2" = 1'-0"
FILE: -

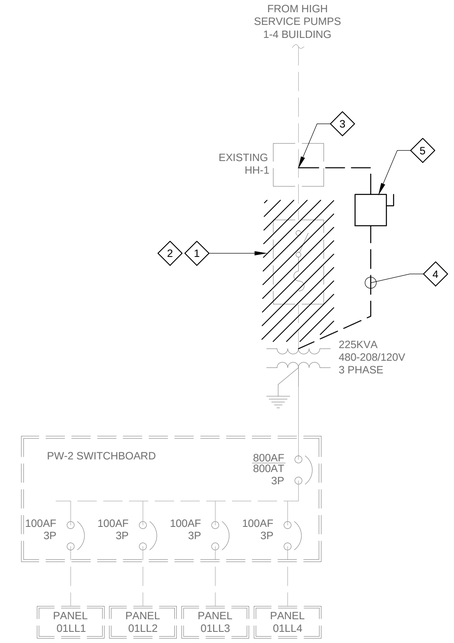

B - TEMPORARY POWER-ONE LINE DIAGRAM

SCALE: NTS
FILE: 7006D10-01-080-600

C - EXISTING ELECTRICAL EQUIPMENT- MODIFICATIONS

SCALE: NTS
FILE:

KEY NOTES:

1. REMOVE MAIN CIRCUIT BREAKER ENCLOSURE TO CLEAR SPACE FOR NEW SWITCHBOARD.
2. REMOVE ELECTRICAL SERVICE GUTTER AND ASSOCIATED WIRING TO CLEAR SPACE FOR NEW SWITCHBOARD.
3. TAP EXISTING FEEDERS FROM HIGH SERVICE PUMPS 1-4 BUILDING. AND CONNECT TO EXISTING 225 KVA TRANSFORMER.
4. TEMPORARY POWER - 2 SETS OF (3 #4/0 XHHW & 1 #2G) IN 3" PVC SHC 40 CONDUIT EACH /OR TEMPORARY FLEXIBLE CORD.
5. TEMPORARY 3 POLE, 480V, 400A FUSIBLE SWITCH, NEMA 3R.
6. ROUTE CONDUIT/CORD THRU EXISTING OUTDOOR SOFFIT, PENETRATE WALL AND CONNECT TO EXISTING TRANSFORMER. AFTER COMPLETION OF WORK, RESTORE SOFFIT AND WALL TO THEIR ORIGINAL CONDITION.

REV	DATE	BY	DESCRIPTION
0	SEP - 2014	JB	ISSUED FOR BID

DESIGNED MAG
DRAWN JB
CHECKED CA
DATE SEPTEMBER, 2014
PROJECT ENGINEER

Gamboa Engineers
17433 SW 65 CT
SOUTHWEST RANCHES, FL 33331
TEL. (954)-533-1121

carollo
3440 HOLLYWOOD BOULEVARD, SUITE 465
HOLLYWOOD, FLORIDA 33021
TEL: (954) 837-0030 - FAX: (954) 837-0035

pompano beach
Florida's Warmest Welcome

CITY OF POMPANO BEACH
WTP ELECTRICAL PHASE II IMPROVEMENTS
HIGH SERVICE PUMP 1-4 BUILDING
ELECTRICAL
PUBLIC WORKS BUILDING
TEMPORARY POWER ONE-LINE DIAGRAM

VERIFY SCALES
BAR IS ONE INCH ON ORIGINAL DRAWING
0 1"
IF NOT ONE INCH ON THIS SHEET, ADJUST SCALES ACCORDINGLY

JOB NO. 8683D.10 (II)
DRAWING NO. E-TE-03
SHEET NO. 38 OF 53

LAST SAVED BY: ccabrera
PROJECT NO. 8683D10
FILE NAME: 8683D10-E-LC-01.dgn

CONDUIT SCH SWITCH

WTP ELECTRICAL MASTER PLAN PHASE II IMPROVEMENTS

HIGH SERVICES PUMP 1-4 FACILITY & PUBLIC WORKS BLDG

ENGINEER	MAG
REVISION	0
DATE	9/15/14

CONDUIT			CONDUCTORS			GROUND				
NUMBER	DWG	SIZE	#	SIZE	TYPE	#	SIZE	TYPE	DESCRIPTION	CONNECTING SEGMENTS
M-010 EXISTING	E-DE-01	3"	3	#2:8KV	8KV-EPR	1	#6	XHHW-2	FR: UNIT SUBSTATION TU-4 TO: 5 KV MCC-B 3 #2:8KV >> REMOVE EXIST CABLES	
M-106	E-SP-03 E-PC-01	5"	1	#4/0	XHHW-2				FR: 5 KV MCC-A TO: GROUNDING GRID VIA EXIST PB-C 1 #4/0 >> ADD GROUNDING CONDUCTOR	
M-100 EXISTING	E-SP-03	5"	3	500:8KV	8KV-EPR	1	#2	XHHW-2	FR: 5 KV MCC-A TO: 20 SWGR (VIA PB-C, MH-10, PB-B) 3 500:8KV >> 5 KV MCC-A (FEEDER NO. 1 LOOP) EXISTING FEEDER SHOWN FOR REFERENCE	
M-101 EXISTING	E-SP-03	5"	3	500:8KV	8KV-EPR	1 1	#2 #4/0	XHHW-2 XHHW-2	FR: 5 KV MCC-B TO: 20 SWGR (VIA PB-D, MH-10) 3 500:8KV >> 5 KV MCC-B (FEEDER NO. 2 LOOP) EXISTING FEEDER SHOWN FOR REFERENCE	
M-111A EXISTING CONDUIT	E-OL-03 E-SP-03	5"	3	3/0:8KV	8KV-EPR	1	#3	XHHW-2	FR: 5 KV MCC-B TO: MH-10 (VIA PB-E; DUCTBANK SECTIONS D,E,F) 3 3/0:8KV >> NEW FEEDER	
M-111B	E-OL-03 E-SP-03	5"	3	3/0:8KV	8KV-EPR	1	# 3	XHHW-2	FR: MH-10 (& 5 KV MCC-B) TO: TRANSFORMER TU-4 (OUTDOOR) 3 3/0:8KV >> NEW FEEDER	
M-112	E-SP-03	5"	1	PULL	ROPE				FR: MH-10 TO: TRANSFORMER TU-4 (OUTDOOR) 1 PULL >> SPARE	
M-115 EXISTING	E-SP-03	5"	1	PULL	ROPE				FR: 5 KV MCC-B TO: MH-10 (VIA PB-E) 1 PULL >> EXISTING SPARE SHOWN FOR REFERENCE	
M-120 EXISTING	E-SP-03	5"	3	4/0:8KV	8KV-EPR	1	#2	XHHW-2	FR: 5 KV MCC-B TO: MH-1 (SPLICE IN MANHOLE) 3 4/0:8KV >> 5 KV MCC-B (FEEDER NO. 2 LOOP) SHOWN FOR REFERENCE	
M-121	E-SP-03	4"	1	PULL	ROPE				FR: EXISTING MANHOLE MH-1 (CONDUIT) TO: MH-10 1 PULL >> INTERCEPT EXIST CONDUIT AND EXTEND TO MH-10	
M-130 EXISTING	E-PC-01	5"	3	4/0:8KV	8KV-EPR	1	#4	XHHW-2	FR: EXIST 5 KV MCC (AT MEZZANINE) TO: 5 KV MCC-B 3 4/0:8KV >> EXIST TEMPORARY FEEDER SHOWN FOR REFERENCE TO BE REMOVED BY OTHERS	
P-300(a)	E-SP-02 E-OL-05 E-OL-06 E-PC-04	4"	3	600	XHHW-2	1	#2/0	XHHW-2	FR: MEMBRANE BLDG SWITCHGEAR MF-1 TO: PUBLIC WORKS SWBD "PW-1' 3 600 >> FEEDER TO SWITCHBOARD PW VIA PULL BOXES PB-M, PB-N PB-Q, PB-R	
P-300(b)	E-SP-02 E-OL-05 E-OL-06 E-PC-04	4"	3	600	XHHW-2	1	#2/0	XHHW-2	FR: MEMBRANE BLDG SWITCHGEAR MF-1 TO: PUBLIC WORKS SWBD "PW-1" 3 600 >> FEEDER TO SWITCHBOARD PW VIA PULL BOXES PB-M, PB-N PB-Q, PB-R	
P-301	E-OL-06	3"	3	500	XHHW-2	1	#3	XHHW-2	FR: PUBLIC WORKS SWITCHBOARD PW-1 TO: EXIST TRANSFORMER PW 3 500 >>	
P-302(a) EXISTING	E-OL-06	4"	4	500	XHHW-2	1	#1/0	XHHW-2	FR: EXIST TRANSFORMER PW TO: EXIST SWITHBOARD PW-2 4 500 >> VERIFY EXISTING CABLE SIZE & UPDATE AS-BUILT DWGS	
P-302(b) EXISTING	E-OL-06	4"	4	500	XHHW-2	1	#1/0	XHHW-2	FR: EXIST TRANSFORMER PW TO: EXIST SWITHBOARD PW-2 4 500 >> VERIFY EXISTING CABLE SIZE & UPDATE AS-BUILT DWGS	

CONDUIT SCH SWITCH

WTP ELECTRICAL MASTER PLAN PHASE II IMPROVEMENTS

HIGH SERVICES PUMP 1-4 FACILITY & PUBLIC WORKS BLDG

ENGINEER	MAG
REVISION	0
DATE	9/15/14

CONDUIT			CONDUCTORS			GROUND				
NUMBER	DWG	SIZE	#	SIZE	TYPE	#	SIZE	TYPE	DESCRIPTION	CONNECTING SEGMENTS
PW-303A (a)	E-SP-02 E-OL-06	3"	3	#4/0	XHHW-2	1	#3	XHHW-2	FR: SWITCHBOARD PW-1 TO: SWITCHBOARD "14SB-1'; (HH-2) 3 #4/0 >> NEW CABLES VIA EXISTING CONDUIT; HH-2	
P-303A(b)	E-SP-02 E-OL-06	3"	3	#4/0	XHHW-2	1	#3	XHHW-2	FR: SWITCHBOARD PW-1 TO: SWITCHBOARD "14SB-1'; (HH-2) 3 #4/0 >> NEW CABLES VIA EXISTING CONDUIT; HH-2	
P-303B(a) EXISTING	E-SP-02 E-OL-04	3"	3	#4/0	XHHW-2	1	#3	XHHW-2	FR: SWITCHBOARD PW-1; (HH-2) TO: SWITCHBOARD "14SB-1'; PB-P1 3 #4/0 >> EXISTING CABLES VIA EXISTING CONDUIT; HH-2 NEW SPLICES	
P-303B(b) EXISTING	E-SP-02 E-OL-04	3"	3	#4/0	XHHW-2	1	#3	XHHW-2	FR: SWITCHBOARD PW-1; (HH-2) TO: SWITCHBOARD "14SB-1'; PB-P1 3 #4/0 >> EXISTING CABLES VIA EXISTING CONDUIT; HH-2 NEW SPLICES	
P-303C(a)	E-OL-04 E-PC-01	3"	3	#4/0	XHHW-2	1	#3	XHHW-2	FR: SWITCHBOARD PW-1; (PB-P1) TO: SWITCHBOARD "14SB-1' 3 #4/0 >> NEW FEEDER NEW SPLICES	
P-303C(b)	E-OL-04 E-PC-01	3"	3	#4/0	XHHW-2	1	#3	XHHW-2	FR: SWITCHBOARD PW-1; (PB-P1) TO: SWITCHBOARD "14SB-1' 3 #4/0 >> NEW FEEDER NEW SPLICES	
P-401(a)	E-OL-01 E-LO-03 E-OL-04 E-OL-04	4"	3	600	XHHW-2	1	#4/0	XHHW-2	FR: TRANSFORMER TU-4 TO: OUTDOOR SWITCHBOARD / BREAKER 3 600 >> UNDERGROUND FEEDER	
P-401(b)	E-OL-01 E-LO-03 E-OL-04 E-OL-04	4"	3	600	XHHW-2	1	#4/0	XHHW-2	FR: TRANSFORMER TU-4 TO: OUTDOOR SWITCHBOARD / BREAKER 3 600 >> UNDERGROUND FEEDER	
P-401(c)	E-LO-03 E-OL-04 E-SP-03	4"	3	600	XHHW-2	1	#4/0	XHHW-2	FR: TRANSFORMER TU-4 TO: OUTDOOR SWITCHBOARD / BREAKER 3 600 >> UNDERGROUND FEEDER	
P-401(d)	E-LO-03 E-OL-04 E-SP-03	4"	3	600	XHHW-2	1	#4/0	XHHW-2	FR: TRANSFORMER TU-4 TO: OUTDOOR SWITCHBOARD / BREAKER 3 600 >> UNDERGROUND FEEDER	
P-402A(a)	E-LO-02 E-OL-03 E-OL-04 E-SP-03	4"	3	600	XHHW-2	1	#4/0	XHHW-2	FR: OUTDOOR SWITCHBOARD / BREAKER TO: SWITCHBOARD "14SB-1" (PB-G) 3 600 >> VIA NEW CONDUIT AND PULL BOX PB-E	
P-402A(b)	E-LO-01 E-OL-03 E-OL-04 E-SP-03	4"	3	600	XHHW-2	1	#4/0	XHHW-2	FR: OUTDOOR SWITCHBOARD / BREAKER TO: SWITCHBOARD "14SB-1" (PB-G) 3 600 >> VIA NEW CONDUIT AND PULL BOX PB-E	
P-402A(c)	E-LO-01 E-OL-03 E-OL-04 E-SP-03	4"	3	600	XHHW-2	1	#4/0	XHHW-2	FR: OUTDOOR SWITCHBOARD / BREAKER TO: SWITCHBOARD "14SB-1" (PB-G) 3 600 >> VIA NEW CONDUIT AND PULL BOX PB-E	
P-402A(d)	E-LO-01 E-OL-03 E-OL-04 E-SP-03	4"	3	600	XHHW-2	1	#4/0	XHHW-2	FR: OUTDOOR SWITCHBOARD / BREAKER TO: SWITCHBOARD "14SB-1" (PB-G) 3 600 >> VIA NEW CONDUIT AND PULL BOX PB-E	
P-402B(a)	E-LO-01 E-OL-03 E-OL-04 E-SP-03	4"	3	600	XHHW-2	1	#4/0	XHHW-2	FR: OUTDOOR SWITCHBOARD / BREAKER; (PB-G) TO: SWITCHBOARD "14SB-1"; (PB-H) 3 600 >> NEW CABLES VIA EXIST CONDUITS	
P-402B(b)	E-LO-01 E-OL-03 E-OL-04 E-SP-03	4"	3	600	XHHW-2	1	#4/0	XHHW-2	FR: OUTDOOR SWITCHBOARD / BREAKER; (PB-G) TO: SWITCHBOARD "14SB-1"; (PB-H) 3 600 >> NEW CABLES VIA EXIST CONDUITS	

REV	DATE	BY	DESCRIPTION
0	SEP - 2014	JB	ISSUED FOR BID

DESIGNED MAG
DRAWN JB
CHECKED CA
DATE SEPTEMBER, 2014
PROJECT ENGINEER

Gamboa Engineers
17433 SW 65 CT
SOUTHWEST RANCHES, FL 33331
TEL. (954)-533-1121

carollo
3440 HOLLYWOOD BOULEVARD, SUITE 465
HOLLYWOOD, FLORIDA 33021
TEL: (954) 837-0030 - FAX: (954) 837-0035

pompano beach
Florida's Warmest Welcome

CITY OF POMPANO BEACH
WTP ELECTRICAL PHASE II IMPROVEMENTS
HIGH SERVICE PUMP 1-4 BUILDING
ELECTRICAL
CONDUIT SCHEDULE I

VERIFY SCALES
BAR IS ONE INCH ON ORIGINAL DRAWING
0 1"
IF NOT ONE INCH ON THIS SHEET, ADJUST SCALES ACCORDINGLY

JOB NO. 8683D.10 (II)
DRAWING NO. E-CW-01
SHEET NO. 39 OF 53

LAST SAVED BY: jnewberry
PROJECT NO. 8683D10
FILE NAME: 8683D10-E-GE-04.dgn

CONDUIT SCH SWITCH

WTP ELECTRICAL MASTER PLAN PHASE II IMPROVEMENTS

HIGH SERVICES PUMP 1-4 FACILITY & PUBLIC WORKS BLDG

ENGINEER	MAG
REVISION	0
DATE	9/15/14

CONDUIT			CONDUCTORS			GROUND				
NUMBER	DWG	SIZE	#	SIZE	TYPE	#	SIZE	TYPE	DESCRIPTION	CONNECTING SEGMENTS
P-402B(c)	E-LO-01 E-OL-03 E-OL-04 E-SP-03	4"	3	600	XHHW-2	1	#4/0	XHHW-2	FR: OUTDOOR SWITCHBOARD / BREAKER; (PB-G) TO: SWITCHBOARD "14SB-1"; (PB-H) 3 600 >> NEW CABLES VIA EXIST CONDUITS	
P-402B(d)	E-LO-01 E-OL-03 E-OL-04 E-SP-03	4"	3	600	XHHW-2	1	#4/0	XHHW-2	FR: OUTDOOR SWITCHBOARD / BREAKER; (PB-G) TO: SWITCHBOARD "14SB-1"; (PB-H) 3 600 >> NEW CABLES VIA EXIST CONDUITS	
P-402C(a)	E-LO-01 E-OL-04 E-SP-03 E-PC-01	4"	3	600	XHHW-2	1	#4/0	XHHW-2	FR: OUTDOOR SWITCHBOARD / BREAKER; (PB-H) TO: SWITCHBOARD "14SB-1" 3 600 >> NEW FEEDER	
P-402C(b)	E-LO-01 E-OL-04 E-SP-03 E-PC-01	4"	3	600	XHHW-2	1	#4/0	XHHW-2	FR: OUTDOOR SWITCHBOARD / BREAKER; (PB-H) TO: SWITCHBOARD "14SB-1" 3 600 >> NEW FEEDER	
P-402C(c)	E-LO-01 E-OL-04 E-SP-03 E-PC-01	4"	3	600	XHHW-2	1	#4/0	XHHW-2	FR: OUTDOOR SWITCHBOARD / BREAKER; (PB-H) TO: SWITCHBOARD "14SB-1" 3 600 >> NEW FEEDER	
P-402C(d)	E-LO-01 E-OL-04 E-SP-03 E-PC-01	4"	3	600	XHHW-2	1	#4/0	XHHW-2	FR: OUTDOOR SWITCHBOARD / BREAKER; (PB-H) TO: SWITCHBOARD "14SB-1" 3 600 >> NEW FEEDER	
P-403A(a)	E-LO-01 E-OL-04 E-PC-01	4"	3	300	XHHW-2	1	#2	XHHW-2	FR: SWITCHBOARD "14SB-1" TO: OUTDOOR PULL BOX PB-(20PP1)-A 3 300 >> NEW FEEDER; SPLICED AT PULL BOX PB-(20PP1)-A MATCH EXISTING CABLE SIZE AND UPDATE AS-BUILT DWGS	
P-403A(b)	E-LO-01 E-OL-04 E-PC-01	4"	3	300	XHHW-2	1	#2	XHHW-2	FR: SWITCHBOARD "14SB-1" TO: OUTDOOR PULL BOX PB-(20PP1)-A 3 300 >> NEW FEEDER; SPLICED AT PULL BOX PB-(20PP1)-A MATCH EXISTING CABLE SIZE AND UPDATE AS-BUILT DWGS	
P-403B EXISTING	E-OL-04 E-PC-01	4"							FR: OUTDOOR PULL BOX "PB-(20PP1)-A" TO: EXISTING PULL BOX "PB-(20PP1)-B" VERIFY EXISTING CABLE SIZE AND UPDATE AS-BUILT DWGS NEW COATING TO EXISTING CONDUIT	
P-405A	E-OL-04 E-PC--01	2.5"	3	#4/0	XHHW-2	1	#4	XHHW-2	FR: SWITCHBOARD 14SB-1 TO: BACKWASH PUMP 1-VFD 3 #4/0 >>	
P-405B	E-OL-04 E-PC--01 E-PC-02	3"	3	#4/0	XHHW-2	1	#4	XHHW-2	FR: BACKWASH PUMP 1-VFD TO: BACKWASH PUMP 1 3 #4/0 >> SHIELDED VFD TYPE CABLE	
C-405A	E-PC-01 E-PC-02 E-CS-02	1"	12	#14	XHHW-2	1	#14	XHHW-2	FR: BACKWASH PUMP 1-VFD TO: EXISTING PLC-2 AT FILTER CTL. ROOM; PB-S1 12 #14 >> DISCRETE CONTROLS	
S-405	E-PC-01 E-PC-02 E-CS-02	0.75"	2	2/C-#16S	9342	1	#14	XHHW-2	FR: BACKWASH PUMP 1-VFD TO: EXISTING PLC-2 AT FILTER CTL. ROOM; PB-S1 1 2/C-#16S >> PUMP SPEED COMMAND 1 2/C-#16S >> PUMP SPEED FEEDBACK	
C-405B	E-OL-04 E-PC--01 E-PC-02 E-CS-02	1"	2 14	#12 #14	XHHW-2 XHHW-2	1	#12	XHHW-2	FR: BACKWASH PUMP 1-VFD TO: BACKWASH PUMP 1 CONTROL STATION JB 2 #14 >> LOCKOUT STOP 2 #14 >> START PUSH BUTTON 2 #14 >> MOTOR OVERTEMP SWITCH 2 #14 >> CHECK VALVE SOLENOID 2 #14 >> CHECK VALVE OPENED 2 #14 >> CHECK VALVE CLOSED 2 #12 >> MOTOR WINDING HEATER 2 #14 >> SPARE	
C-405C	E-OL-04 E-PC-02 E-CS-02	0.75"	4	#14	XHHW-2	1	#14	XHHW-2	FR: BACKWASH PUMP 1 CONTROL STATION JB TO: CONTROL STATION 4 #14 >> START- STOP PUSH BUTTON	

CONDUIT SCH SWITCH

WTP ELECTRICAL MASTER PLAN PHASE II IMPROVEMENTS

HIGH SERVICES PUMP 1-4 FACILITY & PUBLIC WORKS BLDG

ENGINEER	MAG
REVISION	0
DATE	9/15/14

CONDUIT			CONDUCTORS			GROUND				
NUMBER	DWG	SIZE	#	SIZE	TYPE	#	SIZE	TYPE	DESCRIPTION	CONNECTING SEGMENTS
C-405D	E-OL-04 E-PC-02 E-CS-02	0.75"	2 2	#12 #14	XHHW-2 XHHW-2	1	#12	XHHW-2	FR: BACKWASH PUMP 1 CONTROL STATION JB TO: BACKWASH PUMP1 MOTOR TEMP SWITCH 2 #14 >> OVEERTEMP SWITCH 2 #12 >> MOTOR WINDING HEATER	
C-405E	E-OL-04 E-PC-02 E-CS-02	0.75"	6	#14	XHHW-2	1	#14	XHHW-2	FR: BACKWASH PUMP 1 CONTROL STATION JB TO: BACKWASH PUMP1 CHECK VALVE 2 #14 >> CHECK VALVE SOLENOIDE 2 #14 >> CHECK VALVE OPENED 2 #14 >> CHECK VALVE CLOSED	
P-406A	E-OL-04 E-PC-01 E-PC-02	2.5"	3	#4/0	XHHW-2	1	#4	XHHW-2	FR: SWITCHBOARD "14SB-1" TO: PANELBOARD 12PP1; PB-P4 3 #4/0 >>	
P-406B	E-OL-04 E-PC-02	2.5"	3	#4/0	XHHW-2	1	#4	XHHW-2	FR: SWITCHBOARD "14SB-1"; PB-P4 TO: PANELBOARD 12PP1 3 #4/0 >>	
P-407A	E-OL-04 E-PC-01 E-PC-02	2.5"	3	#4/0	XHHW-2	1	#4	XHHW-2	FR: SWITCHBOARD "14SB-1" TO: PB-P3; FOR HSP-1 MOTOR STARTER 3 #4/0 >>	
P-407B EXISTING	E-OL-04 E-PC-01 E-PC-02	2.5"	3	#4/0	XHHW-2	1	#4	XHHW-2	FR: SWITCHBOARD "14SB-1"; PB-P3 TO: HSP-1; EXIST MOTOR STARTER 3 #4/0 >> VERIFY CABLE SIZE AND UPDATE AS-BUILT DWGS	
P-408	E-OL-04 E-PC-01	1.5"	3	#3	XHHW-2	1	#6	XHHW-2	FR: SWITCHBOARD "14SB-1" TO: TRANSFORMER T-14A 3 #3 >>	
P-409	E-OL-04 E-PC-01	2.5"	3	#4/0	XHHW-2	1	#4	XHHW-2	FR: TRANSFORMER T-14A TO: PANELBOARD "14LL40" 3 #4/0 >>	
P-410	E-OL-04 E-PC-01 E-PC-02	2"	3	#2	XHHW-2	1	#6	XHHW-2	FR: PANELBOARD "14LL40" TO: PANELBOARD "B" 3 #2 >>	
P-411A	E-OL-04 E-PC-01	2"	3	#2/0	XHHW-2	1	#4	XHHW-2	FR: SWITCHBOARD "14SB-1" TO: OUTDOOR WELL No.3 PB-P2 3 #2/0 >>	
P-411B	E-OL-04 E-PC-01	2"	3	#2/0	XHHW-2	1	#4	XHHW-2	FR: OUTDOOR WELL No.3 PB-P2 TO: OUTDOOR FEEDER'S PB-H 3 #2/0 >>	
P-411C	E-OL-04 E-PC-01 E-SP-03	2"	3	#2/0	XHHW-2	1	#4	XHHW-2	FR: OUTDOOR FEEDER'S PB-H TO: OUTDOOR FEEDER'S PB-G 3 #2/0 >> VIA EXIST EMBEDDED CONDUIT AND NEW CONDUIT EXTENSION	
P-411D	E-OL-04 E-PC-01 E-SP-03 E-SP-03	2"	3	#2/0	XHHW-2	1	#4	XHHW-2	FR: OUTDOOR FEEDER'S PB-G TO: EXIST OUTDOOR CONDUIT AND PULL BOX 3 #2/0 >> INTERCEPT EXIST CONDUIT AND EXTEND TO PULL BOX PB-G	
P-412	E-OL-04 E-PC-01	1.5"	3	#3	XHHW-2	1	#6	XHHW-2	FR: SWITCHBOARD "14SB-1" TO: TRANSFORMER T-14B 3 #3 >>	
P-413	E-OL-04 E-PC-01	2.5"	3	#4/0	XHHW-2	1	#4	XHHW-2	FR: TRANSFORMER T-14B TO: PANELBOARD "PP1" 3 #4/0 >>	
P-414A	E-OL-04 E-PC-03	2.5"	3	#4/0	XHHW-2	1	#4	XHHW-2	FR: SWITCHBOARD 14SB-1 TO: EXIST "10MCC1"; (PB-P5) 3 #4/0 >>	
P-414B EXISTING	E-OL-04 E-PC-03	2.5"	3	#4/0	XHHW-2	1	#4	XHHW-2	FR: SWITCHBOARD 14SB-1; (PB-P5) TO: EXIST "10MCC1" 3 #4/0 >> VERIFY EXISTING CABLE SIZE AND UPDATE AS-BUILT DWGS	
P-415	E-OL-04 E-PC-01	2.5"	3	250	XHHW-2	1	#4	XHHW-2	FR: SWITCHBOARD 14SB-1; (PB-P5) TO: PANELBOARD "14PP1" 3 250 >>	
P-416A	E-OL-04 E-PC--01	2.5"	3	#4/0	XHHW-2	1	#4	XHHW-2	FR: SWITCHBOARD 14SB-1 TO: BACKWASH PUMP 2-VFD 3 #4/0 >>	

REV	DATE	BY	DESCRIPTION
0	SEP - 2014	JB	ISSUED FOR BID

DESIGNED MAG
DRAWN JB
CHECKED CA
DATE SEPTEMBER, 2014
PROJECT ENGINEER

Gamboa Engineers
17433 SW 65 CT
SOUTHWEST RANCHES, FL 33331
TEL. (954)-533-1121

carollo
3440 HOLLYWOOD BOULEVARD, SUITE 465
HOLLYWOOD, FLORIDA 33021
TEL: (954) 837-0030 - FAX: (954) 837-0035

pompano beach
Florida's Warmest Welcome

CITY OF POMPANO BEACH
WTP ELECTRICAL PHASE II IMPROVEMENTS
HIGH SERVICE PUMP 1-4 BUILDING
ELECTRICAL
CONDUIT SCHEDULE II

VERIFY SCALES
BAR IS ONE INCH ON ORIGINAL DRAWING
0 1"
IF NOT ONE INCH ON THIS SHEET, ADJUST SCALES ACCORDINGLY

JOB NO. 8683D.10 (II)
DRAWING NO. E-CW-02
SHEET NO. 40 OF 53

LAST SAVED BY: jnewbery
PROJECT NO. 8683D10 FILE NAME: 8683D10-E-GE-04.dgn

CONDUIT SCH SWITCH

WTP ELECTRICAL MASTER PLAN PHASE II IMPROVEMENTS

HIGH SERVICES PUMP 1-4 FACILITY & PUBLIC WORKS BLDG

ENGINEER	MAG
REVISION	0
DATE	9/15/14

CONDUIT			CONDUCTORS			GROUND				
NUMBER	DWG	SIZE	#	SIZE	TYPE	#	SIZE	TYPE	DESCRIPTION	CONNECTING SEGMENTS
P-416B	E-OL-04 E-PC--01 E-PC-02	3"	3	#4/0	XHHW-2	1	#4	XHHW-2	FR: BACKWASH PUMP 2-VFD TO: BACKWASH PUMP 2 3 #4/0 >> SHIELDED VFD TYPE CABLE	
C-416A	E-PC-01 E-PC-02 E-CS-02	1"	12	#14	XHHW-2	1	#14	XHHW-2	FR: BACKWASH PUMP 2-VFD TO: EXISTING PLC-2 AT FILTER CTL. ROOM; PB-S1 12 #14 >> DISCRETE CONTROLS	
S-416	E-PC-01 E-PC-02 E-CS-02	1"	2	2/C-#16S	9342	1	#14	XHHW-2	FR: BACKWASH PUMP 2-VFD TO: EXISTING PLC-2 AT FILTER CTL. ROOM; PB-S1 1 2/C-#16S >> PUMP SPEED COMMAND 1 2/C-#16S >> PUMP SPEED FEEDBACK	
C-416B	E-OL-04 E-PC--01 E-PC-02 E-CS-02	1"	2 14	#12 #14	XHHW-2 XHHW-2	1	#12	XHHW-2	FR: BACKWASH PUMP 2-VFD TO: BACKWASH PUMP 2 CONTROL STATION JB 2 #14 >> LOCKOUT STOP 2 #14 >> START PUSH BUTTON 2 #14 >> MOTOR OVERTEMP SWITCH 2 #14 >> CHECK VALVE SOLENOID 2 #14 >> CHECK VALVE OPENED 2 #14 >> CHECK VALVE CLOSED 2 #12 >> MOTOR WINDING HEATER 2 #14 >> SPARE	
C-416C	E-OL-04 E-PC-02 E-CS-02	0.75"	4	#14	XHHW-2	1	#14	XHHW-2	FR: BACKWASH PUMP 2 CONTROL STATION JB TO: CONTROL STATION 2 #14 >> LOCKOUT STOP PUSH BUTTON 2 #14 >> START PUSH BUTTON	
C-416D	E-OL-04 E-PC-02 E-CS-02	0.75"	2 2	#12 #14	XHHW-2 XHHW-2	1	#12	XHHW-2	FR: BACKWASH PUMP 2 CONTROL STATION JB TO: BACKWASH PUMP2 MOTOR TEMP SWITCH 2 #14 >> OVEERTEMP SWITCH 2 #12 >> MOTOR WINDING HEATER	
C-416E	E-OL-04 E-PC-02 E-CS-02	0.75"	6	#14	XHHW-2	1	#14	XHHW-2	FR: BACKWASH PUMP 2 CONTROL STATION JB TO: BACKWASH PUMP2 CHECK VALVE 2 #14 >> CHECK VALVE SOLENOIDE 2 #14 >> CHECK VALVE OPENED 2 #14 >> CHECK VALVE CLOSED	
C-417	E-PC-01 E-PC-03 E-CS-02 E-CS-02	1.5"	24	#14	XHHW-2	1	#14	XHHW-2	FR: ELECTRICAL ROOM, PB-S1 TO: EXISTING PLC-2 AT FILTER CTL. ROOM; PB-S1 12 #14 >> BACKWASH VFD 1 DISCRETE CTLS. 12 #14 >> BACKWASH VFD 2 DISCRETE CTLS.	
S-417	E-PC-01 E-PC-03 E-CS-02	1.5"	4	2/C-#16S	9342	1	#14	XHHW-2	FR: ELECTRICAL ROOM, PB-S1 TO: EXISTING PLC-2 AT FILTER CTL. ROOM; PB-S1 1 2/C-#16S >> BACKWASH VFD 1 SPEED CONTROL 1 2/C-#16S >> BACKWASH VFD 1 SPEED FEEDBK 1 2/C-#16S >> BACKWASH VFD 2 SPEED CONTROL 1 2/C-#16S >> BACKWASH VFD 2 SPEED FEEDBK	
P420	EPC-01 E-PG04	1"	10	#12	XHHW-2	1	#12	XHHW-2	FR: PANELBOARD LP "14LL40" TO: PULL BOX PB-P6 2 #12 >> SUMP PUMP 1 CKT 2 #12 >> TRANSMITTER AIT-493 2 #12 >> FILTER'S CLEAR WELL LUMINAIRES 2 #12 >> FILTER'S CLEAR WELL RECEPTACLE 2 #12 >> SPARE WIRES VERIFY EXISTING WIRING SIZE AND UPDATE AS-BUILT DWGS	
P421	EPC-01 E-PG04	1"	10	#12	XHHW-2	1	#12	XHHW-2	FR: PANELBOARD LP "14LL40" TO: PULL BOX PB-P6 2 #12 >> SUMP PUMP 2 CKT 2 #12 >> TRANSMITTER AIT-494 2 #12 >> FILTER'S CLEAR WELL LUMINAIRES 2 #12 >> FILTER'S CLEAR WELL RECEPTACLE 2 #12 >> SPARE WIRES VERIFY EXISTING WIRING SIZE AND UPDATE AS-BUILT DWGS	
S-430	E-OL-04 E-PC-02	1"	1	CAT6	121872A				FR: SWITCHBOARD 14SB-1 (METER DMP) TO: EXIST SCADA PANEL PLC-3 1 CAT6 >> SPECIAL ETHERNET CABLE	

LAST SAVED BY: jnewberry

REV	DATE	BY	DESCRIPTION
0	SEP - 2014	JB	ISSUED FOR BID

DESIGNED MAG
DRAWN JB
CHECKED CA
DATE SEPTEMBER, 2014
PROJECT ENGINEER

Gamboa Engineers
17433 SW 65 CT
SOUTHWEST RANCHES, FL 33331
TEL. (954)-533-1121

carollo
3440 HOLLYWOOD BOULEVARD, SUITE 465
HOLLYWOOD, FLORIDA 33021
TEL: (954) 837-0030 - FAX: (954) 837-0035

pompano beach
Florida's Warmest Welcome

CITY OF POMPANO BEACH
WTP ELECTRICAL PHASE II IMPROVEMENTS
HIGH SERVICE PUMP 1-4 BUILDING
ELECTRICAL
CONDUIT SCHEDULE III

VERIFY SCALES
BAR IS ONE INCH ON ORIGINAL DRAWING
0 1"
IF NOT ONE INCH ON THIS SHEET, ADJUST SCALES ACCORDINGLY

JOB NO. 8683D.10 (II)
DRAWING NO. E-CW-03
SHEET NO. 41 OF 53

PROJECT NO. 8683D10 FILE NAME: 8683D10-E-GE-04.dgn

GENERAL INSTRUMENT OR FUNCTION SYMBOLS

A | 04-N-02 / 04-N-03 — FROM DRAWING 04-N-02 TO CONNECTION POINT A OF 04-N-03

INTERFACE EXTERNAL TO P&ID'S

XXXX — EQUIPMENT NO.

(XXX) DESIGNATIONS OF CONTROL FUNCTIONS ASSOCIATED INSTRUMENT OR OTHER COMPONENTS.

AHC	AUTO/HOLD/CLOSE	OSC	OPEN/STOP/CLOSED
A/M	AUTO/MANUAL	POT	POTENTIOMETER
DEV	DEVIATION	RL	RAISE/LOWER
HOA	HAND/OFF/AUTO	RSL	RAISE/STOP/LOWER
HOR	HAND/OFF/REMOTE	S/D	SHUTDOWN
LOS	LOCKOUT STOP	SEL	SELECT
L/R	LOCAL/REMOTE	S/LOS	START/LOCKOUT STOP
L/O/R	LOCAL/OFF/REMOTE	SP	SET POINT
MOA	MANUAL/OFF/AUTO	SR	START/RESET
O/O	ON/OFF	S/S	STOP/START
OCA	OPEN/CLOSE/AUTO		
OL	OVERLOAD		

FY * — INSTRUMENT PANEL MOUNTED WITH COMPUTING OR CONVERTING FUNCTION

CONVERT

E – VOLTAGE
I – CURRENT
P – PNEUMATIC
A – ANALOG
B – BINARY
H – HYDRAULIC
O – ELECTROMAGNETIC, SONIC
R – RESISTANCE (ELECT.)
D – DIGITAL

COMPUTE

SUMMING	Σ	AVERAGING	Σ/n
SUBTRACTOR	—	RATIO	1:1
MUTIPLYING	X	DIFFERENCE	△
DIVIDING	÷	HIGH SELECTING	>
ROOT EXTRACTION	√	LOW SELECTING	<
PROPORTIONAL	P	HIGH LIMITER	>|
DERIVITIVE	R	LOW LIMITER	<|
		INTEGRAL	I

▽ DISCRETE INPUT/OUTPUT.

▼ ANALOG INPUT/OUTPUT.

LIGHTNING SURGE ARRESTOR

(CR) INTERPOSING RELAY

IDENTIFICATION LETTERS

	FIRST–LETTER		SUCCEEDING–LETTERS		
	MEASURED OR INITIATING VARIABLE	MODIFIER	READOUT OR PASSIVE FUNCTION	OUTPUT FUNCTION	MODIFIER
A	ANALYSIS		ALARM		
B	BURNER, COMBUSTION				
C	CONDUCTIVITY			CONTROL	CLOSED
D	DENSITY	DIFFERENTIAL			
E	VOLTAGE		SENSOR (PRIMARY ELEMENT)		
F	FLOW RATE	RATIO (FRACTION)			
G	GAGE		GLASS, VIEWING DEVICE		
H	HAND				HIGH
I	CURRENT (ELECTRICAL)		INDICATE		
J	POWER	SCAN			
K	TIME, TIME SCHEDULE	TIME RATE OF CHANGE		CONTROL STATION	
L	LEVEL		LIGHT		LOW
M	MOTOR	MOMENTARY			MIDDLE, INTERMEDIATE
N	TORQUE, RUN		ISOLATE	ISOLATOR	
O			ORIFICE, RESTRICTION		OPEN
P	PRESSURE, VACUUM		POINT (TEST) CONNECTION		
Q	QUANTITY	INTEGRATE, TOTALIZE			
R	RADIATION		RECORD		
S	SPEED, FREQUENCY	SAFETY		SWITCH	
T	TEMPERATURE			TRANSMIT	
U	MULTIVARIABLE		MULTIFUNCTION	MULTIFUNCTION	MULTIFUNCTION
V	VIBRATION, MECHANICAL ANALYSIS			VALVE, DAMPER, LOUVER	
W	WEIGHT, FORCE		WELL		
X	INTRUSION, FAILURE	X AXIS			
Y	EVENT, STATE OR PRESENCE, REMOTE	Y AXIS		COMPUTE, CONVERT	
Z	POSITION, DIMENSION	Z AXIS		DRIVER, ACTUATOR, FINAL CONTROL ELEMENT	

TAG NUMBERS

TYPICAL:
FORMAT

TIC–1	-	INSTRUMENT IDENTIFICATION OR TAG NUMBER
TIC	-	FUNCTIONAL IDENTIFICATION
T	-	FIRST–LETTER
IC	-	SUCCEEDING–LETTER(S)
1	-	LOOP NUMBER

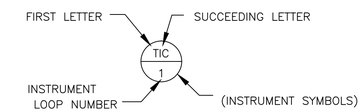

EXPANDED:
FORMAT

10–PAH–1A	—	TAG NUMBER
A	—	OPTIONAL SUFFIX

SAMPLE LOOP DIAGRAM ISA EXPANDED FORMAT

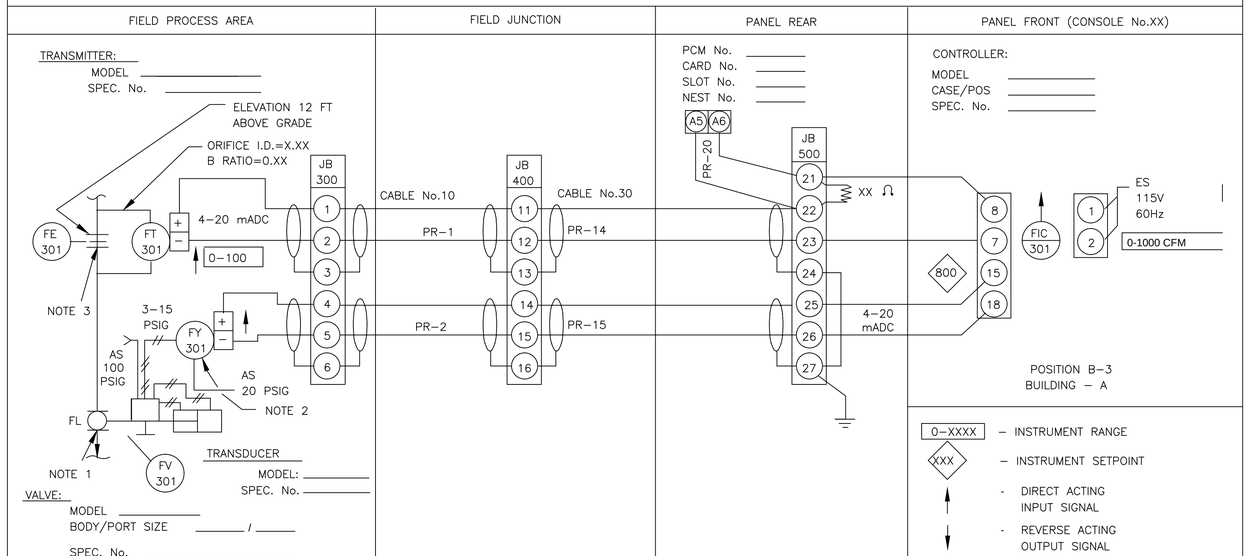

NOTES:
1. FV–301 FULLY OPEN AT 3 PSIG AND FULLY CLOSED AT 15 PSIG.
2. STAND MOUNT PER INSTRUMENT STANDARD XXXX NEAR, BUT NOT ON THE CONTROL VALVE.
3. FE–301 REQUIRES 10 PIPE DIAMETERS UPSTREAM AND 5 PIPE DIAMETERS DOWNSTREAM OF STRAIGHT PIPE.

REV	DATE	BY	DESCRIPTION
0	SEP - 2014	JB	ISSUED FOR BID

DESIGNED MAG
DRAWN JB
CHECKED CA
DATE SEPTEMBER, 2014
PROJECT ENGINEER

Gamboa Engineers
17433 SW 65 CT
SOUTHWEST RANCHES, FL 33331
TEL. (954)-533-1121

carollo
3440 HOLLYWOOD BOULEVARD, SUITE 465
HOLLYWOOD, FLORIDA 33021
TEL: (954) 837-0030 - FAX: (954) 837-0035

pompano beach
Florida's Warmest Welcome

CITY OF POMPANO BEACH
WTP ELECTRICAL PHASE II IMPROVEMENTS
HIGH SERVICE PUMP 1-4 BUILDING
INSTRUMENTATION
P&ID LEGEND - I

VERIFY SCALES
BAR IS ONE INCH ON ORIGINAL DRAWING
0 — 1"
IF NOT ONE INCH ON THIS SHEET, ADJUST SCALES ACCORDINGLY

JOB NO. 8683D.10 (II)
DRAWING NO. N-01
SHEET NO. 42 OF 53

LAST SAVED BY: jbuitrago
PROJECT NO. 8683D10 FILE NAME: 8683D10-E-CS-02.dgn

VALVE AND PIPING SYMBOLS

- GLOBE VALVE
- GATE VALVE
- BUTTERFLY VALVE
- CHECK VALVE – SWING
- CHECK VALVE – FLAPPER
- PLUG VALVE
- 3–WAY VALVE
- ANGLE VALVE
- RELIEF OR SAFETY VALVE
- DIAPHRAGM VALVE
- BALL VALVE
- PRESSURE REGULATING VALVE
- KNIFE GATE VALVE
- BACKFLOW PREVENTER
- FLEXIBLE HOSE
- ROTAMETER
- DRYER
- HEAT EXCHANGE
- LUBRICATOR
- FILTER
- FLUSHING PORT
- POLYMER INJECTION PORT W/ REDUCERS
- BASKET TYPE STRAINER
- Y–TYPE STRAINER
- DUPLEX STRAINER
- SLEEVE COUPLING (SC)
- FLOOR DRAIN
- EQUIPMENT DRAIN
- CLEANOUT (CO)
- REMOVABLE PLUG
- REMOVABLE CAP
- BLIND FLANGE
- EXHAUST TO ATMOSPHERE (INSIDE)
- EXHAUST TO ATMOSPHERE (OUTSIDE)
- REDUCER
- UNION
- QUICK DISCONNECT COUPLING
- GAUGE SEAL
- SILENCER
- EXPANSION JOINT
- AIR RELIEF VALVE
- PULSATION DAMPENER

VALVE OPERATOR SYMBOLS

- SOLENOID
- MOTOR, ELECTRIC
- DIAPHRAGM
- DIAPHRAGM WITH POSITIONER
- HANDWHEEL OR LEVER
- CHAINWHEEL

PRIMARY ELEMENT SYMBOLS - FLOW

- ORIFICE PLATE
- PILOT TUBE
- VENTURI TUBE FLOW METER
- TOTALIZING FLOWMETER
- CALIBRATION TUBE
- FLUME
- WEIR
- TURBINE OR PROPELLER TYPE METER
- MAGNETIC FLOW METER
- STATIC MIXER
- SLIDE GATE
- PROBE
- FLOAT SWITCH
- LEVEL RADAR

EQUIPMENT SYMBOLS

- CENTRIFUGAL PUMP
- PNEUMATIC PUMP
- SCREW CONVEYOR
- METERING PUMP
- PISTON PUMP
- BLOWER
- KNOCKOUT TANK
- AIR COMPRESSOR (AC)
- MIXER
- PROGRESSIVE CAVITY PUMP
- SUBMERSIBLE PUMP

GENERAL INSTRUMENT SYMBOLS

ONE VARIABLE	TWO VARIABLES	
		FIELD MOUNTED
		PANEL MOUNTED
		INTERLOCK
		PROGRAMMABLE LOGIC CONTROLLER (PLC)
		HUMAN MACHINE INTERFACE (HMI)
		DIGITAL INPUT
		DIGITAL OUTPUT
		ANALOG INPUT
		ANALOG OUTPUT

LINE SYMBOLS

- WATER STREAMS
- SOLIDS STREAMS
- SECONDARY WATER STREAMS
- PNEUMATIC SIGNAL / COMPRESSED AIR LINE
- CHEMICAL FEED LINE
- ELECTRIC SIGNAL
- CAPILLARY TUBING (FILLED SYSTEM)
- HYDRAULIC SIGNAL
- ELECTROMAGNETIC OR SONIC SIGNAL NO WIRING OR TUBING

PROCESS LINE ABBREVIATIONS

AIR	AIR, ATMOSPHERIC PRESSURE
BW	BACKWASH
CA	COMPRESSED AIR
CCA	CHLORINE CONTAMINATED AIR
CGW	CONTAMINATED GROUNDWATER
D	DRAIN
EFF	EFFLUENT
EXH	EXHAUST
FLT	FILTRATE
FTW	FILTER–TO–WASTE
NPW	NON–POTABLE WATER
OZE	OZONE GAS
P	PRODUCT
PW	POTABLE WATER
RW	RAW WATER
S	SANITARY
SL	SLUDGE
SN	SUPERNATANT
SP	SAMPLE PORT
SS	STORM SEWER
TF	TOTAL FLUIDS
TW	TREATED WATER
V	VENT
VAP	VAPOR

PIPING MATERIAL IDENTIFICATION

CPVC	CHLORINATED POLYVINYL CHLORIDE
CSP	CARBON STEEL PIPE
COP	COPPER
CMP	CORRUGATED METAL PIPE
CIP	CAST IRON PIPE
DIP	DUCTILE IRON PIPE
FRP	FIBERGLASS REINFORCED PIPE
GSP	GALVANIZED STEEL PIPE
HDPE	HIGH DESITY POLYETHYLENE PIPE
PE	POLYETHYLENE PIPE
PP	POLYPROPYLENE PIPE
PVC	POLYVINYL CHLORIDE PIPE
RCP	REINFORCED CONCRETE PIPE
RUB	RUBBER
SS	STAINLESS STEEL PIPE
VCP	VITRIFIED CLAY PIPE

EQUIPMENT NOTATION ABBREVIATIONS

AC	AIR COMPRESSOR
AN	ANNUBAR
ARV	AIR RELIEF VALVE
B	BLOWER
BFP	BELT FILTER PRESS
BP	BOOSTER PUMP
BPD	BACKFLOW PREVENTION DEVICE
C	CATALYST
CC	CALIBRATION COLUMN
CH	CHLORINATOR
CV	CHECK VALVE
D	DIFFUSERS
FC	FILTER CELL
FE	FLOW ELEMENT, ORIFICE PLATE
FM	FLOW METER
FO	RESTRICTION ORIFICE TO CUT PRESSURE
FV	FLOW VALVE
GC	GRIT CLASSIFIER
GT	GRAVITY THICKENER
H	HYDROCYCLONE
HP	HOPPER
HV	HAND VALVE
IN	INJECTOR
L	LAUNDER
MX	MIXER
P	PUMP
PCV	PRESSURE CONTROL VALVE
PD	PULSATION DAMPENER
RM	ROTOMETER
S	STORAGE
SC	SCALE
SIL	SILENCER
SM	STATIC MIXER
SP	SAMPLE PUMP
SV	SOLENOID VALVE
SW	STILLING WELL
T	TANK
V	VIBRATOR
VR	AUTOMATIC SWITCHOVER VACUUM REGULATOR W/ TRAP & FILTER
WP	ADJUSTABLE WEIR PLATE
WW	WETWELL

FUNCTION ABBREVIATIONS

<	LOW SELECT
>	HIGH SELECT
A	ANALOG
ALT	ALTERNATE
BFC	BALLASTED FLOCCULATION / CLARIFICATION
BRG	BEARING
CL_2	CHLORINE RESIDUAL
CS	CONTROL STATION
D	DIGITAL
DO	DISSOLVED OXYGEN
dP	DIFFERENTIAL PRESSURE
f	INTERNAL INDICATOR
FC	FAIL CLOSED
ES	EMERGENCY SHUTDOWN
FI	FAIL INDETERMINATE
FL	FAIL LOCKED
FO	FAIL OPEN
HMI	HUMAN MACHINE INTERFACE
I/I	CURRENT-TO-CURRENT
I/P	CURRENT-TO-PNEUMATIC
L	LENGTH
LCP	LOCAL CONTROL PANEL
LEL	LOWER EXPLOSIVE LIMIT
NC	NORMALLY CLOSED
NO	NORMALLY OPEN
O_3	OZONE GAS
OAC	OPEN-AUTO-CLOSE
OC	OPEN-CLOSE
ORP	OXIDATION REDUCTION POTENTIAL
TURB	TURBIDITY
UCP	UNIT CONTROL PANEL
VGAC	VAPOR-PHASE GRANULAR ACTIVATED CARBON
WDG	WINDING

REV	DATE	BY	DESCRIPTION
0	SEP - 2014	JB	ISSUED FOR BID

DESIGNED MAG
DRAWN JB
CHECKED CA
DATE SEPTEMBER, 2014
PROJECT ENGINEER

Gamboa Engineers
17433 SW 65 CT
SOUTHWEST RANCHES, FL 33331
TEL. (954)-533-1121

carollo
3440 HOLLYWOOD BOULEVARD, SUITE 465
HOLLYWOOD, FLORIDA 33021
TEL: (954) 837-0030 - FAX: (954) 837-0035

pompano beach
Florida's Warmest Welcome

CITY OF POMPANO BEACH
WTP ELECTRICAL PHASE II IMPROVEMENTS
HIGH SERVICE PUMP 1-4 BUILDING
INSTRUMENTATION
P&ID LEGEND - II

VERIFY SCALES
BAR IS ONE INCH ON ORIGINAL DRAWING
0 1"
IF NOT ONE INCH ON THIS SHEET, ADJUST SCALES ACCORDINGLY

JOB NO. 8683D.10 (II)
DRAWING NO. N-02
SHEET NO. 43 OF 53

LAST SAVED BY: jbuitrago
PROJECT NO. 8683D10 FILE NAME: 8683D10-E-CS-02.dgn

A E-SP-01 EXISTING PLC-2 CABINET 3 4
SCALE: NTS
FILE: -

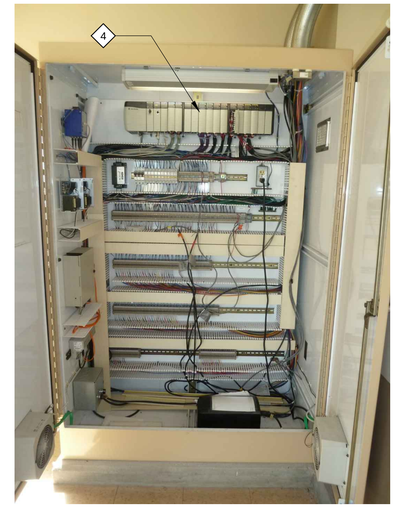

B E-SP-01 EXISTING PLC-2 CABINET (INTERIOR) 3 4
SCALE: NTS
FILE: -

C E-SP-01 EXISTING PLC-3 CABINET 1 2
SCALE: NTS
FILE: -

D E-SP-01 EXISTING PLC-3 CABINET (INTERIOR) 1 2
SCALE: NTS
FILE: -

KEY NOTES:

1. TERMINATE NEW FIELD WIRING ASSOCIATED WITH ELECTRIC METERS AT SWITCHBOARD "14-SB1" AND EXTEND FROM TERMINAL BLOCKS TO APPLICABLE I/O MODULES.
2. UTILIZE SPARE I/O MODULES OR PROVIDE ADDITIONAL HARDWARE AS NECESSARY FOR MONITORING SWB-14SB1.
3. TERMINATE NEW FIELD WIRING ASSOCIATED WITH BACK WASH PUMPS No. 1 & No. 2 AND EXTEND FROM TERMINAL BLOCKS TO APPLICABLE I/O MODULES.
4. UTILIZE SPARE I/O MODULES OR PROVIDE ADDITIONAL HARDWARE AS NECESSARY FOR CONTROL AND MONITORING OF BACK WASH PUMPS No. 1 & No 2.

REV	DATE	BY	DESCRIPTION
0	SEP - 2014	JB	ISSUED FOR BID

DESIGNED MAG
DRAWN JB
CHECKED CA
DATE SEPTEMBER, 2014
PROJECT ENGINEER

Gamboa Engineers
17433 SW 65 CT
SOUTHWEST RANCHES, FL 33331
TEL. (954)-533-1121

carollo
3440 HOLLYWOOD BOULEVARD, SUITE 465
HOLLYWOOD, FLORIDA 33021
TEL: (954) 837-0030 - FAX: (954) 837-0035

pompano beach
Florida's Warmest Welcome

CITY OF POMPANO BEACH
WTP ELECTRICAL PHASE II IMPROVEMENTS
HIGH SERVICE PUMP 1-4 BUILDING
INSTRUMENTATION
EXISTING PLC CABINETS WIRING ADDITIONS

VERIFY SCALES
BAR IS ONE INCH ON ORIGINAL DRAWING
0 1"
IF NOT ONE INCH ON THIS SHEET, ADJUST SCALES ACCORDINGLY

JOB NO. 8683D.10 (II)
DRAWING NO. N-03
SHEET NO. 44 OF 53

LAST SAVED BY: jbuitrago
PROJECT NO. 8683D10 FILE NAME: 8683D10-E-CS-02.dgn

NOTES:

1. ALL EQUIPMENT AND INSTRUMENT TAGS ON THIS DRAWING HAVE PREFIX.
2. LOCAL LOCK-OUT STOP BUTTON SHALL BE PUSHED PULL TYPE.

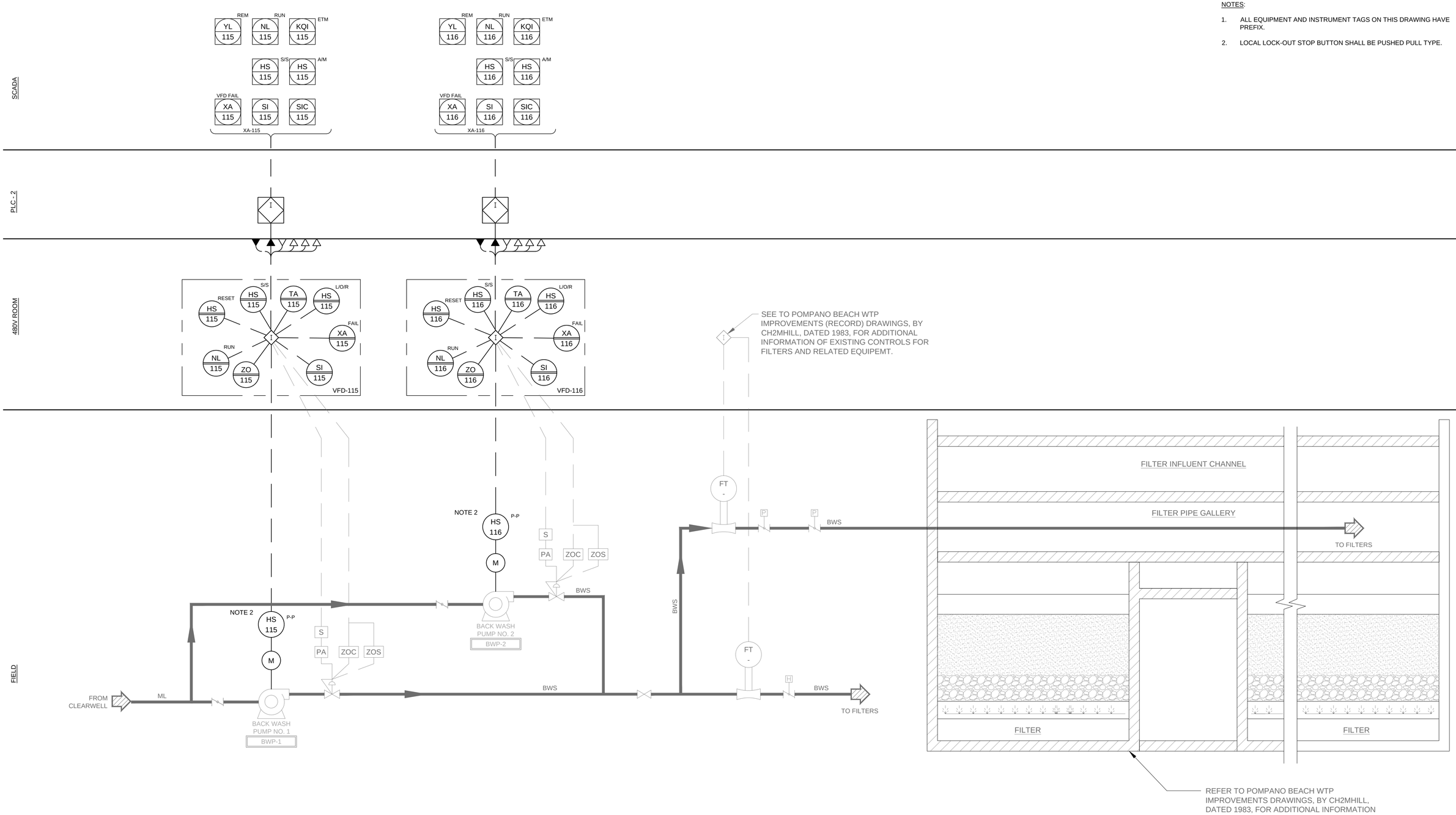

REV	DATE	BY	DESCRIPTION
0	SEP - 2014	JB	ISSUED FOR BID

DESIGNED MAG
DRAWN JB
CHECKED CA
DATE SEPTEMBER, 2014
PROJECT ENGINEER

Gamboa Engineers
17433 SW 65 CT
SOUTHWEST RANCHES, FL 33331
TEL. (954)-533-1121

carollo
3440 HOLLYWOOD BOULEVARD, SUITE 465
HOLLYWOOD, FLORIDA 33021
TEL: (954) 837-0030 - FAX: (954) 837-0035

pompano beach
Florida's Warmest Welcome

CITY OF POMPANO BEACH
WTP ELECTRICAL PHASE II IMPROVEMENTS
HIGH SERVICE PUMP 1-4 BUILDING
INSTRUMENTATION
BACK WASH PUMPS No. 1 & No. 2 - P&ID

VERIFY SCALES
BAR IS ONE INCH ON ORIGINAL DRAWING
0 1"
IF NOT ONE INCH ON THIS SHEET, ADJUST SCALES ACCORDINGLY

JOB NO. 8683D.10 (II)
DRAWING NO. N-04
SHEET NO. 45 OF 53

LAST SAVED BY: jbuitrago
PROJECT NO. 8683D10
FILE NAME: 8683D10-E-CS-02.dgn

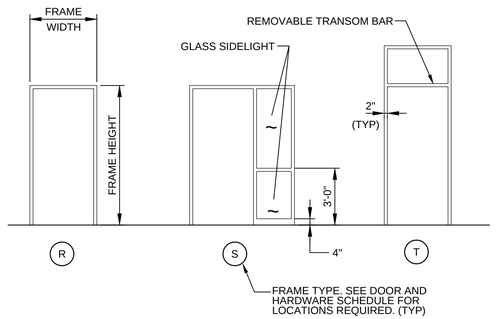

NOTES:

1. SEE DOOR AND HARDWARE SCHEDULE FOR FRAME SIZE, MATERIAL, AND DETAILS.
2. SIDELIGHT MAY BE ON EITHER SIDE OF DOOR. SEE DRAWINGS FOR REQUIRED SIDELIGHT LOCATION.
3. GLASS AT SIDELIGHTS SHALL BE TEMPERED.
4. GLASS AT INTERIOR SIDELIGHTS SHALL BE CLEAR. GLASS AT EXTERIOR SIDELIGHTS SHALL BE TINTED INSULATING GLASS.

A104 TYP — DOOR FRAME TYPES

08/01/05

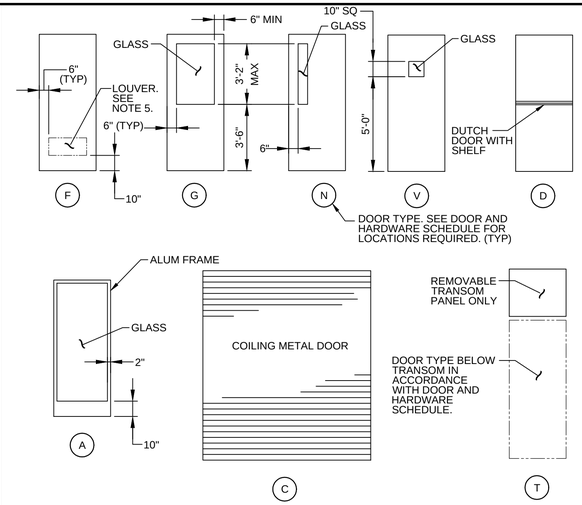

NOTES:

1. DOOR SIZE AND TYPE SHALL BE IN ACCORDANCE WITH DOOR AND HARDWARE SCHEDULE.
2. GLASS AT DOORS SHALL BE TEMPERED UNLESS OTHERWISE INDICATED ON THE DRAWINGS.
3. GLASS AT INTERIOR DOORS SHALL BE CLEAR. GLASS AT EXTERIOR DOORS SHALL BE TINTED.
4. PROVIDE WIRE GLASS AT LABELED DOORS.
5. LOUVER MAY BE REQD AT ANY DOOR TYPE. SEE DOOR AND HARDWARE SCHEDULE FOR SIZE AND REQUIRED LOCATION.
6. PROVIDE LABELED DOORS IN ACCORDANCE WITH DOOR AND HARDWARE SCHEDULE.

A105 TYP — DOOR TYPES

08/01/05

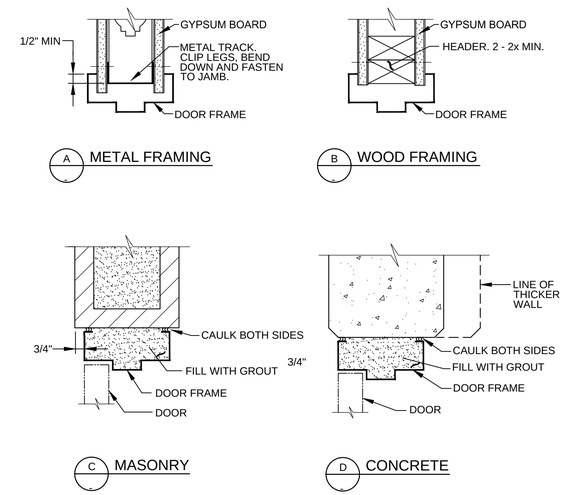

A112 TYP — DOOR HEAD DETAILS

SHEET 1 OF 2

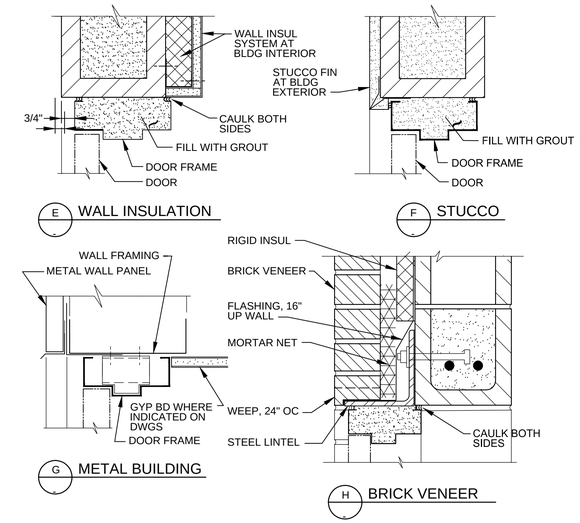

NOTE:

1. DOOR AND FRAME SIZE AND MATERIAL SHALL BE IN ACCORDANCE WITH DOOR AND HARDWARE SCHEDULE.
2. FRAME DIMENSIONS SHALL MATCH THOSE OF JAMB DETAILS ON A120 TYP.
3. SEE SPEC FOR WALL INSULATION SYSTEM DETAILS.

A112 TYP — DOOR HEAD DETAILS

SHEET 2 OF2 08/01/05

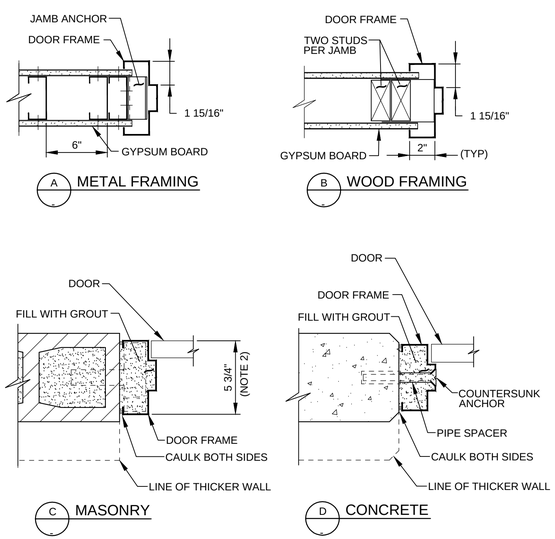

A120 TYP — DOOR JAMB DETAILS

SHEET 1 OF 2

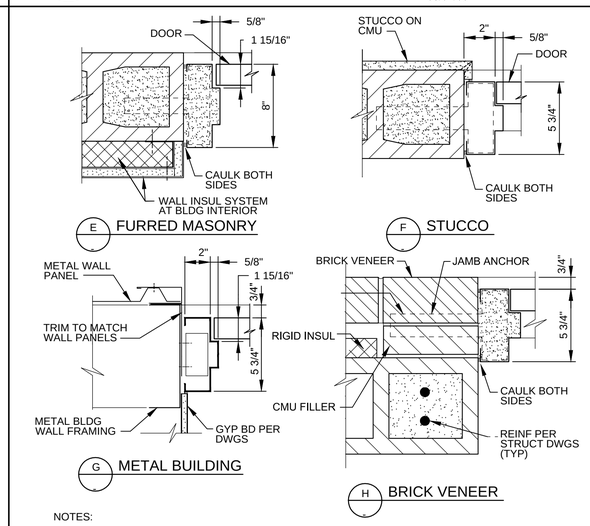

NOTES:

1. DOOR AND FRAME SIZE AND MATERIAL SHALL BE IN ACCORDANCE WITH DOOR AND HARDWARE SCHEDULE.
2. PROVIDE 2" FRAME WIDTH, 5 3/4" FRAME DEPTH AND 1/2" BACKBEND TYPICAL UNLESS OTHERWISE SHOWN OR SCHEDULED.
3. PROVIDE MINIMUM 3 ANCHORS PER JAMB AT MASONRY AND 4 ANCHORS PER JAMB AT STUD OR CONCRETE CONSTRUCTION. FILL FRAMES IN MASONRY WITH GROUT.

A120 TYP — DOOR JAMB DETAILS

SHEET 2 OF 2 08/01/05

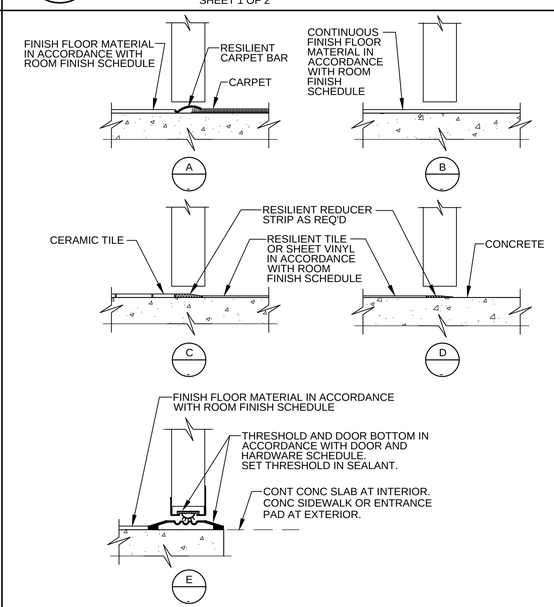

NOTE:

1. DOOR CLEARANCE AT BOTTOM OF DOOR SHALL BE 1/4" MIN AND 3/8" MAX.

A122 TYP — DOOR SILL DETAILS

08/01/05

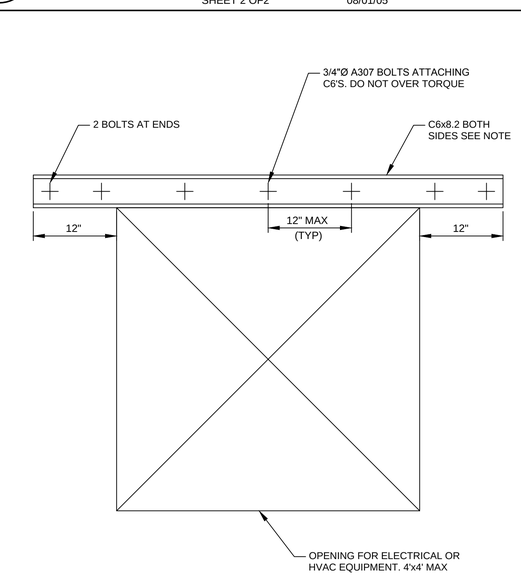

NOTE:

1. INSTALL C6'S BEFORE CUTTING OPENING. DO NOT INSTALL LESS THAN 24" IN ANY DIRECTION FROM AN EXISTING OPENING

A S-HSP-02 — NEW OPENING DETAIL IN CMU WALL

SCALE:
FILE:

REV	DATE	BY	DESCRIPTION
0	SEP - 2014	JB	ISSUED FOR BID

DESIGNED JSD
DRAWN JB
CHECKED
DATE SEPTEMBER, 2014
PROJECT ENGINEER

carollo
3440 HOLLYWOOD BOULEVARD, SUITE 465
HOLLYWOOD, FLORIDA 33021
TEL: (954) 837-0030 - FAX: (954) 837-0035

pompano beach
Florida's Warmest Welcome

CITY OF POMPANO BEACH
WTP ELECTRICAL PHASE II IMPROVEMENTS
HIGH SERVICE PUMP 1-4 BUILDING
ARCHITECTURAL
TYPICAL DETAILS

VERIFY SCALES
BAR IS ONE INCH ON ORIGINAL DRAWING
0 1"
IF NOT ONE INCH ON THIS SHEET, ADJUST SCALES ACCORDINGLY

JOB NO. 8683D.10 (II)
DRAWING NO. T-00-T1
SHEET NO. 46 OF 53

LAST SAVED BY: ccabrera
PROJECT NO. 8683D10 FILE NAME: 8683D10-T-00-T1.dgn

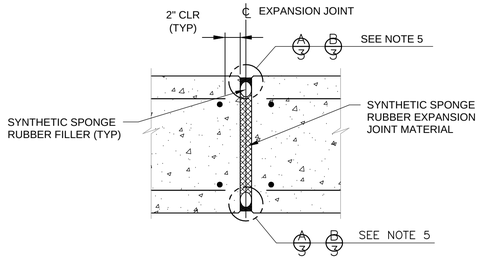

NON–WATER BEARING SLAB OR WALL

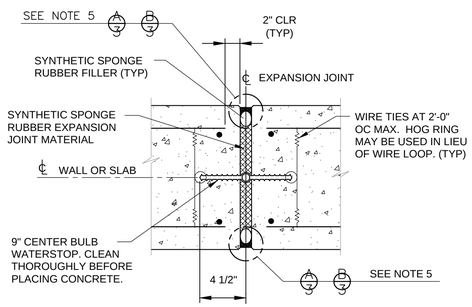

WATER BEARING SLAB OR WALL

S130 TYP — EXPANSION JOINT

SHEET 1 OF 2

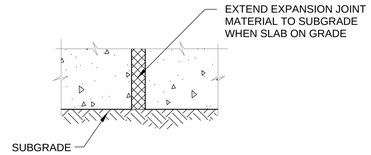

DETAIL - SLAB ON GRADE

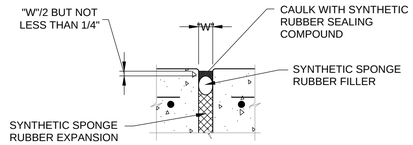

DETAIL

NOTES:

1. FOR WALLS, FORM ALL JOINT EDGES AT 1/4" CHAMFER.
2. FOR SLABS, EDGE TOP OF EXPOSED SLAB JOINT EDGES AT 1/4" RADIUS.
3. FOR UNDERSIDE OF EXPOSED SLABS, FORM JOINT EDGES AT 1/4" CHAMFER.
4. "W" = 1" THICK UNLESS OTHERWISE INDICATED ON THE DRAWINGS. MIN JOINT WIDTH = 3/8".
5. USE AT UNDERSIDE OF SLABS ON GRADE ONLY. USE AT ALL OTHER LOCATIONS.

S130 TYP — EXPANSION JOINT

SHEET 2 OF 2

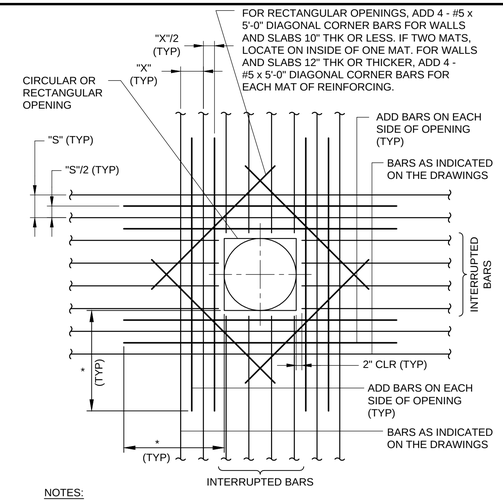

NOTES:

1. AREA OF ADD BARS AT EACH EDGE OF OPENING IN EACH DIRECTION SHALL MATCH 1/2 THE CROSS SECTIONAL AREA OF THE INTERRUPTED BARS.
2. PROVIDE STANDARD ACI HOOKS ON BARS IF STRAIGHT EXTENSION, PAST THE OPENING, CANNOT BE ACHIEVED.
3. PLACE ADD BARS IN SAME PLANES AS INTERRUPTED REINFORCING.
4. PLACE #5 DIAGONAL BARS UNDER INTERRUPTED REINFORCING.
5. * - DIMENSION EQUALS OPENING DIMENSION MEASURED PERPENDICULAR TO ADD BARS PLUS LAP SPLICE LENGTH.

S180 TYP — ADDITIONAL REINFORCING AT OPENINGS IN CONCRETE SLABS OR WALLS

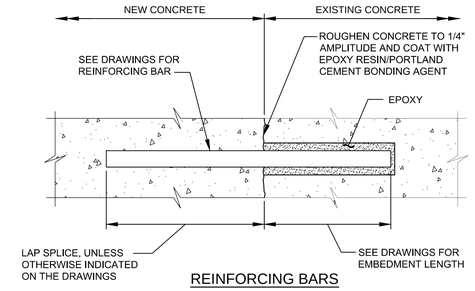

REINFORCING BARS

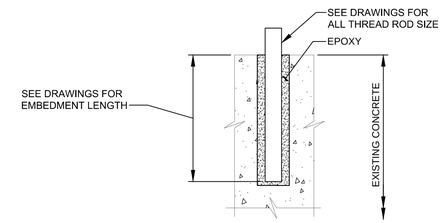

ALL-THREAD RODS

NOTE:

1. INSTALLATION OF REINFORCING BARS AND ALL THREAD RODS AS INDICATED IN THE SPECIFICATIONS.

S194 TYP — EPOXY BONDED REINFORCING BARS OR ALL THREAD RODS

N 04/30/07

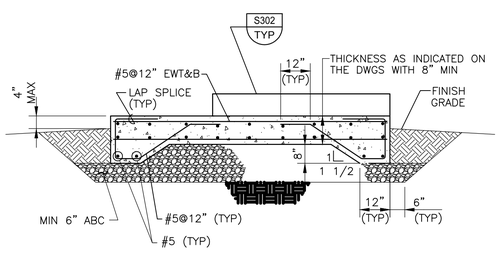

NOTE:

1. DIM AS REQD TO SUIT EQUIPMENT OR AS INDICATED ON THE DRAWINGS.

S300 TYP — EQUIPMENT SLAB

R 07–24–14

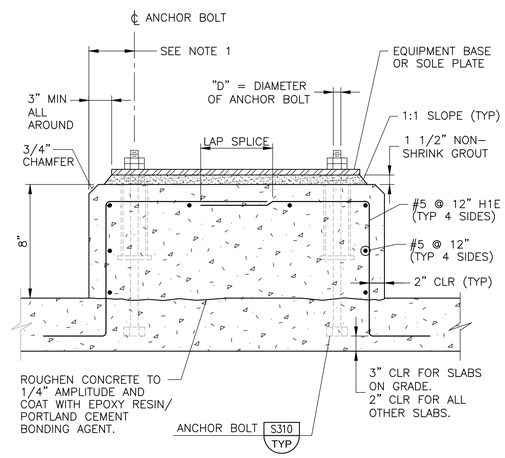

NOTES:

1. THE EDGE DISTANCE ON THE ANCHOR BOLTS SHALL NOT BE LESS THAN 6" OR 8 x "D".
2. WHERE CONCRETE SLAB OR BEAM THICKNESS WILL NOT ACCOMMODATE THE ANCHOR BOLT, PROVIDE EXTRA THICKNESS OR SLAB OR BEAM.

S302 TYP — EQUIPMENT BASE

R

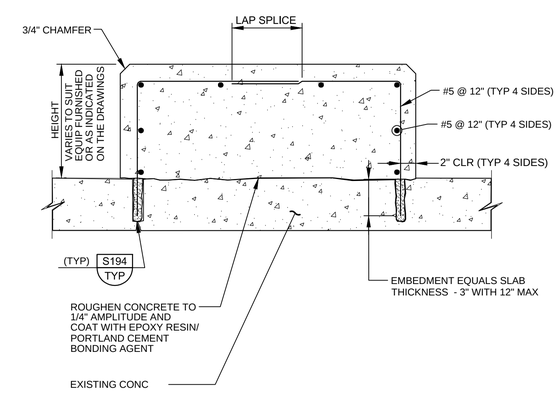

NOTE:

1. "D" = DIAMETER OF ANCHOR BOLT.

S304 TYP — EQUIPMENT BASE ON EXISTING CONCRETE SLAB

N 07/31/08

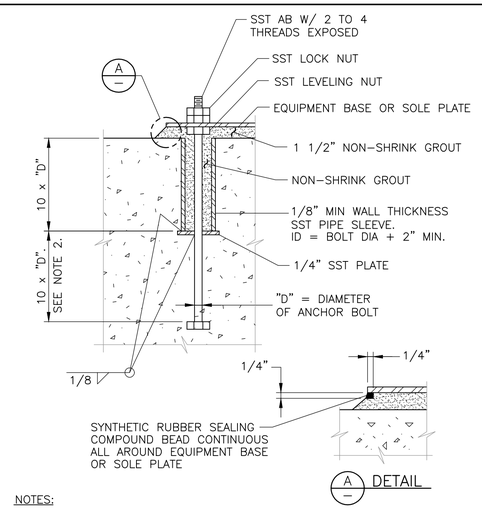

NOTES:

1. ANCHOR BOLT DIAMETER AS INDICATED ON THE DRAWINGS. IF NOT INDICATED ON THE DRAWINGS, THE ANCHOR BOLT SIZE SHALL BE AS RECOMMENDED BY THE EQUIPMENT MANUFACTURER.
2. WHERE CONCRETE SLAB OR BEAM THICKNESS WILL NOT ACCOMMODATE THE ANCHOR BOLT, PROVIDE EXTRA THICKNESS OF SLAB OR BEAM.
3. PREFABRICATED PLASTIC ANCHOR BOLT SLEEVE OPTIONAL.
4. DO NOT USE ALL THREAD RODS AS A SUBSTITUTE FOR BOLTS WITH A BOLT HEAD. SMOOTH RODS THREADED AT THE ENDS MAY BE USED IF ACCEPTABLE TO THE ENGINEER. DO NOT WELD NUTS TO THE THREADED RODS.

S310 TYP — ANCHOR BOLT

N 07–31–08

LAST SAVED BY: jnewberry

REV	DATE	BY	DESCRIPTION
0	SEP - 2014	JB	ISSUED FOR BID

DESIGNED JDS
DRAWN JB
CHECKED
DATE SEPTEMBER, 2014
PROJECT ENGINEER

carollo®
3440 HOLLYWOOD BOULEVARD, SUITE 465
HOLLYWOOD, FLORIDA 33021
TEL: (954) 837-0030 - FAX: (954) 837-0035

pompano beach
Florida's Warmest Welcome

CITY OF POMPANO BEACH
WTP ELECTRICAL PHASE II IMPROVEMENTS
HIGH SERVICE PUMP 1-4 BUILDING
STRUCTURAL
TYPICAL DETAILS

VERIFY SCALES
BAR IS ONE INCH ON ORIGINAL DRAWING
0 1"
IF NOT ONE INCH ON THIS SHEET, ADJUST SCALES ACCORDINGLY

JOB NO. 8683D.10 (II)
DRAWING NO. T-00-T2
SHEET NO. 47 OF 53

PROJECT NO. 8683D10 FILE NAME: 8683D10-T-00-T2.dgn

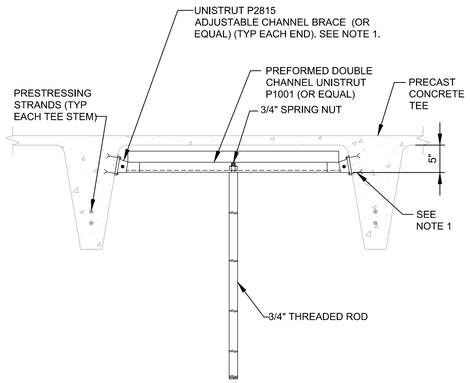

NOTE:

1. FASTEN ADJUSTABLE CHANNEL BRACES TO TEE USING 1/2"Ø x 4" MIN EMBED CONCRETE ANCHORS. FIELD LOCATE PRESTRESSING STRANDS AND OTHER TEE REINFORCEMENT BEFORE DRILLING.

S-900 TYP R — HVAC AIR HANDLER, HVAC DUCT & ELECTRICAL TRAPEZE SUPPORT DETAIL CAPACITY 300LB. DET. 1

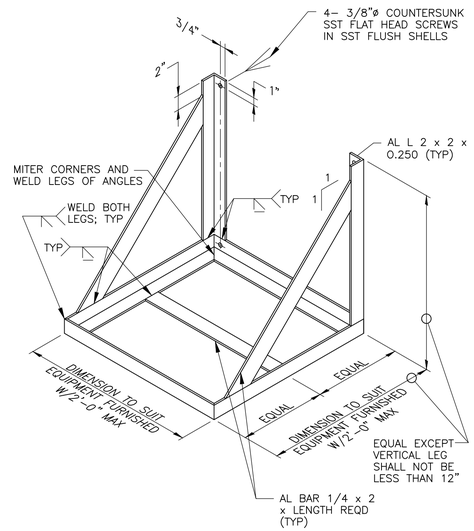

S-901 TYP R — ELECTRICAL EQUIPMENT MOUNTING BRACKET

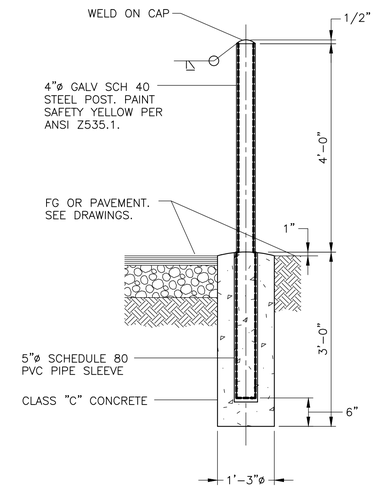

NOTE:

1. PROVIDE 3/8" EJ MATERIAL WHERE INSTALLED IN CONC PAVING.

C161 TYP N — REMOVABLE GUARD POST 08-01-05

NOTE:
MODIFY SUPPORT PER S-900 TYP WHEN APPLICABLE

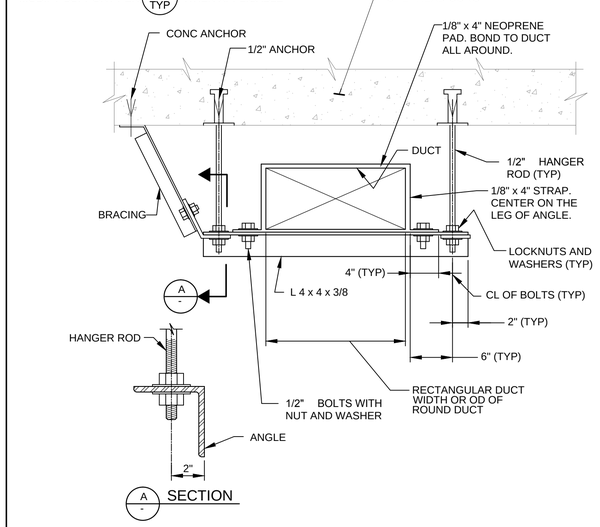

NOTES:

1. ALL METAL SHALL BE HOT-DIP GALV STEEL UNLESS OTHERWISE INDICATED ON THE DWGS.
2. SEE DRAWINGS FOR THE SIZE OF DUCT.
3. TO APPLY TO ALL RECTANGULAR DUCTS & ALL ROUND DUCTS 18" AND LARGER.

H124 TYP R — RECTANGULAR DUCT SUPPORT - TRAPEZE FROM SLAB ABOVE 11/10/11

REV	DATE	BY	DESCRIPTION
0	SEP - 2014	JB	ISSUED FOR BID

DESIGNED MAG
DRAWN JB
CHECKED CA
DATE SEPTEMBER, 2014
PROJECT ENGINEER

LAST SAVED BY: ccabrera

carollo
3440 HOLLYWOOD BOULEVARD, SUITE 465
HOLLYWOOD, FLORIDA 33021
TEL: (954) 837-0030 - FAX: (954) 837-0035

pompano beach
Florida's Warmest Welcome

CITY OF POMPANO BEACH
WTP ELECTRICAL PHASE II IMPROVEMENTS
HIGH SERVICE PUMP 1-4 BUILDING
STRUCTURAL
TYPICAL DETAILS

VERIFY SCALES
BAR IS ONE INCH ON ORIGINAL DRAWING
0 1"
IF NOT ONE INCH ON THIS SHEET, ADJUST SCALES ACCORDINGLY

JOB NO. 8683D.10 (II)
DRAWING NO. T-00-T3
SHEET NO. 48 OF 53

PROJECT NO. 8683D10 FILE NAME: 8683D10-T-00-T6.dgn

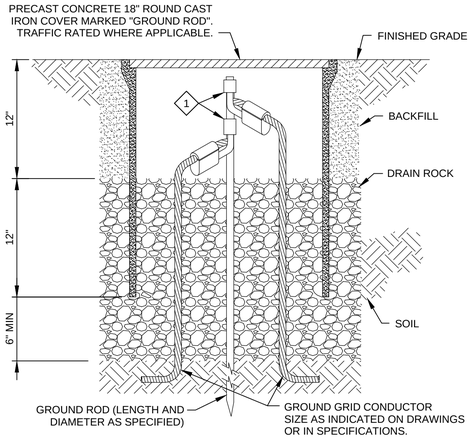

KEY NOTES:

1. GROUND ROD TO GROUND GRID CROSS CONNECTOR. SIZE FOR ROD AND CABLE PER CONNECTOR MANUFACTURERS GUIDELINES.

EG001 TYP S — GROUND ROD AND GROUNDWELL COMPRESSION CONNECTION

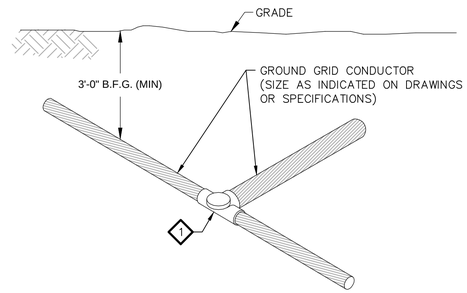

KEY NOTES:

1. HORIZONTAL TEE CONNECTION.

EG151 TYP — COPPER GROUNDING CABLE CONNECTION EXOTHERMC CONNECTION

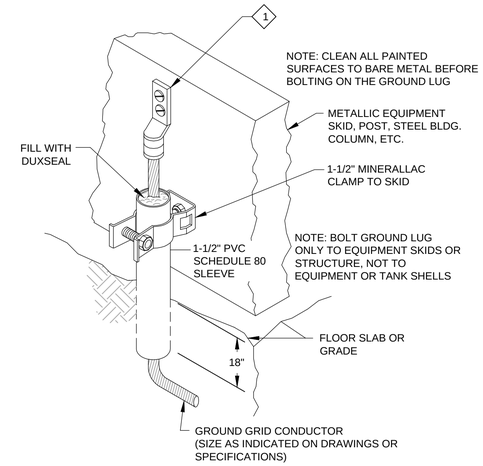

KEY NOTES:

1. HEAVY DUTY COMPRESSION TERMINAL

EG201 TYP S — EQUIPMENT SKID GROUNDING COMPRESSION CONNECTION

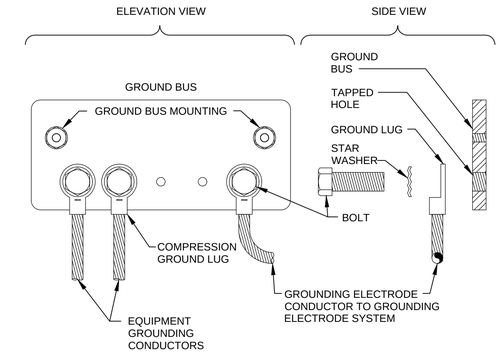

EG204 TYP S — GROUND BUS CONNECTIONS

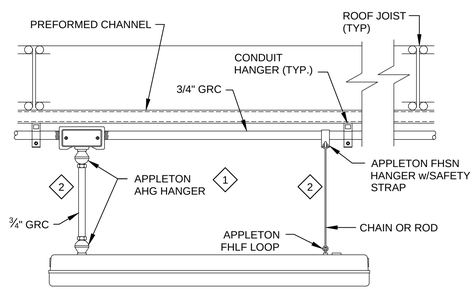

KEY NOTES:

1. USE MEYERS HUB IN WET AND/OR CORROSIVE AREAS
2. LENGTH AS REQUIRED FOR INDICATED MOUNTING HEIGHT

EL200 TYP S — FLUORESCENT LUMINAIRE MOUNTING BELOW ROOF JOISTS

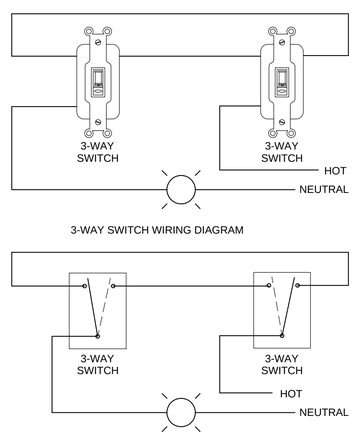

EL700 TYP R — 3-WAY SWITCH ONE-LINE DIAGRAM

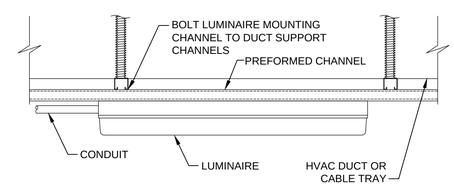

EL901 TYP R — FLUORESCENT LUMINAIRE MOUNTING BELOW HVAC DUCTS, CABLE TRAY & WIREWAY

REV	DATE	BY	DESCRIPTION
0	SEP - 2014	JB	ISSUED FOR BID

DESIGNED MAG
DRAWN JB
CHECKED CA
DATE SEPTEMBER, 2014
PROJECT ENGINEER

LAST SAVED BY: ccabrera

Gamboa Engineers
17433 SW 65 CT
SOUTHWEST RANCHES, FL 33331
TEL. (954)-533-1121

carollo
3440 HOLLYWOOD BOULEVARD, SUITE 465
HOLLYWOOD, FLORIDA 33021
TEL: (954) 837-0030 - FAX: (954) 837-0035

pompano beach
Florida's Warmest Welcome

CITY OF POMPANO BEACH
WTP ELECTRICAL PHASE II IMPROVEMENTS
HIGH SERVICE PUMP 1-4 BUILDING
ELECTRICAL
TYPICAL DETAILS - SHEET I

VERIFY SCALES
BAR IS ONE INCH ON ORIGINAL DRAWING
0 1"
IF NOT ONE INCH ON THIS SHEET, ADJUST SCALES ACCORDINGLY

JOB NO. 8683D.10 (II)
DRAWING NO. T-00-T4
SHEET NO. 49 OF 53

PROJECT NO. 8683D10 FILE NAME: 8683D10-T-00-T4.dgn

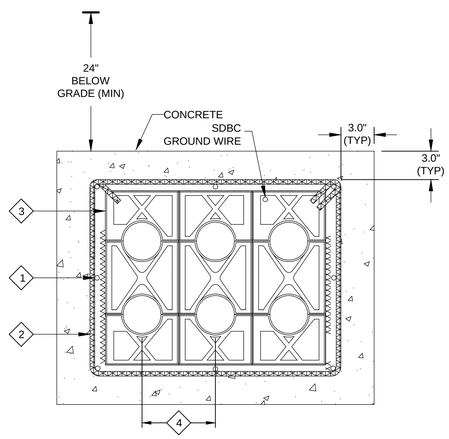

NOTES:

1. DIMENSIONS SHOWN ARE MINIMUM.
2. REFER TO ONE LINE DRAWINGS FOR NUMBER AND SIZE OF CONDUITS.

KEY NOTES:

1. #4 HORIZONTAL REINFORCING STEEL ALONG EACH SIDE OF DUCT BANK.
2. #4 REINFORCING STEEL HOOPS 36" MAXIMUM ON CENTER ALONG LENGTH OF DUCT BANK.
3. PVC CONDUIT SPACERS ON 4'-0" CENTERS (MAXIMUM) LOCATE 12" FROM HOOPS.
4. SPACING PER NEC CODE.

EM001 TYP R REINFORCED CONCRETE DUCT BANK

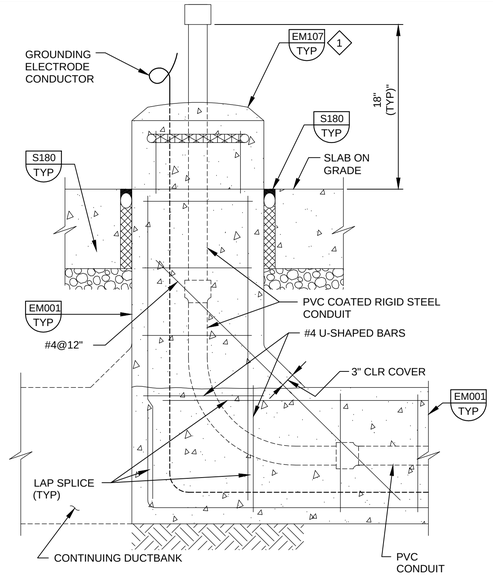

KEY NOTES:

1. PROVIDE CONDUIT HOUSE KEEPING CURB AT ALL LOCATIONS WHERE THE CONDUIT IS NOT PROTECTED BY AN EQUIPMENT PAD.

EM032 TYP S RISER FROM DUCTBANK SLAB ON GRADE

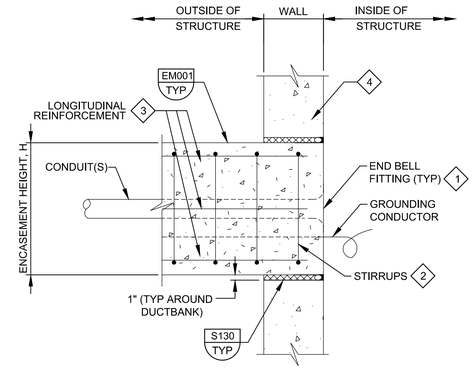

KEY NOTES:

1. PROVIDE GROUNDING FITTING FOR METALLIC CONDUITS ENTERING MANHOLE. BOND GROUNDING FITTING TO DUCTBANK GROUNDING CONDUCTOR.
2. FOR FIRST 12'-0" FROM INSIDE FACE OF STRUCTURE, STIRRUP SPACING IN INCHES = (H-4)/2 WHERE H = CONCRETE ENCASEMENT HEIGHT IN INCHES.
3. ADDITIONAL #4 x 12'-0" @ 12" ON ALL FOUR FACES OF ENCASEMENT. ALTERNATE WITH TYPICAL REINFORCEMENT FOR 6" SPACING.
4. PROVIDE ADDITIONAL REINFORCEMENT AROUND OPENING AS REQUIRED. FOR CAST-IN-PLACE STRUCTURES, PROVIDE REINFORCEMENT PER S180 TYP

EM070 TYP S ENCASED CONDUITS AT MANHOLES OR STRUCTURES - W/O WATERSTOP

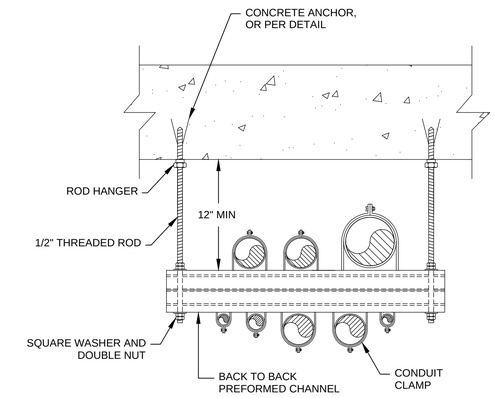

NOTES:

1. FILL UPPER LAYER BEFORE HANGING RACEWAY FROM UNDERSIDE.
2. MATERIAL FOR PREFORMED CHANNEL, FITTINGS, AND CLAMPS SHALL BE AS SPECIFIED IN SECTION 16070.

EM102 TYP R CONDUIT TRAPEZE EXISTING STRUCTURES

11-10-11

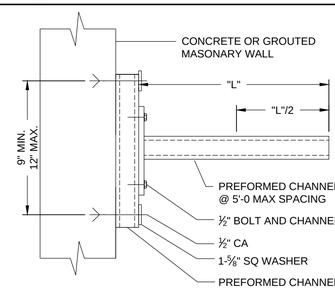

CAPACITY AT MID-POINT	
"L"	LOAD
6"	1800 LBS
12"	1000 LBS
18"	700 LBS
24"	500 LBS

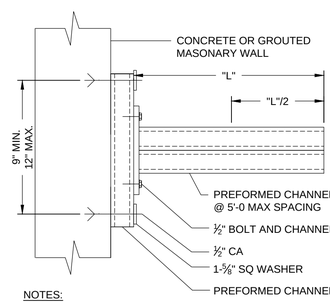

CAPACITY AT MID-POINT	
"L"	LOAD
12"	2000 LBS
18"	1300 LBS
24"	1000 LBS
30"	800 LBS
36"	650 LBS

NOTES:

1. MATERIAL FOR PREFORMED CHANNEL, FITTING, AND CLAMPS SHALL BE AS SPECIFIED IN SECTI16133.

EM110 TYP R CONDUIT SUPPORT

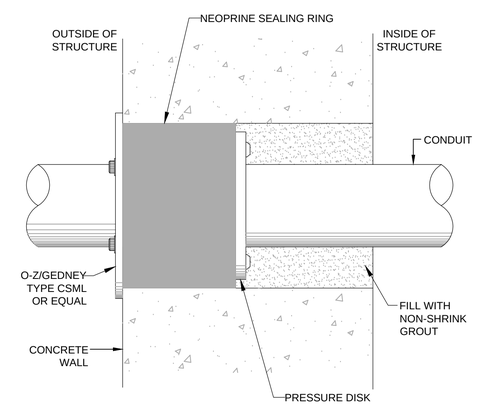

NOTES:

1. USE O-Z/GEDNEY FITTING CSMC OR EQUAL OF THE STRUCTURE HAS AN EXTERIOR MEMBRANE.

EM134 TYP S CORE HOLE CONDUIT WALL PENETRATION

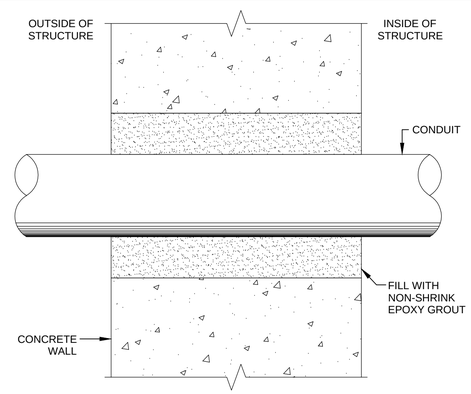

NOTES:

1. ROUGHEN SURFACE OF OPENING AND APPLY EPOXY CEMENT BONDING AGENT IMMEDIATELY PRIOR TO GROUTING.

EM138 TYP S CORE HOLE CONDUIT WALL PENETRATION

REV	DATE	BY	DESCRIPTION
0	SEP - 2014	JB	ISSUED FOR BID

DESIGNED MAG
DRAWN JB
CHECKED CA
DATE SEPTEMBER, 2014
PROJECT ENGINEER

Gamboa Engineers
17433 SW 65 CT
SOUTHWEST RANCHES, FL 33331
TEL. (954)-533-1121

carollo
3440 HOLLYWOOD BOULEVARD, SUITE 465
HOLLYWOOD, FLORIDA 33021
TEL: (954) 837-0030 - FAX: (954) 837-0035

pompano beach
Florida's Warmest Welcome

CITY OF POMPANO BEACH
WTP ELECTRICAL PHASE II IMPROVEMENTS
HIGH SERVICE PUMP 1-4 BUILDING
ELECTRICAL
TYPICAL DETAILS - SHEET II

VERIFY SCALES
BAR IS ONE INCH ON ORIGINAL DRAWING
0 1"
IF NOT ONE INCH ON THIS SHEET, ADJUST SCALES ACCORDINGLY

JOB NO. 8683D.10 (II)
DRAWING NO. T-00-T5
SHEET NO. 50 OF 53

LAST SAVED BY: ccabrera
PROJECT NO. 8683D10 FILE NAME: 8683D10-T-00-T5.dgn

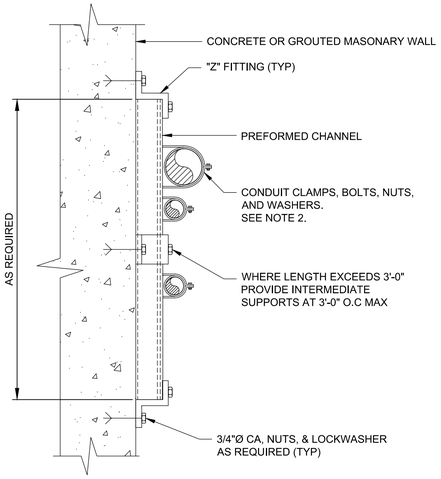

NOTES:

1. THIS DETAIL TYPICAL FOR BOTH VERTICAL AND HORIZONTAL MOUNTING.
2. MATERIAL FOR PREFORMED CHANNEL, FITTINGS, AND CLAMPS SHALL BE AS SPECIFIED IN SECTION 16070.
3. SUPPORTS TO BE SPACED IN ACCORDANCE WITH NEC REQUIREMENTS FOR THE SMALLEST CONDUIT ATTACHED.

EM101 TYP S — CONDUIT SUPPORT

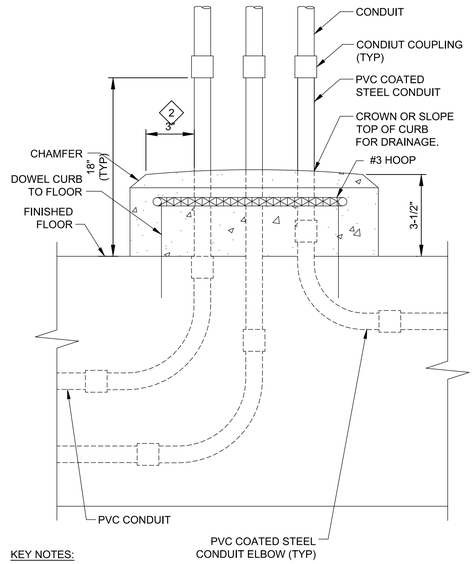

KEY NOTES:

1. COORDINATE REINFORCING STEEL REQUIREMENTS WITH THE GENERAL CONTRACTOR.
2. TYPICAL BOTH SIDES, FRONT AND REAR.

EM107 TYP S — CONDUIT HOUSEKEEPING CURB

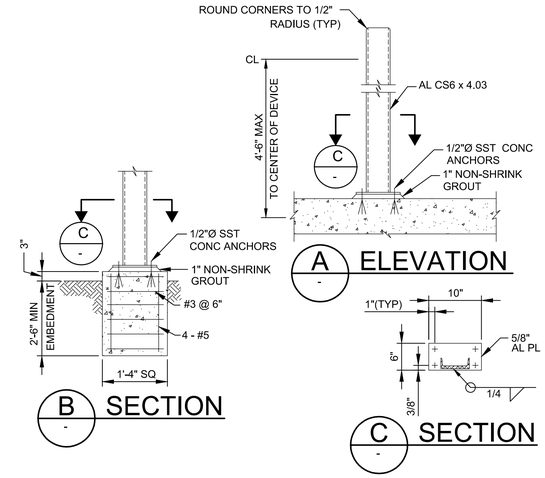

NOTES:

1. WHERE SEPARATE FOUNDATION IS REQD, SEE B
2. COAT ALUMINUM SURFACES IN CONTACT W/CONCRETE PER SPECS.
3. USE SST FASTENERS FOR MOUNTING DEVICES.
4. WEIGHT OF DEVICE(S) SHALL NOT EXCEED 100 POUNDS.

EM201 TYP S — DEVICE SUPPORT AND MOUNTING

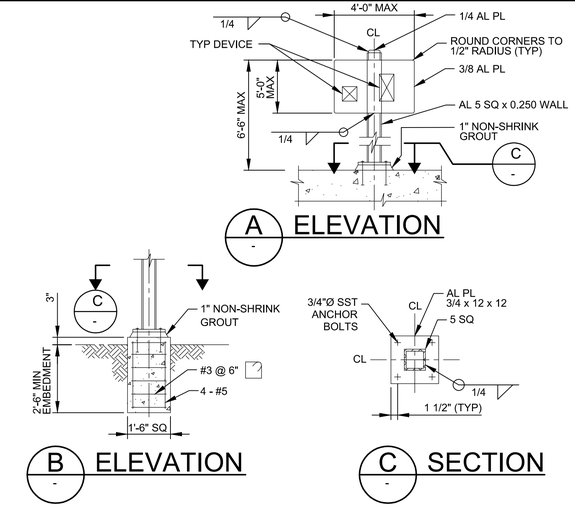

NOTES:

1. WHERE SEPARATE FOUNDATION IS REQD, SEE C
2. COAT ALUMINUM SURFACES IN CONTACT W/ CONCRETE PER SPECS.
3. USE SST FASTENERS FOR MOUNTING DEVICES.
4. WEIGHT OF DEVICE(S) SHALL NOT EXCEED 300 POUNDS.

EM202 TYP S — DEVICE SUPPORT AND MOUNTING

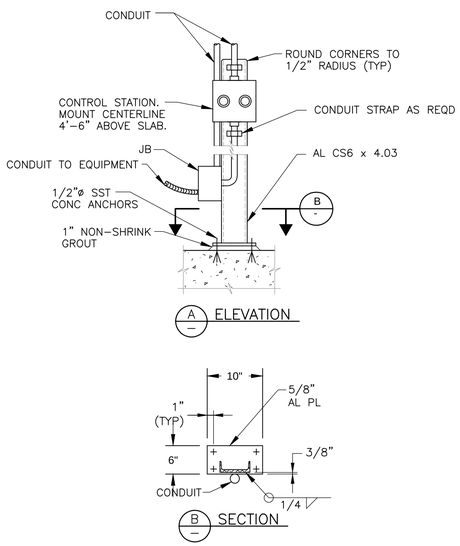

NOTES:

1. COAT ALUMINUM SURFACES IN CONTACT W/ CONCRETE PER SPECS.
2. USE SST FASTENERS FOR MOUNTING DEVICES.

EM203 TYP R — CONTROL STATION

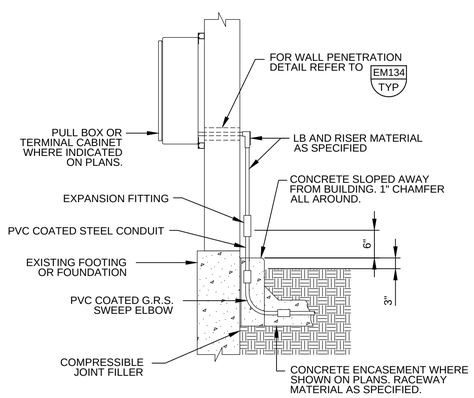

EM219 TYP R — CONDUIT PENETRATION ABOVE GRADE

10-26-11

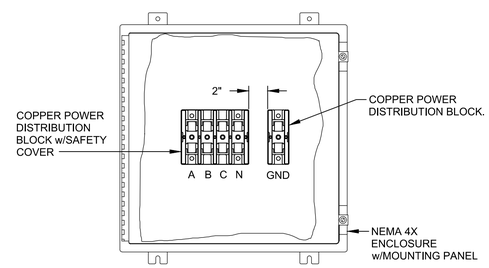

NOTES:

1. CONTRACTOR TO SIZE BOX AND POWER BLOCKS SPACING TO CONFORM TO N.E.C. REQUIRMENTS.

EM480 TYP S — TYPICAL POWER J-BOX DETAIL

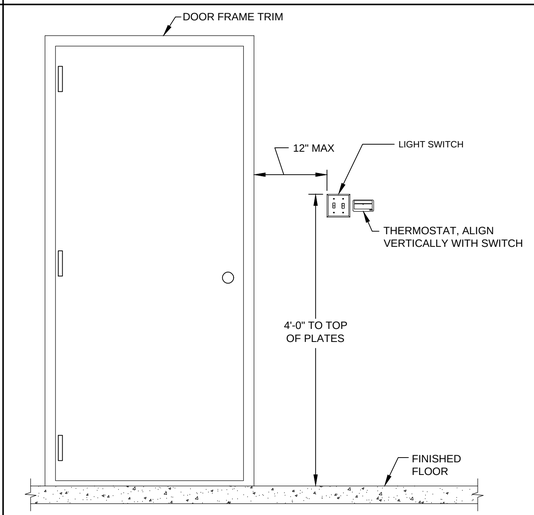

EM725 TYP R — OUTLET BOX MOUNTING

09-29-11

REV	DATE	BY	DESCRIPTION
0	SEP - 2014	JB	ISSUED FOR BID

DESIGNED JDS
DRAWN JB
CHECKED
DATE SEPTEMBER, 2014
PROJECT ENGINEER

LAST SAVED BY: ccabrera

Gamboa Engineers
17433 SW 65 CT
SOUTHWEST RANCHES, FL 33331
TEL. (954)-533-1121

carollo
3440 HOLLYWOOD BOULEVARD, SUITE 465
HOLLYWOOD, FLORIDA 33021
TEL: (954) 837-0030 - FAX: (954) 837-0035

pompano beach
Florida's Warmest Welcome

CITY OF POMPANO BEACH
WTP ELECTRICAL PHASE II IMPROVEMENTS
HIGH SERVICE PUMP 1-4 BUILDING
ELECTRICAL
TYPICAL DETAILS - SHEET III

VERIFY SCALES
BAR IS ONE INCH ON ORIGINAL DRAWING
0 1"
IF NOT ONE INCH ON THIS SHEET, ADJUST SCALES ACCORDINGLY

JOB NO. 8683D.10 (II)
DRAWING NO. T-00-T6
SHEET NO. 51 OF 53

PROJECT NO. 8683D10 FILE NAME: 8683D10-T-00-T6.dgn

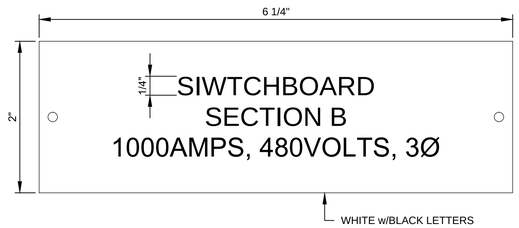

EN001 TYPICAL SWITCHBOARD SECTION NAMEPLATE
TYP S

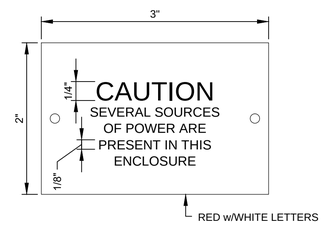

EN002 TYPICAL CAUTION NAMEPLATE
TYP S

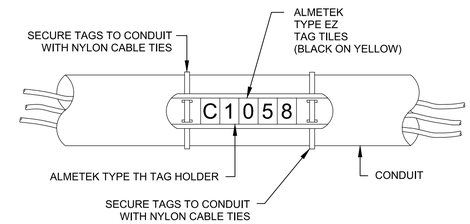

EN006 TYPICAL CONDUIT MARKING SYSTEM
TYP S

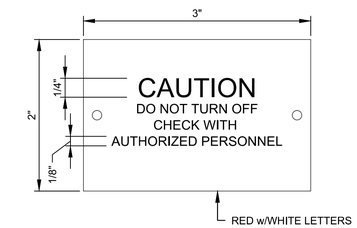

EN021 LOCAL CONTROL &
OPERATOR STATIONS NAME PLATES
TYP S

REV	DATE	BY	DESCRIPTION
0	SEP - 2014	JB	ISSUED FOR BID

DESIGNED MAG
DRAWN JB
CHECKED CA
DATE SEPTEMBER, 2014
PROJECT ENGINEER

Gamboa Engineers
17433 SW 65 CT
SOUTHWEST RANCHES, FL 33331
TEL. (954)-533-1121

carollo
3440 HOLLYWOOD BOULEVARD, SUITE 465
HOLLYWOOD, FLORIDA 33021
TEL: (954) 837-0030 - FAX: (954) 837-0035

pompano beach
Florida's Warmest Welcome

CITY OF POMPANO BEACH
WTP ELECTRICAL PHASE II IMPROVEMENTS
HIGH SERVICE PUMP 1-4 BUILDING
ELECTRICAL
TYPICAL DETAILS - SHEET IV

VERIFY SCALES
BAR IS ONE INCH ON ORIGINAL DRAWING
0 1"
IF NOT ONE INCH ON THIS SHEET, ADJUST SCALES ACCORDINGLY

JOB NO. 8683D.10 (II)
DRAWING NO. T-00-T7
SHEET NO. 52 OF 53

LAST SAVED BY: ccabrera
PROJECT NO. 8683D10 FILE NAME: 8683D10-T-00-T6.dgn

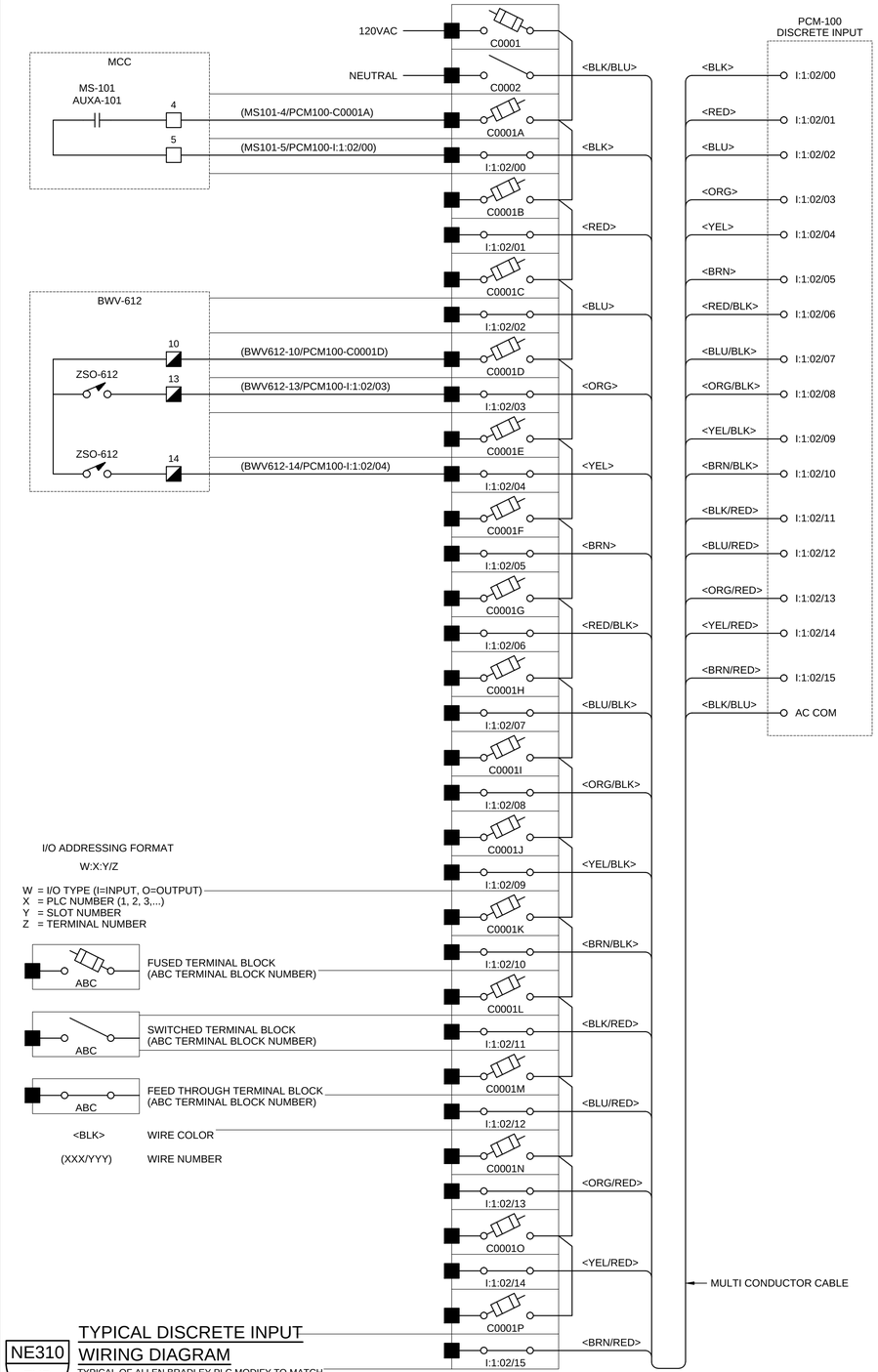

NE310
TYP
S

TYPICAL DISCRETE INPUT WIRING DIAGRAM

TYPICAL OF ALLEN BRADLEY PLC MODIFY TO MATCH
OTHER PLC MANUFACTURER'S I/O NUMBERING SYSTEM

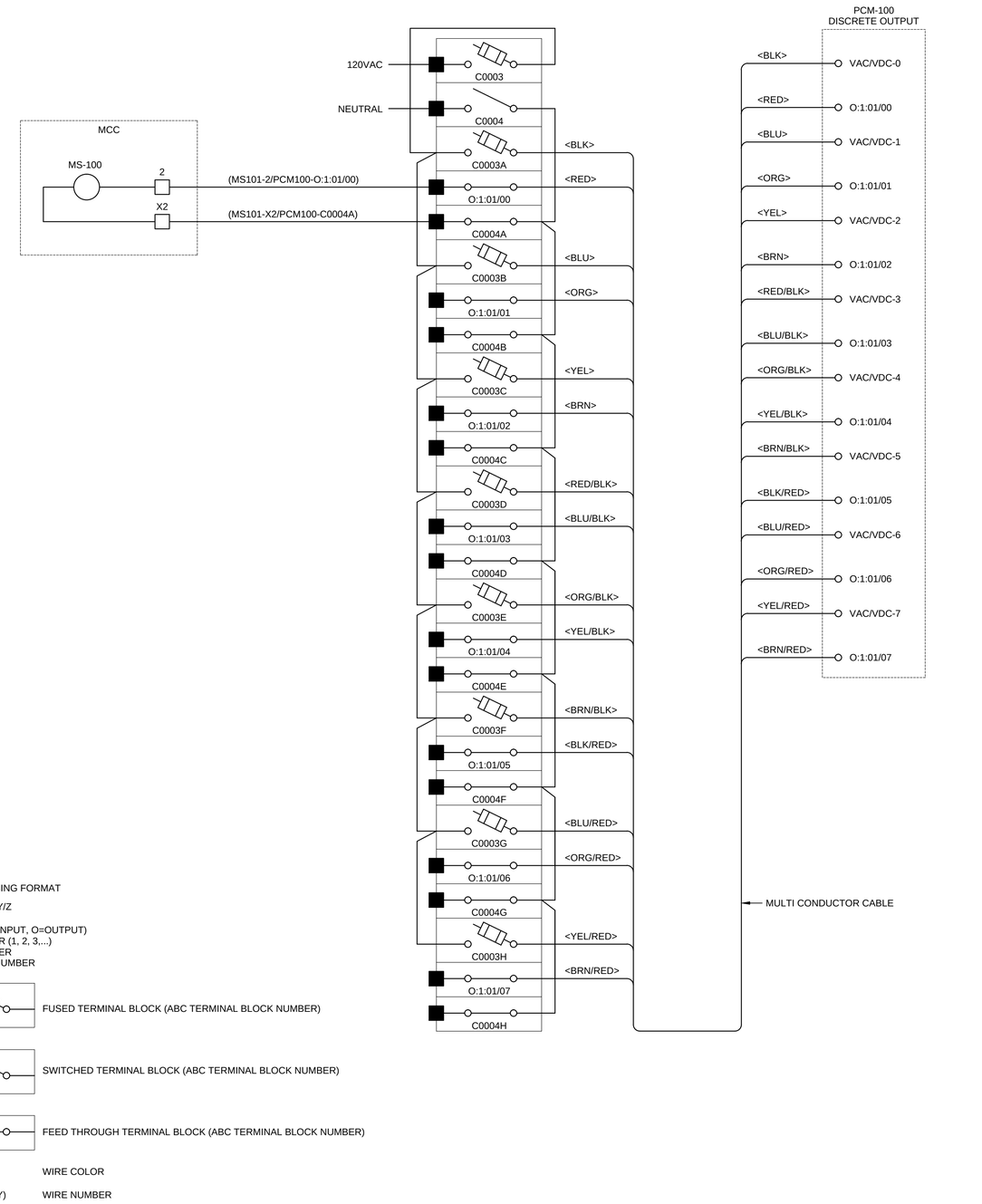

NE311
TYP
S

TYPICAL DISCRETE (RELAY) OUTPUT WIRING DIAGRAM

TYPICAL OF ALLEN BRADLEY PLC MODIFY TO MATCH
OTHER PLC MANUFACTURER'S I/O NUMBERING SYSTEM

REV	DATE	BY	DESCRIPTION
0	SEP - 2014	JB	ISSUED FOR BID

DESIGNED MAG
DRAWN JB
CHECKED CA
DATE SEPTEMBER, 2014
PROJECT ENGINEER

Gamboa Engineers
17433 SW 65 CT
SOUTHWEST RANCHES, FL 33331
TEL. (954)-533-1121

carollo
3440 HOLLYWOOD BOULEVARD, SUITE 465
HOLLYWOOD, FLORIDA 33021
TEL: (954) 837-0030 - FAX: (954) 837-0035

pompano beach
Florida's Warmest Welcome

CITY OF POMPANO BEACH
WTP ELECTRICAL PHASE II IMPROVEMENTS
HIGH SERVICE PUMP 1-4 BUILDING
ELECTRICAL
TYPICAL DETAILS - SHEET V

VERIFY SCALES
BAR IS ONE INCH ON ORIGINAL DRAWING
0 1"
IF NOT ONE INCH ON THIS SHEET, ADJUST SCALES ACCORDINGLY

JOB NO. 8683D.10 (II)
DRAWING NO. T-00-T8
SHEET NO. 53 OF 53

LAST SAVED BY: ccabrera
PROJECT NO. 8683D10 FILE NAME: 8683D10-T-00-T6.dgn