Reuse Water Treatment Plant
1799 N Federal Hwy
Pompano Beach, FL 33060

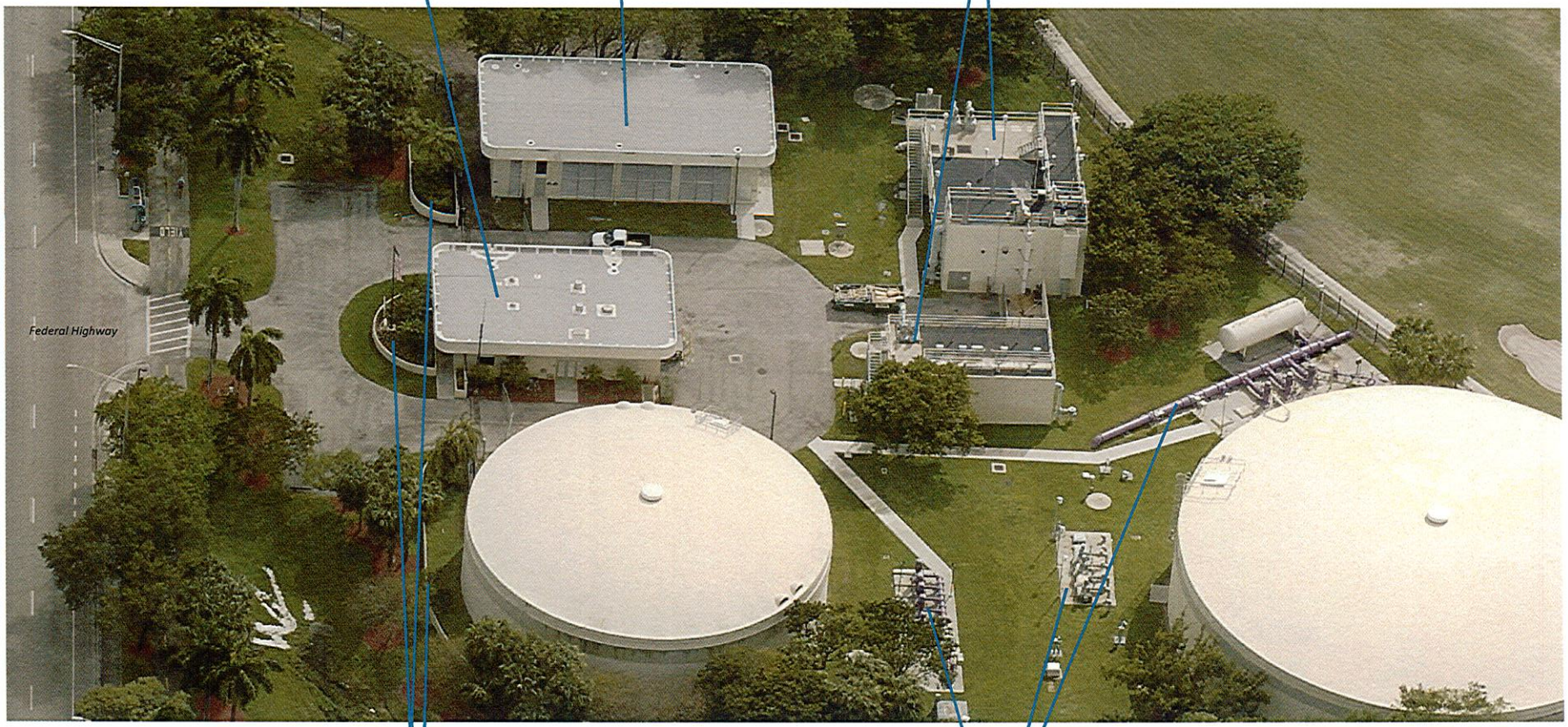

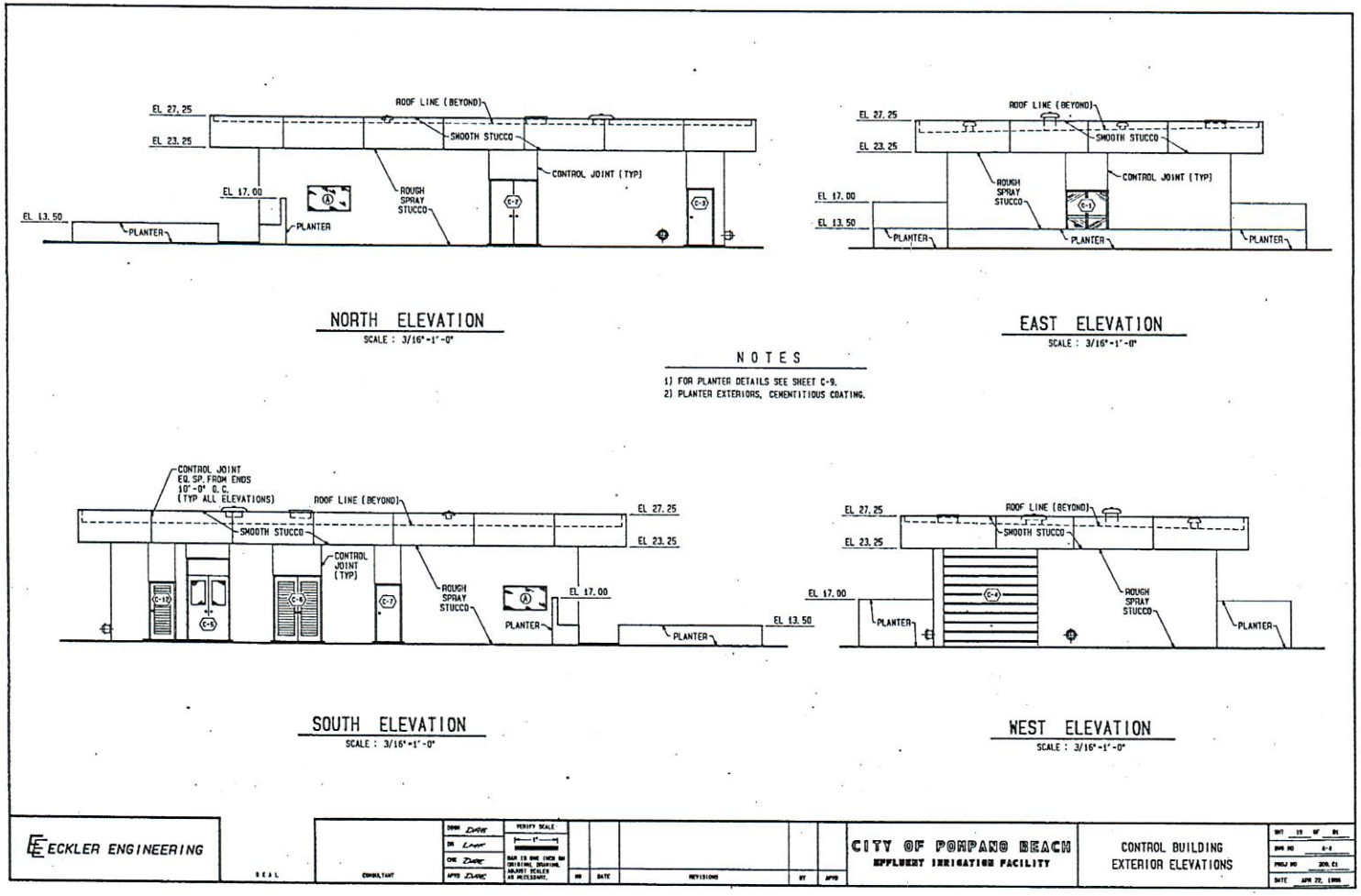
EL 27.25
EL 23.25
ROOF LINE (BEYOND)
SMOOTH STUCCO
CONTROL JOINT (TYP)
EL 17.00
EL 13.50
ROUGH SPRAY STUCCO
PLANTER
NORTH ELEVATION
SCALE : 3/16"=1'-0"
EAST ELEVATION
SCALE : 3/16"=1'-0"
NOTES
1) FOR PLANTER DETAILS SEE SHEET C-9.
2) PLANTER EXTERIORS, CEMENTITIOUS COATING.
CONTROL JOINT EQ. SP. FROM ENDS 10'-0" O.C. (TYP ALL ELEVATIONS)
SOUTH ELEVATION
SCALE : 3/16"=1'-0"
WEST ELEVATION
SCALE : 3/16"=1'-0"
ECKLER ENGINEERING
CITY OF POMPANO BEACH
EFFLUENT IRRIGATION FACILITY
CONTROL BUILDING
EXTERIOR ELEVATIONS

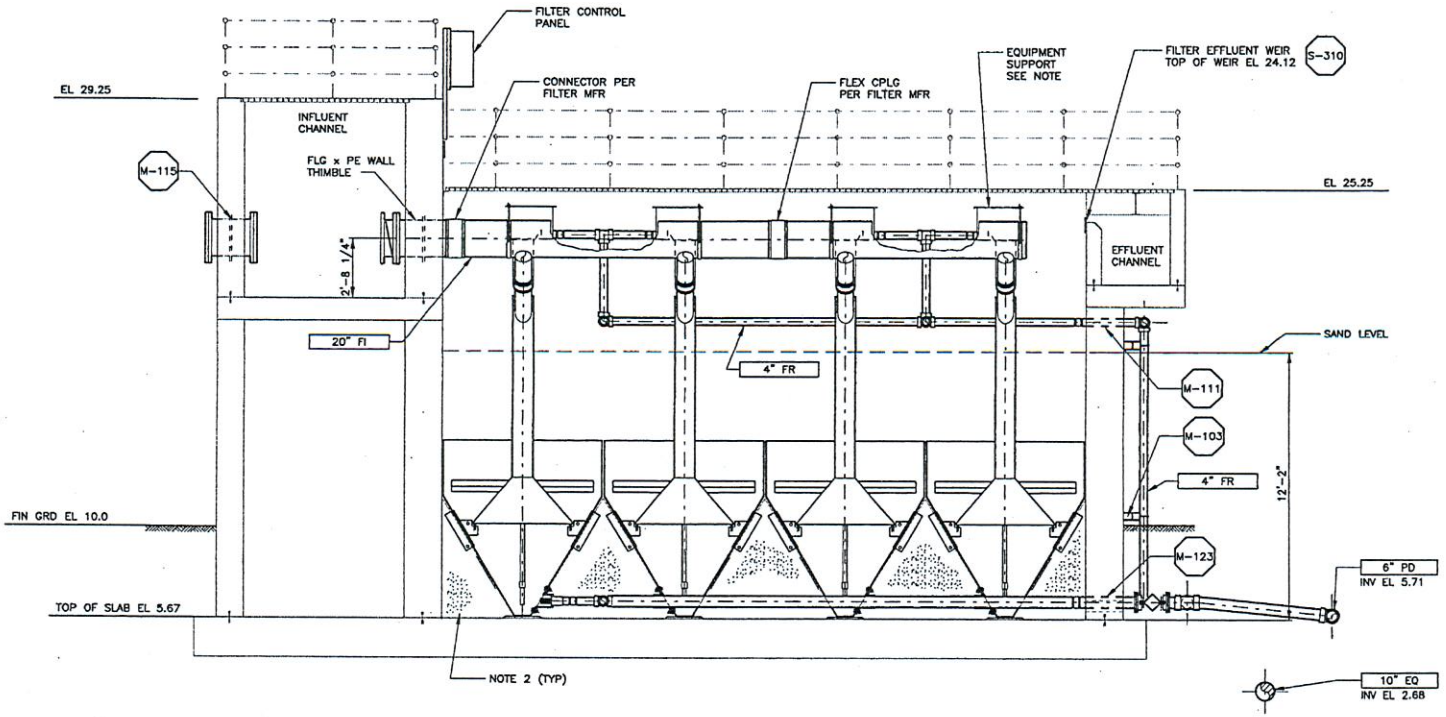

SECTION A / 2M-2

NOTES:

1. PIPE AND EQUIPMENT SUPPORTS INTERNAL TO FILTER CHAMBER SHALL BE TYPE 316 STN STL AND BE LOCATED PER MFR'S RECOMMENDATIONS.
2. INSTALL NON-SHRINK GROUT UNDER FILTER CONE ELEMENTS ACCORDING TO FILTER MFR'S REQUIREMENTS.

JOB No. 166.021801 FILE No. p:\pompanobeach\1324166\801\14cad\mss\pbmr2m03.dgn PLOT DATE: 05-NOV-1999 TIME: 14:30

REV	DATE	BY	DESCRIPTION

SCALE: 3/8"=1'-0"

WARNING 0 1/2 1 IF THIS BAR DOES NOT MEASURE 1" THEN DRAWING IS NOT TO SCALE.

DESIGNED D. BAAR
DRAWN D. DAVIS
CHECKED *

SUBMITTED
PROJECT MANAGER LICENSE NO. DATE
RECOMMENDED
MONTGOMERY WATSON LICENSE NO. DATE

MONTGOMERY WATSON
Ft. Lauderdale, Florida

City of Pompano Beach, Florida
Water Resource Center
Treated Wastewater Effluent
Irrigation Facility Expansion

TREATED WASTEWATER EFFLUENT IRRIGATION FACILITY EXPANSION
FILTER SECTION

SHEET 2M-3

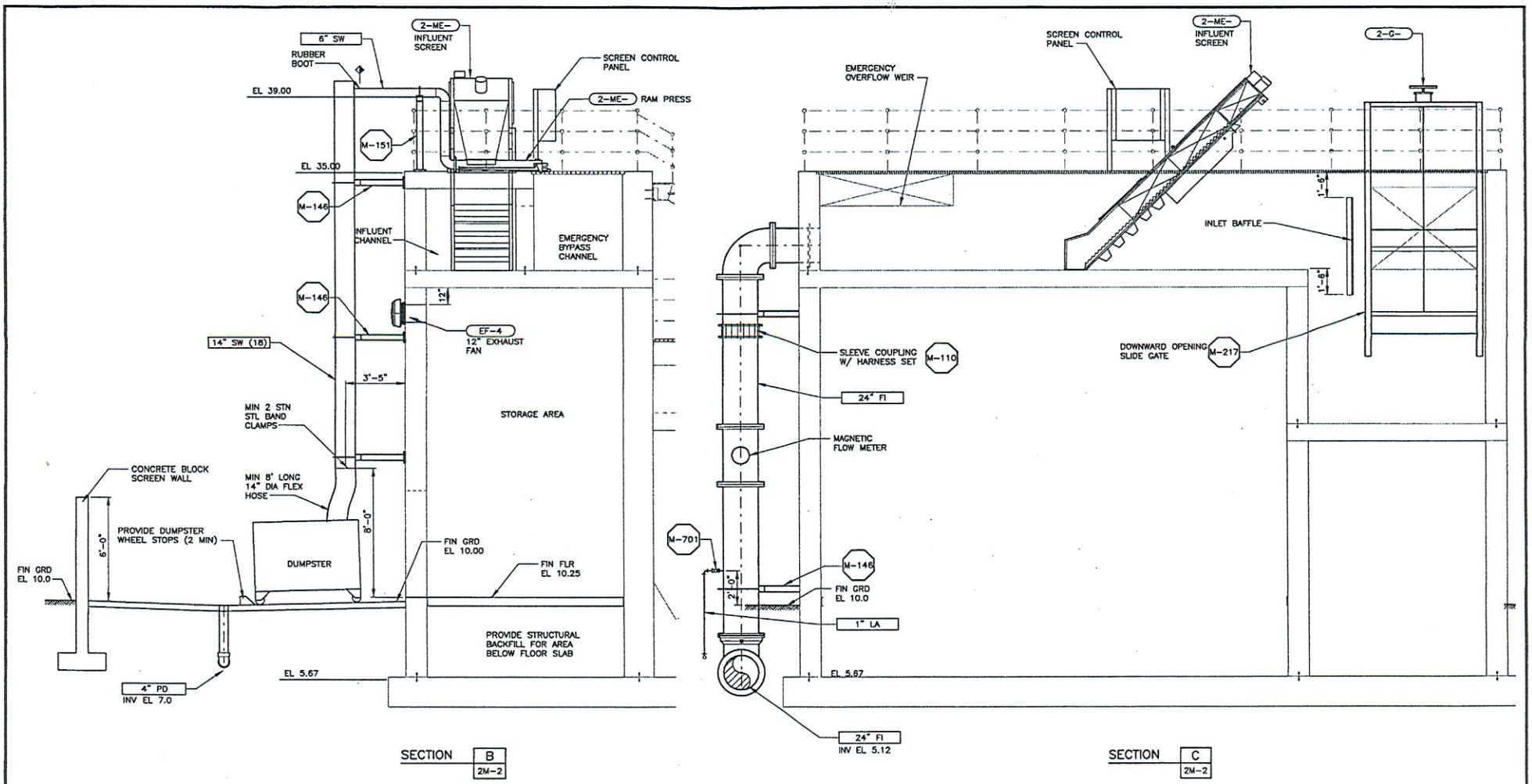

REV	DATE	BY	DESCRIPTION

SCALE: 3/8"=1'-0"

WARNING 0 1/2 1 IF THIS BAR DOES NOT MEASURE 1" THEN DRAWING IS NOT TO SCALE.

DESIGNED D. BAAR
DRAWN D. DAVIS
CHECKED

SUBMITTED
PROJECT MANAGER LICENSE NO. DATE
RECOMMENDED
MONTGOMERY WATSON LICENSE NO. DATE

MONTGOMERY WATSON
Ft. Lauderdale, Florida

City of Pompano Beach, Florida
Water Resource Center
Treated Wastewater Effluent
Irrigation Facility Expansion

TREATED WASTEWATER EFFLUENT IRRIGATION FACILITY EXPANSION
FILTER SECTIONS

SHEET 2M-4

JOB No. 166.021801 FILE No. p:\pompanobeach\1324166\801\14cadd\mec\pbwrc2m04.dgn PLOT DATE: 05-NOV-1999 TIME: 13:12

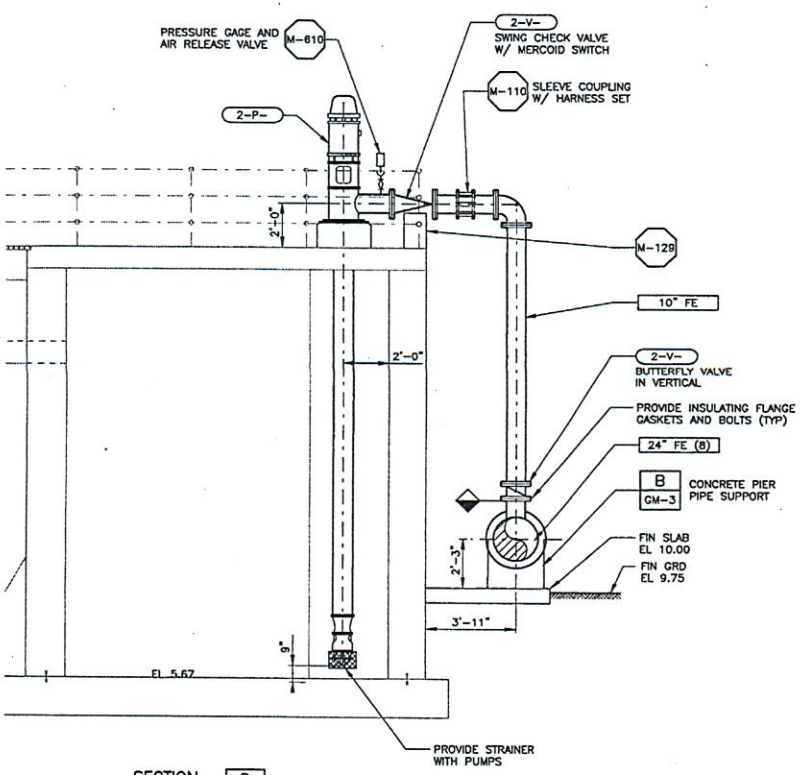

SECTION D 2M-2

JOB No. 166.021801 FILE No. p:\pompanobeach\1324166\801\14cadd\mec\pbwrc2m05.dgn PLOT DATE: 05-NOV-1999 TIME: 13:13

REV	DATE	BY	DESCRIPTION

SCALE: 3/8"=1'-0"

WARNING 0 1/2 1 IF THIS BAR DOES NOT MEASURE 1" THEN DRAWING IS NOT TO SCALE.

DESIGNED D. BAAR
DRAWN D. DAVIS
CHECKED *

SUBMITTED
PROJECT MANAGER LICENSE NO. DATE
RECOMMENDED
MONTGOMERY WATSON LICENSE NO. DATE

MONTGOMERY WATSON
Ft. Lauderdale, Florida

City of Pompano Beach, Florida
Water Resource Center
Treated Wastewater Effluent
Irrigation Facility Expansion

TREATED WASTEWATER EFFLUENT IRRIGATION FACILITY EXPANSION

FILTER SECTIONS

SHEET 2M-5

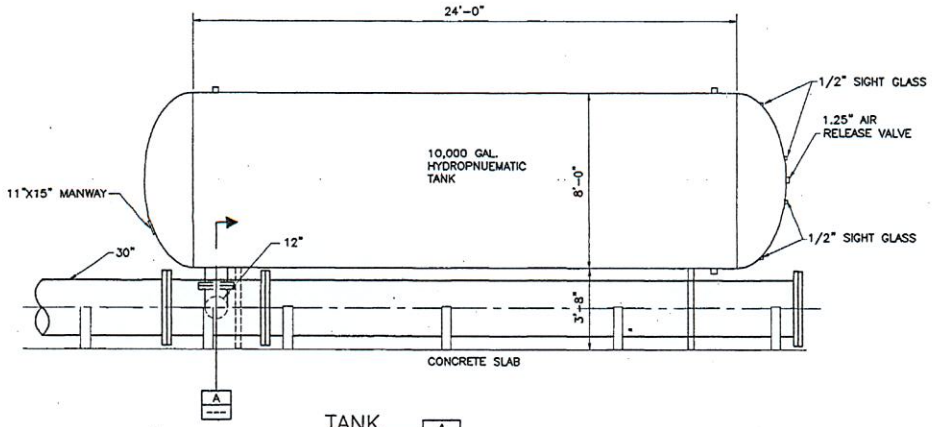

TANK A 4M-1

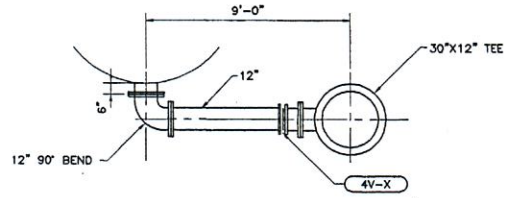

SECTION A 4M-3

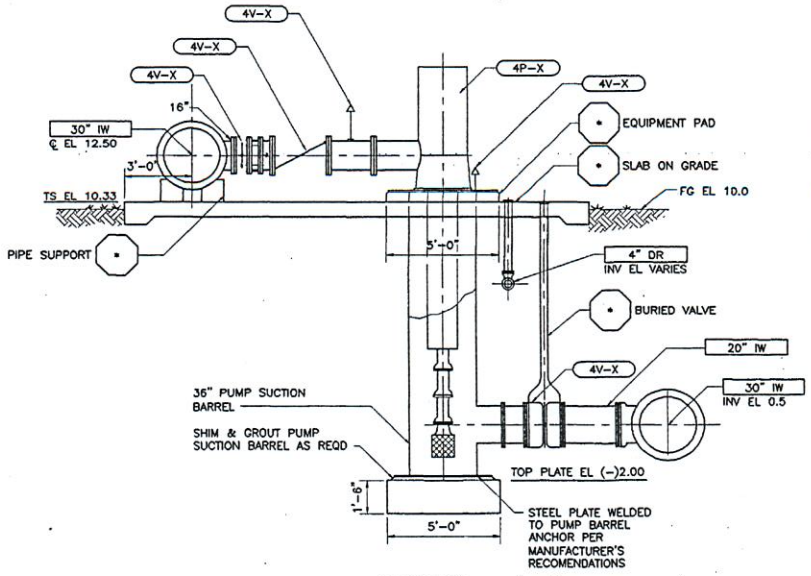

SECTION A 4M-1

REV	DATE	BY	DESCRIPTION
•	•	•	•

SCALE: 3/8"=1'-0"

WARNING 0 1/2 1 IF THIS BAR DOES NOT MEASURE 1" THEN DRAWING IS NOT TO SCALE.

DESIGNED ECKLER ENG
DRAWN ECKLER ENG
CHECKED •

SUBMITTED
PROJECT ENGINEER LICENSE NO. DATE
RECOMMENDED
MONTGOMERY WATSON LICENSE NO. DATE

MONTGOMERY WATSON
Ft. Lauderdale, Florida

City of Pompano Beach, Florida
Treated Wastewater Effluent
Irrigation Facility Expansion

TREATED WASTEWATER EFFLUENT IRRIGATION FACILITY EXPANSION
LOW PRESSURE DISTRIBUTION PUMP STATION
PLAN AND SECTION

SHEET 4M-2

JOB No. • FILE No. X:\Drawings\MONT_WAT\1324168\801\mec\pbwrC4M02.dwg PLOT DATE: Nov 05, 1999 TIME: 13:54:26

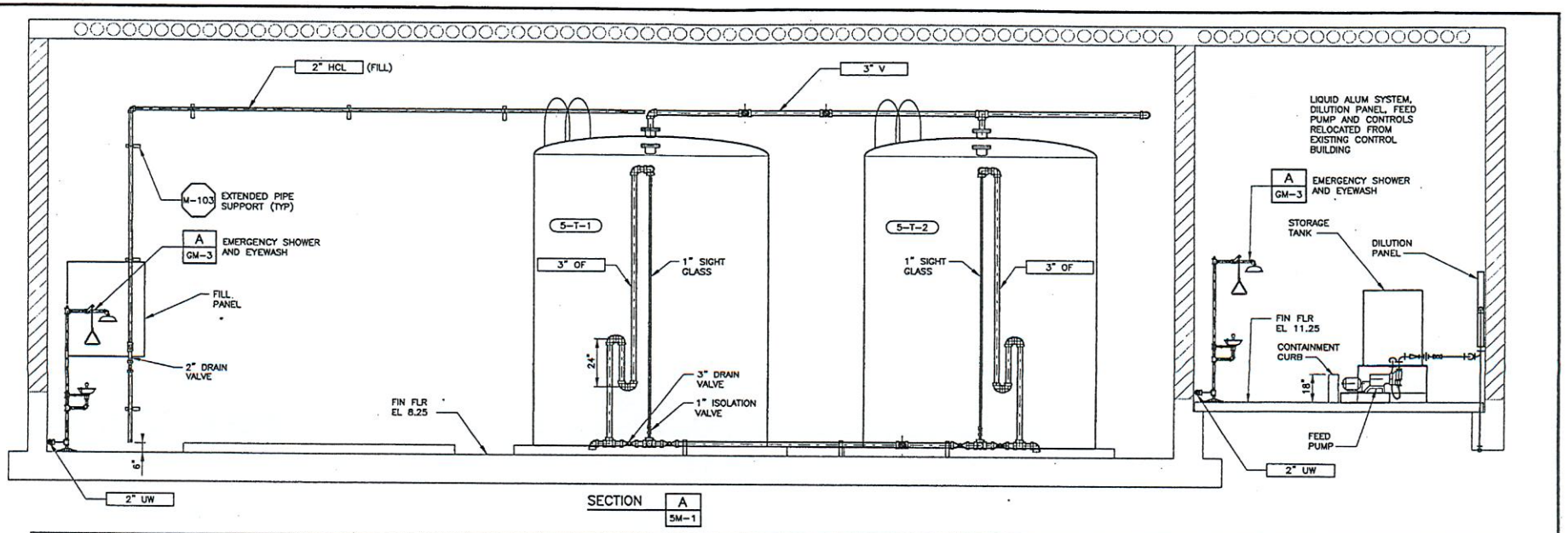

SECTION A 5M-1

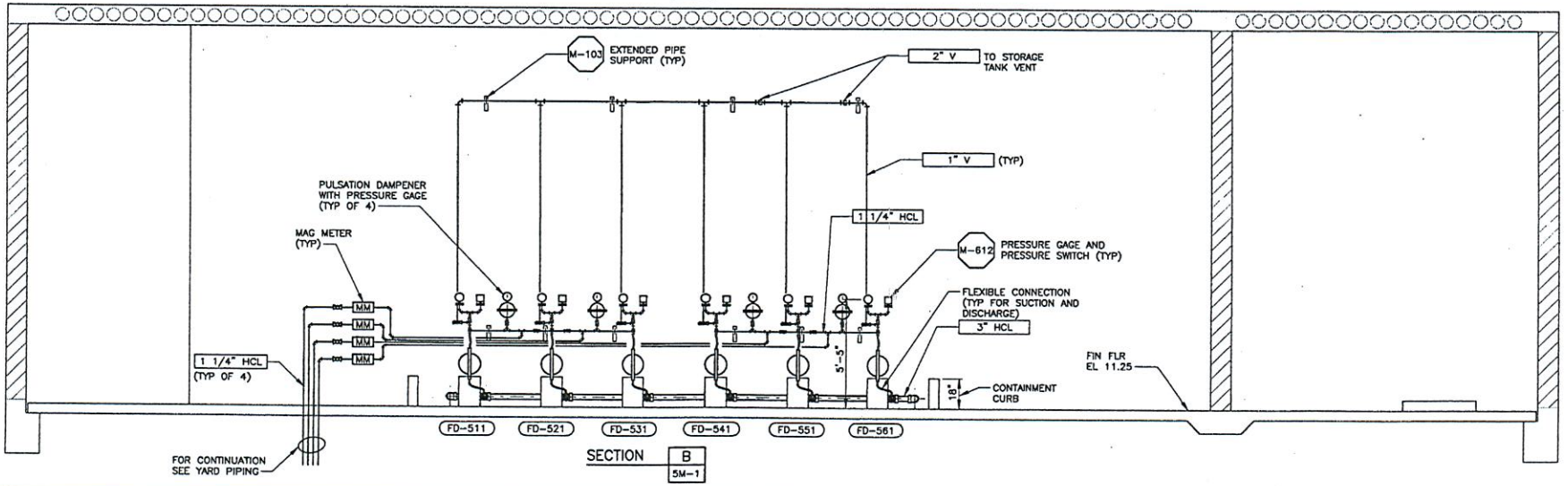

SECTION B 5M-1

JOB No. 166.021801 FILE No. g:\pompanobeach\1324168\001\14cad\mes\pbwrc5m02.dgn PLOT DATE: 09-NOV-1999 TIME: 13:15

REV	DATE	BY	DESCRIPTION

SCALE: 3/8" = 1'-0"

WARNING 0 1/2 1 IF THIS BAR DOES NOT MEASURE 1" THEN DRAWING IS NOT TO SCALE.

DESIGNED D. BAAR
DRAWN D. DAVIS
CHECKED

SUBMITTED
PROJECT MANAGER LICENSE NO. DATE
RECOMMENDED
MONTGOMERY WATSON LICENSE NO. DATE

MONTGOMERY WATSON
Ft. Lauderdale, Florida

City of Pompano Beach, Florida
Water Resource Center
Treated Wastewater Effluent
Irrigation Facility Expansion

TREATED WASTEWATER EFFLUENT IRRIGATION FACILITY EXPANSION
CHEMICAL BUILDING – SECTION

SHEET 5M-2

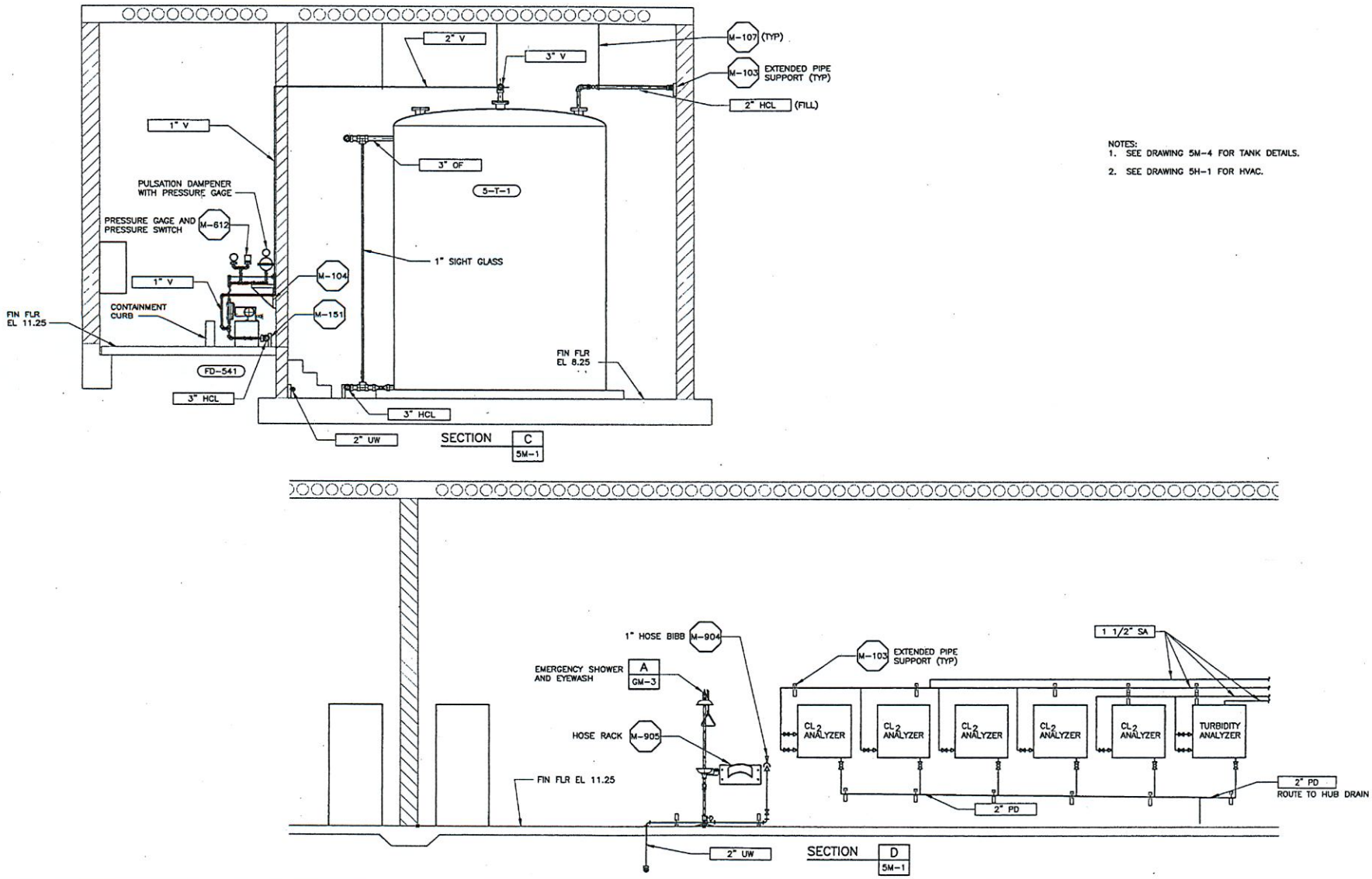

NOTES:
1. SEE DRAWING 5M-4 FOR TANK DETAILS.
2. SEE DRAWING 5H-1 FOR HVAC.

REV	DATE	BY	DESCRIPTION

SCALE: 3/8" = 1'-0"

WARNING: 0 1/2 1 — IF THIS BAR DOES NOT MEASURE 1" THEN DRAWING IS NOT TO SCALE.

DESIGNED D. BAAR
DRAWN D. DAVIS
CHECKED *

SUBMITTED
PROJECT MANAGER LICENSE NO. DATE
RECOMMENDED
MONTGOMERY WATSON LICENSE NO. DATE

MONTGOMERY WATSON
Ft. Lauderdale, Florida

City of Pompano Beach, Florida
Water Resource Center
Treated Wastewater Effluent
Irrigation Facility Expansion

TREATED WASTEWATER EFFLUENT IRRIGATION FACILITY EXPANSION
CHEMICAL BUILDING – SECTION

SHEET 5M-3

JOB No. 166.021801 FILE No. p:\pompanobeach\1324166\801\14cadd\msc\pbwrc5m03.dgn PLOT DATE: 05-NOV-1999 TIME: 13:16

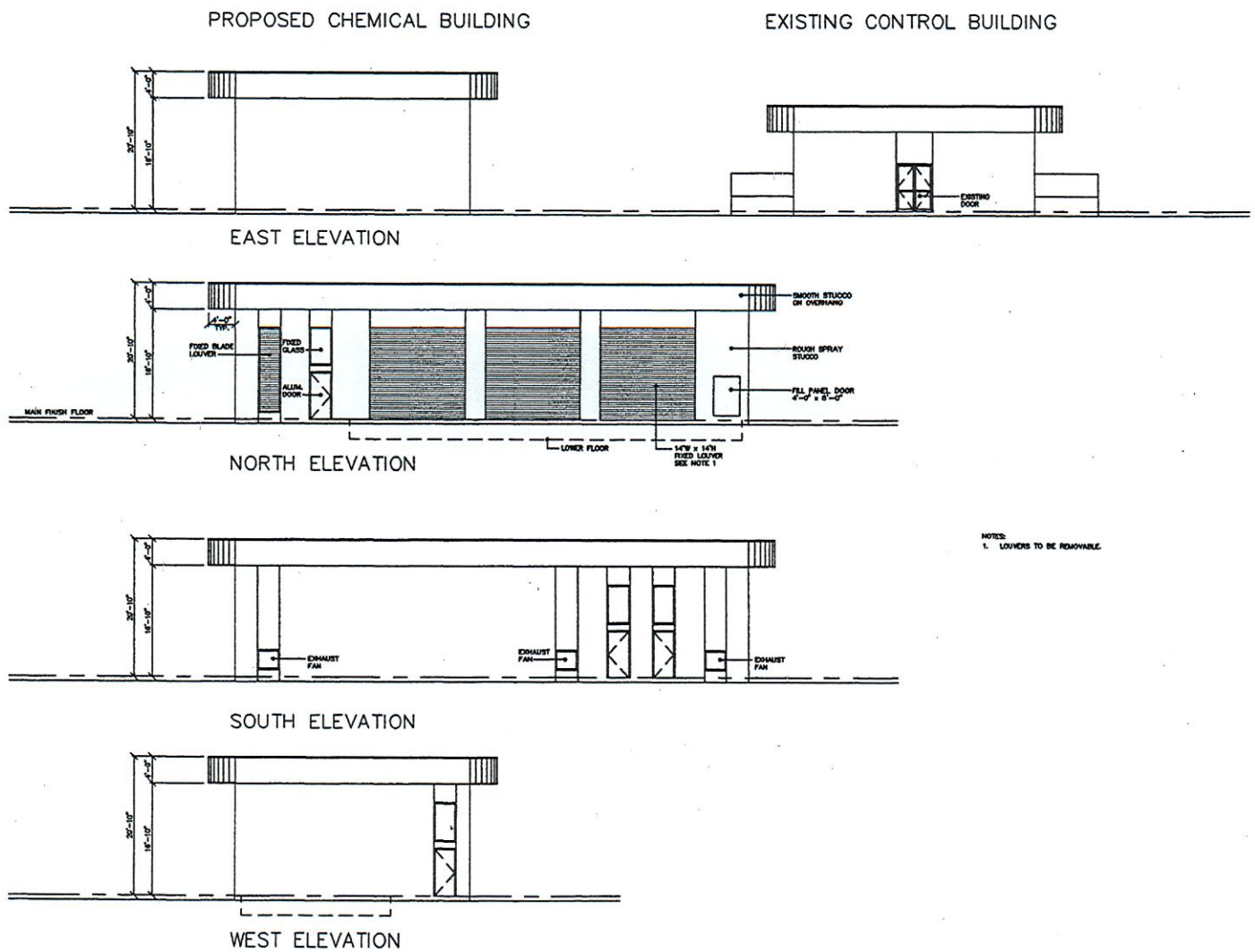

NOTES:
1. LOUVERS TO BE REMOVABLE.

REV	DATE	BY	DESCRIPTION
•	•	•	•

SCALE: 1/8"=1'-0"

WARNING: 0 1/2 1 — IF THIS BAR DOES NOT MEASURE 1" THEN DRAWING IS NOT TO SCALE.

DESIGNED ECKLER ENG
DRAWN ECKLER ENG
CHECKED •

SUBMITTED
PROJECT ENGINEER LICENSE NO. DATE
RECOMMENDED
MONTGOMERY WATSON LICENSE NO. DATE

MONTGOMERY WATSON
Ft. Lauderdale, Florida

City of Pompano Beach, Florida
Treated Wastewater Effluent
Irrigation Facility Expansion

TREATED WASTEWATER EFFLUENT IRRIGATION FACILITY EXPANSION
CHEMICAL FEED BUILDING ELEVATIONS

SHEET 5A-1

JOB No. • FILE No. X:\Drawings\MONT_WAT\1324166\801\Arch\pbwrco01.dwg PLOT DATE: Nov 08, 1999 TIME: 10:06:32

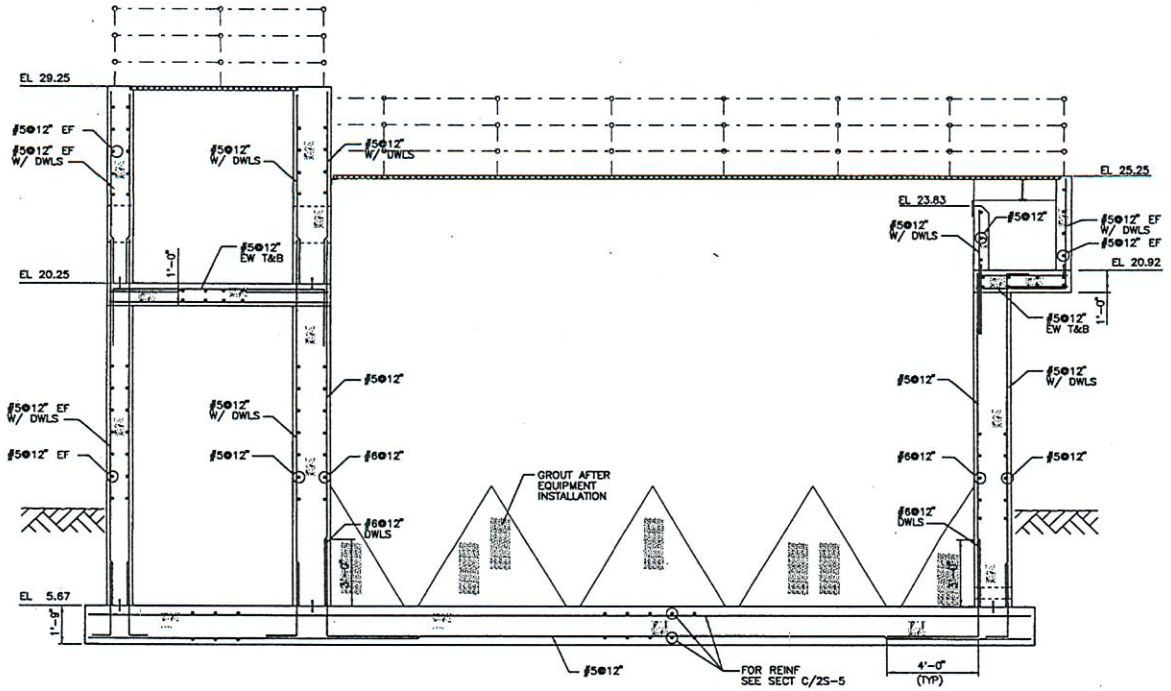

SECTION A 2S-1

STRUCTURAL ENGINEER LICENSE NO. DATE

REV	DATE	BY	DESCRIPTION

SCALE: 3/8" = 1'-0"

WARNING 0 1/2 1 IF THIS BAR DOES NOT MEASURE 1" THEN DRAWING IS NOT TO SCALE.

DESIGNED A BACHTIAR
DRAWN A BACHTIAR
CHECKED

SUBMITTED
PROJECT MANAGER LICENSE NO. DATE
RECOMMENDED
MONTGOMERY WATSON LICENSE NO. DATE

MONTGOMERY WATSON
Ft. Lauderdale, Florida

City of Pompano Beach, Florida
Water Resource Center
Treated Wastewater Effluent
Irrigation Facility Expansion

TREATED WASTEWATER EFFLUENT IRRIGATION FACILITY EXPANSION

FILTRATION BASIN
SECTION – I

SHEET 2S-3

JOB No. 166.021801 FILE No. g:\proj\pompano\str\pbwrc2s03.dgn PLOT DATE: 06-NOV-1999 TIME: 11:20

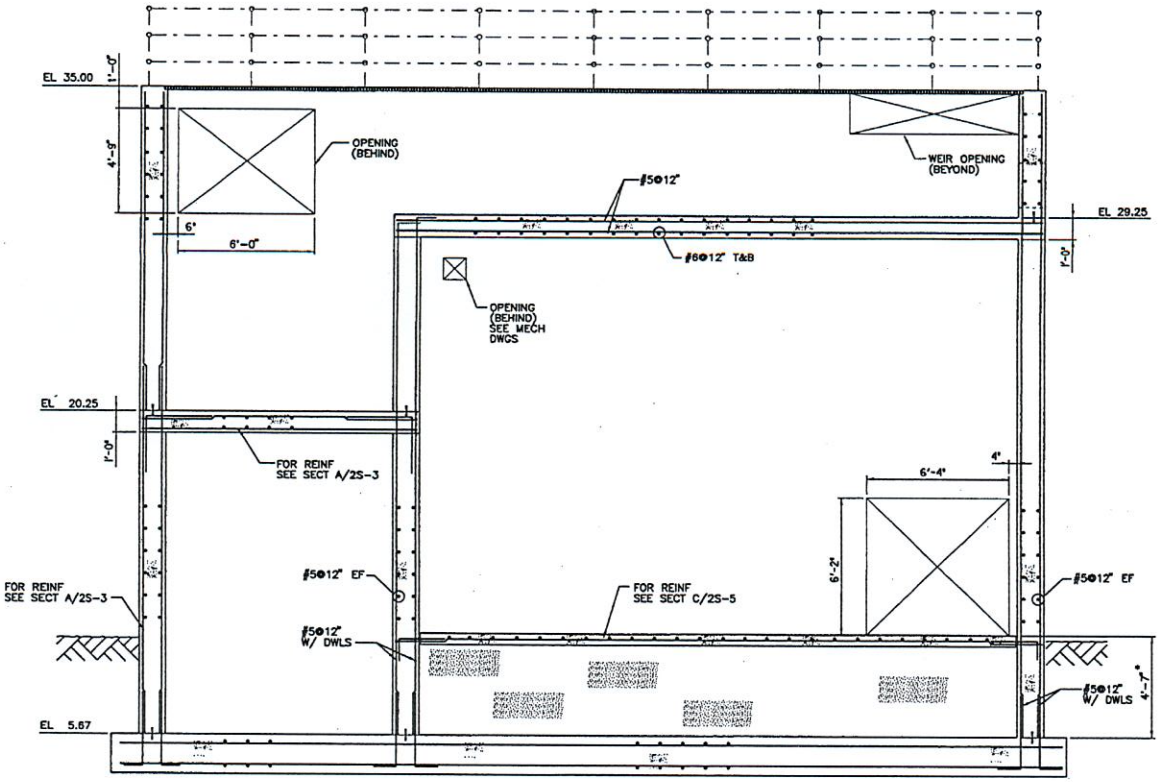

NOTE

* COORDINATE DIMENSION WITH FINISH GRADE ELEVATION, SEE CIVIL DRAWINGS.

SECTION B / 2S-1

STRUCTURAL ENGINEER LICENSE NO. DATE

REV	DATE	BY	DESCRIPTION

SCALE: 3/8" = 1'-0"

WARNING: 0 1/2 1 — IF THIS BAR DOES NOT MEASURE 1" THEN DRAWING IS NOT TO SCALE.

DESIGNED A. BACHTIAR
DRAWN A. BACHTIAR
CHECKED

SUBMITTED
PROJECT MANAGER LICENSE NO. DATE
RECOMMENDED
MONTGOMERY WATSON LICENSE NO. DATE

MONTGOMERY WATSON
Ft. Lauderdale, Florida

City of Pompano Beach, Florida
Water Resource Center
Treated Wastewater Effluent
Irrigation Facility Expansion

TREATED WASTEWATER EFFLUENT IRRIGATION FACILITY EXPANSION

FILTRATION BASIN
SECTION – II

SHEET 2S-4

JOB No. 166.021601 FILE No. g:\proj\pompano\str\pbwrc2s04.dgn PLOT DATE: 06-NOV-1999 TIME: 11:20

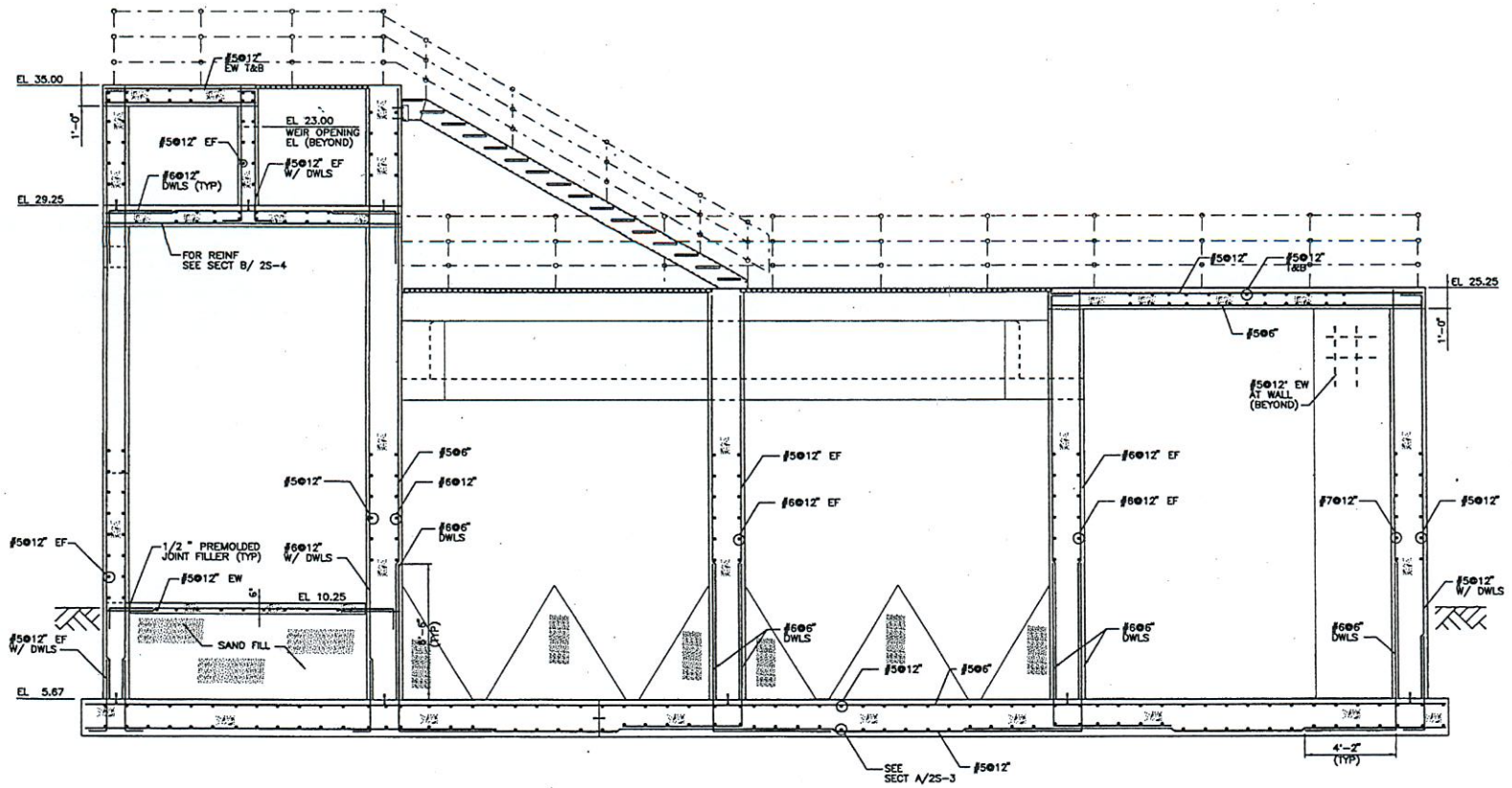

SECTION C 2S-1 2S-2

STRUCTURAL ENGINEER LICENSE NO. DATE

REV	DATE	BY	DESCRIPTION

SCALE: 3/8" = 1'-0"

WARNING: 0 1/2 1 — IF THIS BAR DOES NOT MEASURE 1" THEN DRAWING IS NOT TO SCALE.

DESIGNED A. BACHTIAR
DRAWN A. BACHTIAR
CHECKED

SUBMITTED
PROJECT MANAGER LICENSE NO. DATE
RECOMMENDED
MONTGOMERY WATSON LICENSE NO. DATE

MONTGOMERY WATSON
Ft. Lauderdale, Florida

City of Pompano Beach, Florida
Water Resource Center
Treated Wastewater Effluent
Irrigation Facility Expansion

TREATED WASTEWATER EFFLUENT IRRIGATION FACILITY EXPANSION

FILTER BASIN
SECTION – III

SHEET 2S-5

JOB No. 166.021601 FILE No. 2\proj\pompano\str\pbwrc2s05.dgn PLOT DATE: 06-NOV-1997 TIME: 13:14

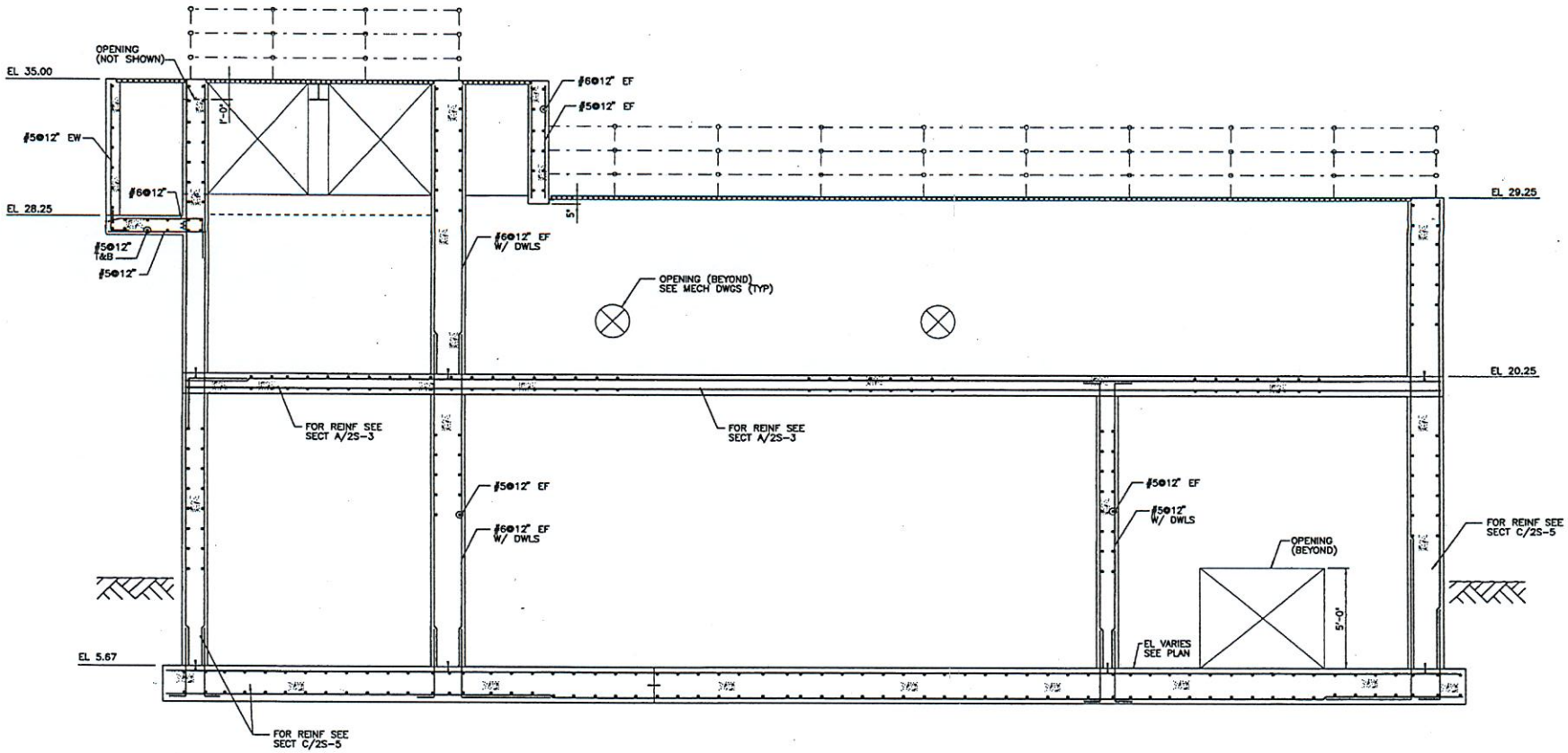

SECTION D
3/8" = 1'-0" 2S-1 2S-2

STRUCTURAL ENGINEER LICENSE NO. DATE

REV	DATE	BY	DESCRIPTION

SCALE: 3/8" = 1'-0"

WARNING 0 1/2 1
IF THIS BAR DOES NOT MEASURE 1" THEN DRAWING IS NOT TO SCALE

DESIGNED A BACHTIAR
DRAWN A BACHTIAR
CHECKED

SUBMITTED
PROJECT MANAGER LICENSE NO. DATE
RECOMMENDED
MONTGOMERY WATSON LICENSE NO. DATE

MONTGOMERY WATSON
Ft. Lauderdale, Florida

City of Pompano Beach, Florida
Water Resource Center
Treated Wastewater Effluent
Irrigation Facility Expansion

TREATED WASTEWATER EFFLUENT
IRRIGATION FACILITY EXPANSION

FILTER BASIN
SECTION – IV

SHEET 2S-6

JOB No. 166.021801 FILE No. s:\proj\pompano\str\pbsvrc2s08.dgn PLOT DATE: 06-NOV-1999 TIME: 11:20

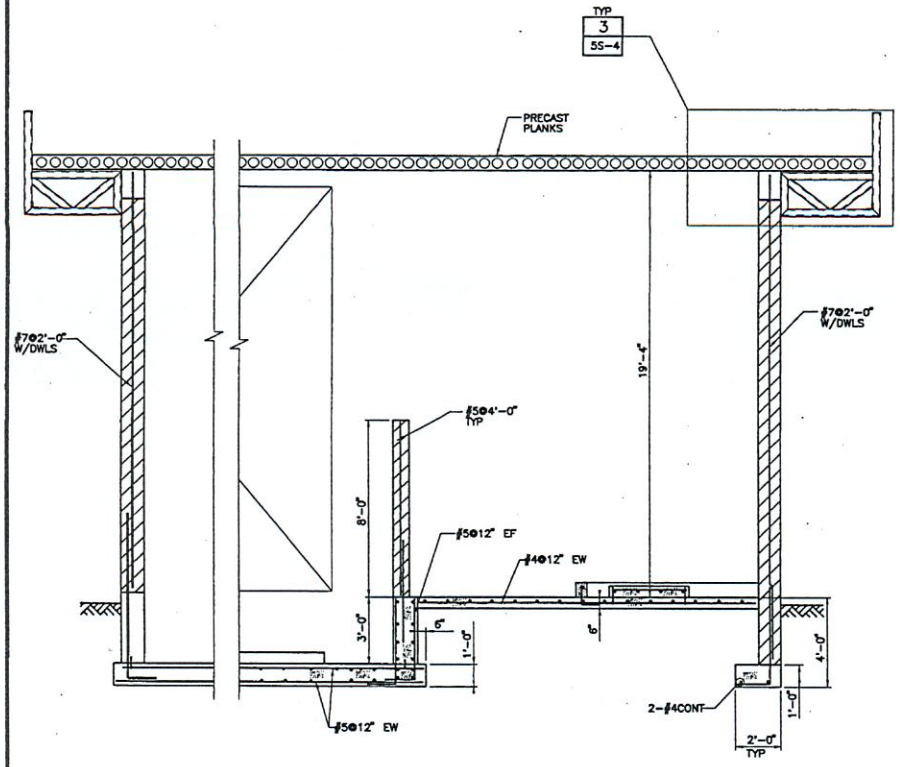

SECTION A
3/8" = 1'-0" 5S-1

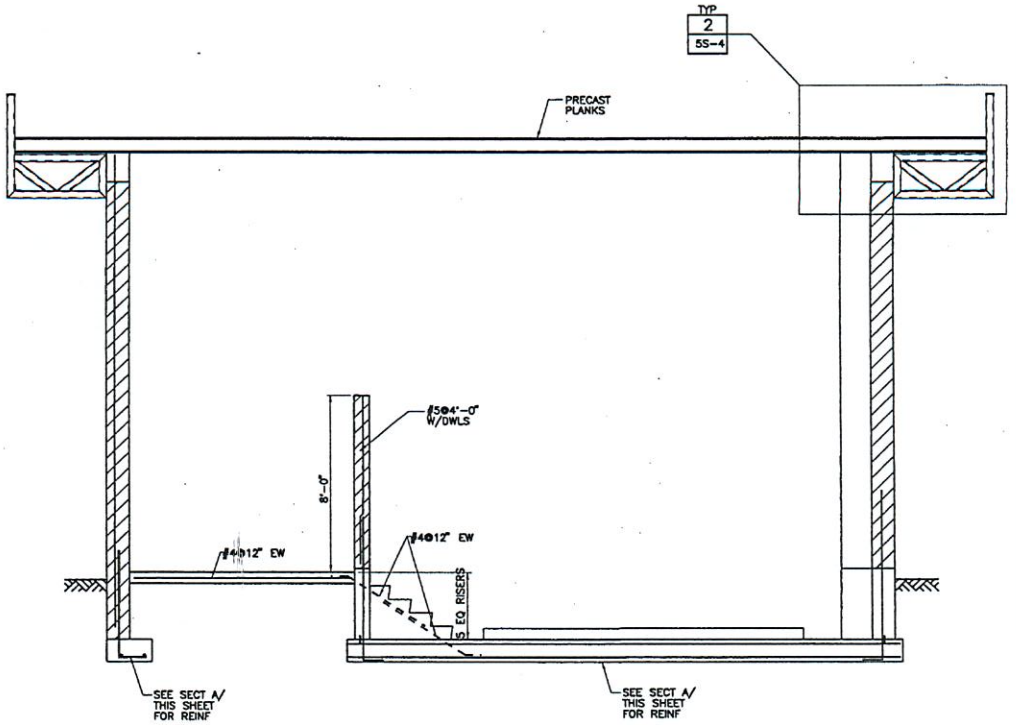

SECTION B
3/8" = 1'-0" 5S-1

STRUCTURAL ENGINEER LICENSE NO. DATE

REV	DATE	BY	DESCRIPTION

SCALE: AS NOTED

WARNING 0 1/2 1 IF THIS BAR DOES NOT MEASURE 1" THEN DRAWING IS NOT TO SCALE.

DESIGNED I. GONZALEZ
DRAWN J. ZARAGOZA
CHECKED

SUBMITTED
PROJECT MANAGER LICENSE NO. DATE
RECOMMENDED
MONTGOMERY WATSON LICENSE NO. DATE

MONTGOMERY WATSON
Ft. Lauderdale, Florida

City of Pompano Beach, Florida
Water Resource Center
Treated Wastewater Effluent
Irrigation Facility Expansion

TREATED WASTEWATER EFFLUENT IRRIGATION FACILITY EXPANSION
CHEMICAL BUILDING SECTIONS

SHEET 5S-3

JOB No. 166.021801 FILE No. g:\proj\pompano\str\pbwrc5s03.dgn PLOT DATE: 08-NOV-1999 TIME: 10:22

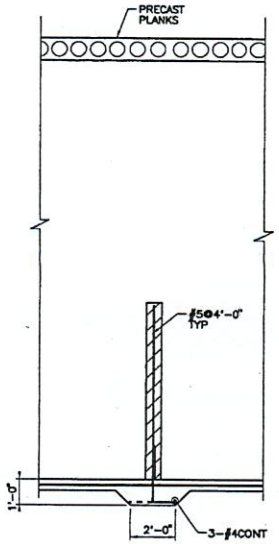

SECTION C
3/8" =1'-0" 5S-1 5S-2

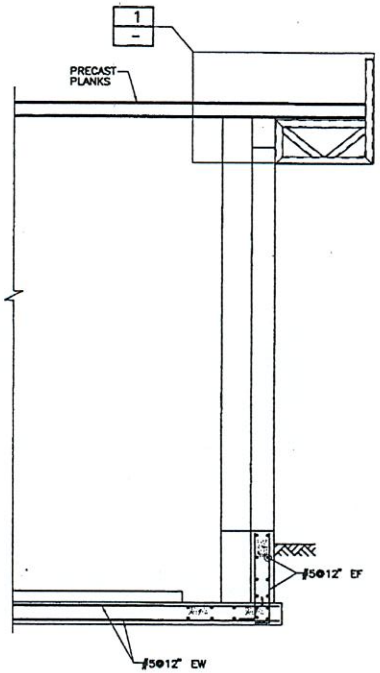

SECTION D
3/8" =1'-0" 5S-1 5S-2

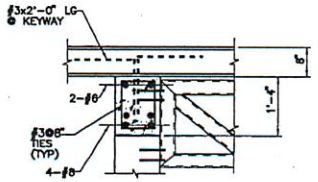

DETAIL 1
3/4" =1'-0" -

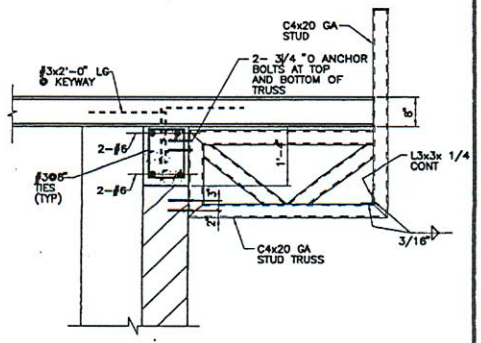

DETAIL 2
3/4" =1'-0" 5S-3

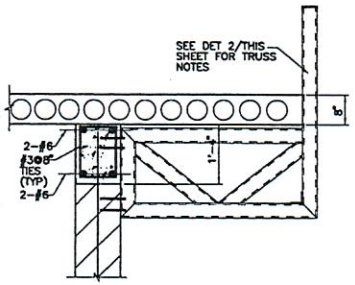

DETAIL 3
3/4" =1'-0" 5S-3

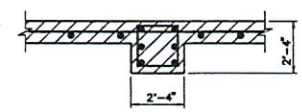

DETAIL 4
3/4" =1'-0" 5S-1

STRUCTURAL ENGINEER LICENSE NO. DATE

REV	DATE	BY	DESCRIPTION

SCALE: AS NOTED

WARNING 0 1/2 1 IF THIS BAR DOES NOT MEASURE 1" THEN DRAWING IS NOT TO SCALE.

DESIGNED I. GONZALEZ
DRAWN J. ZARAGOZA
CHECKED

SUBMITTED
PROJECT MANAGER LICENSE NO. DATE
RECOMMENDED
MONTGOMERY WATSON LICENSE NO. DATE

MONTGOMERY WATSON
Ft. Lauderdale, Florida

City of Pompano Beach, Florida
Water Resource Center
Treated Wastewater Effluent
Irrigation Facility Expansion

TREATED WASTEWATER EFFLUENT IRRIGATION FACILITY EXPANSION
CHEMICAL BUILDING SECTIONS AND DETAILS

SHEET 5S-4

JOB No. 166.021801 FILE No. g:\proj\pompano\etr\pbwrc5s04.dgn PLOT DATE: 08-NOV-1999 TIME: 10:07

INTERIOR FINISH SCHEDULE

BLDG	SPACE		FLOOR			BASE AND WAINSCOT					NORTH WALL			SOUTH WALL			EAST WALL			WEST WALL			CEILING				MISCELLANEOUS				REMARKS
	NO	DESCRIPTION	SUB FL	FINISH	COLOR	HEIGHT	MATL	FINISH	COLOR	WALLS	MATL	FINISH	COLOR	MATL	FINISH	COLOR	MATL	FINISH	COLOR	MATL	FINISH	COLOR	HEIGHT	MATL	FINISH	COLOR	ITEM	MATERIAL	FINISH	COLOR	
CONTROL BUILDING	C-1	CONTROL ROOM	CONC	EPOXY	A	4"	VINYL	-	B	ALL	GWB	115	D	GWB	115	D	GWB	115	D	GWB	115	D	9'-0"	SATC	-	N	WINDOW STOOLS	PLAS LAM	-	L	
CONTROL BUILDING	C-2	MOTOR CONTROL CENTER	CONC	EPOXY	A	4"	VINYL	-	B	ALL	CMU	109	D	CMU	109	D	CMU	115	D	GWB	115	D	VARIES	SGWB	115	D	-	-	-	-	
CONTROL BUILDING	C-3	POLYMER FEED	CONC	EPOXY	A	4"	VINYL	-	B	ALL	CMU	23	D	CMU	23	D	CMU	23	D	CMU	23	D	VARIES	SGWB	115	D	-	-	-	-	
CONTROL BUILDING	C-4	CHEMICAL STORAGE	CONC	EPOXY	A	-	-	-	-	ALL	CMU	23	D	CMU	23	D	CMU	23	D	CMU	23	D	VARIES	SGWB	115	D	-	-	-	-	
CONTROL BUILDING	C-5	WALKWAY	CONC	EPOXY	A	4"	VINYL	-	B	ALL	CMU	109	D	CMU	109	D	CMU	109	D	CMU	109	D	9'-0"	SATC	-	N	-	-	-	-	
CONTROL BUILDING	C-6	LABORATORY	CONC	EPOXY	A	4"	VINYL	-		ALL	GWB	115	D	GWB	115	D	GWB	115	D	GWB	115	D	9'-0"	SATC	-	N	WINDOW STOOLS	PLAS LAM	-	L	
CONTROL BUILDING	C-7	RESTROOM	CONC	EPOXY	A		VINYL	23		ALL	CMU	110	D	CMU	110	D	GWB	116	D	CMU	110	D	8'-0"	SGWB	115	D	-	-	-	-	
CONTROL BUILDING	C-8	UTILITY CLOSET	CONC	EPOXY	A	4"	VINYL	-	B	ALL	CMU	109	D	CMU	109	D	CMU	109	D	CMU	109	D	9'-0"	SGWB	115	D	-	-	-	-	
CONTROL BUILDING	C-9	STORAGE ROOM	CONC	SEALER	C	-	-	-	-	ALL	CMU	109	D	CMU	109	D	CMU	109	D	CMU	109	D	9'-0"	SGWB	115	D	-	-	-	-	
CONTROL BUILDING	C-10	COMPRESSOR ROOM	CONC	EPOXY	A	-	-	-	-	ALL	CMU	109	D	CMU	109	D	CMU	109	B	CMU	109	D	VARIES	SGWB	115	D	-	-	-	-	BLOCK WALLS FILLED WITH SAND
CONTROL BUILDING	C-11	CHEMICAL FEED	CONC	EPOXY	A	4"	VINYL	-	B	ALL	CMU	23	D	CMU	23	D	CMU	23	B	CMU	23	D	9'-0"	SGWB	115	D	-	-	-	-	

COLOR SCHEDULE

DESIG	COLOR
A	POLYMER PLASTICS, 02-29 & 02-86
B	FLEX COVE NO. 6
C	CLEAR
D	PORTER SOFT BEIGE, 5046P
E	PORTER PARCHMENT, 5044P
F	PORTER GRAY BEIGE, 5036P
G	CLEAR ANODIZED
H	BLACK
I	PORTER MEDIUM BLUE
J	
K	
L	SUEDE BROWN
M	MANUFACTURER'S STANDARD WHITE

EXTERIOR FINISH SCHEDULE

LOCATION	DESCRIPTION	SYSTEM	COLOR
EXPOSED STUCCO SURFACES OF FASCIA AND SOFFIT ON CONTROL BUILDING, STUCCO SURFACES OF RING ON GROUND STORAGE TANK AND TANK ROOF	SMOOTH STUCCO	111	E
EXPOSED STUCCO SURFACES OF CONTROL BUILDING WALLS	ROUGH SPRAY STUCCO	111	F
EXPOSED SURFACES OF WATER CONTAINING STRUCTURES AND RETAINING WALLS	ROUGH CEMENTITIOUS SPRAY APPLIED COATING	111, 122 123	F
INTERIOR FILTER WALLS BELOW ELEVATION 18.00	PAINT	2	H
INTERIOR FILTER WALLS ABOVE ELEVATION 18.00	PAINT	3	I
INTERIOR TRANSFER PUMP STA WALLS	PAINT	3	H
INTERIOR FILTER REJECT SUMP WALLS	PAINT	2	H
ALL EXPOSED MISCELLANEOUS METALS AND EQUIPMENT	PAINT	5	E

ECKLER ENGINEERING

SEAL

CONSULTANT

DSGN OAE | DR LHF | CH DAE | APVD DAE

VERIFY SCALE

BAR IS ONE INCH ON ORIGINAL DRAWING. IF NOT, SCALES AS NECESSARY.

NO	DATE	REVISIONS	BY	APVD

CITY OF POMPANO BEACH
EFFLUENT IRRIGATION FACILITY

INTERIOR FINISH SCHEDULE

SHT 22 OF 81
DWG NO A-7
PROJ NO 300.01
DATE APR 22, 1988