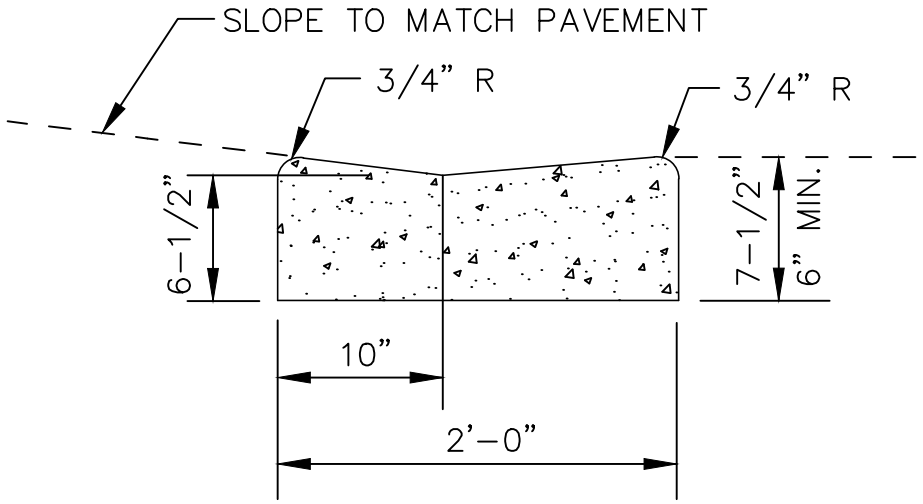

DROP CURB

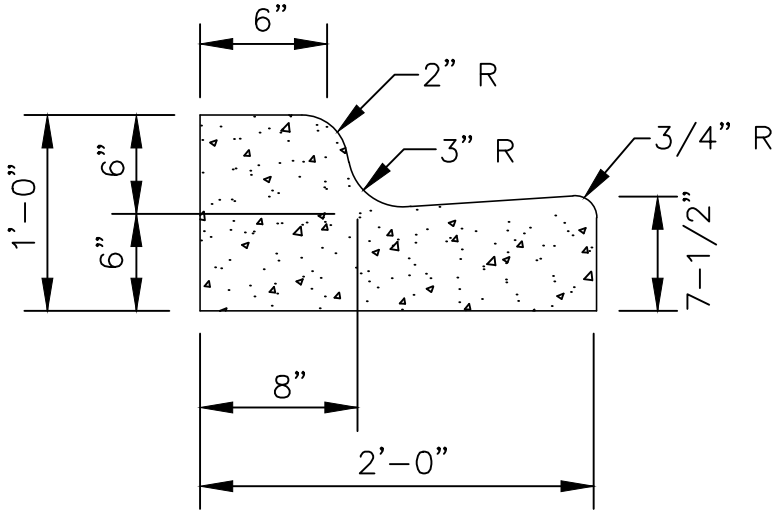

TYPE "F" CURB & GUTTER

CONCRETE CURB AND GUTTER DETAIL

ENGINEERING STANDARDS 2016

REVISIONS		ENGINEERING DIVISION CITY OF POMPANO BEACH	CONCRETE CURB AND GUTTER	
BY	DATE			DATE: JUNE 1996 DWG. NO.
		SCALE: N.T.S.		300-1

J:\City-STANDARDS\2016 Standards Details\Misc. 3-1.dwg, 11/5/2015 10:10:13 AM

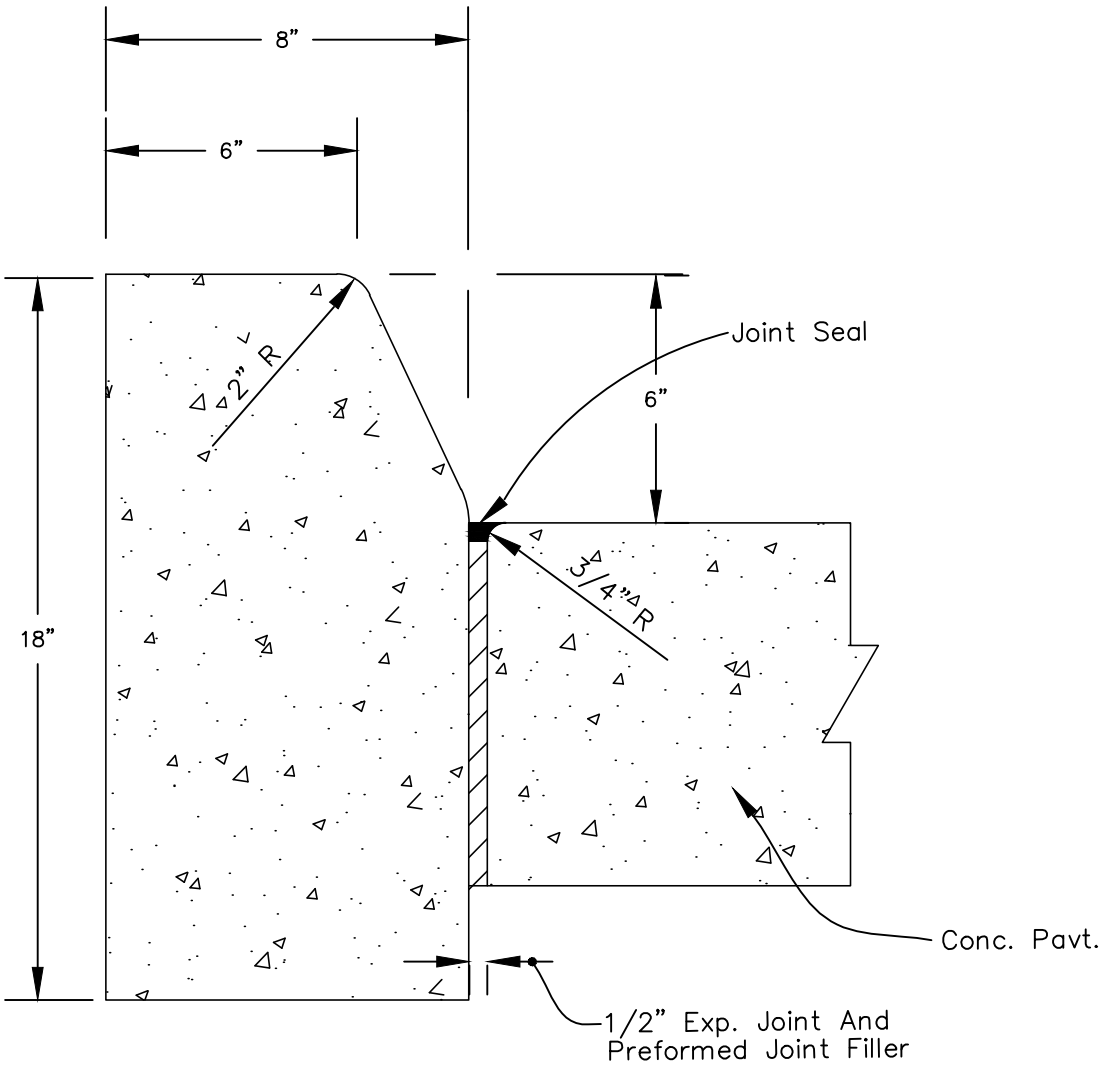

TYPE "D" CURB

NOTE

FOR USE ADJACENT TO CONCRETE OR FLEXIBLE PAVEMENT, CONCRETE SHOWN. EXPANSION JOINT, PREFORMED JOINT FILLER AND JOINT SEAL ARE REQUIRED BETWEEN CURBS AND CONCRETE PAVEMENT ONLY.

CONCRETE CURB DETAIL

ENGINEERING STANDARDS 2016

REVISIONS	
BY	DATE
S.S.	01-2014
S.S.	08-2015

ENGINEERING DIVISION
CITY OF POMPANO BEACH

SCALE: N.T.S.

CONCRETE CURB

DATE: January 2000
DWG. NO.
300-2

J:\City-STANDARDS\2016 Standards Details\Misc. 3-1.dwg, 11/5/2015 10:10:44 AM

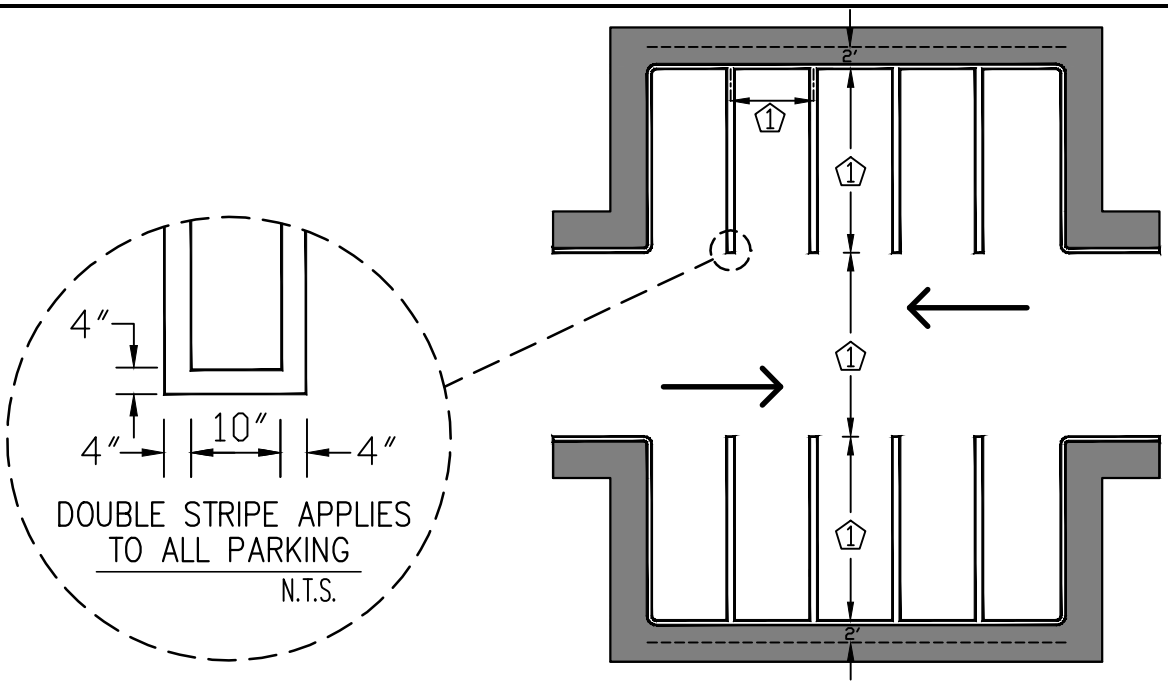

90° PARKING PLAN

N.T.S.

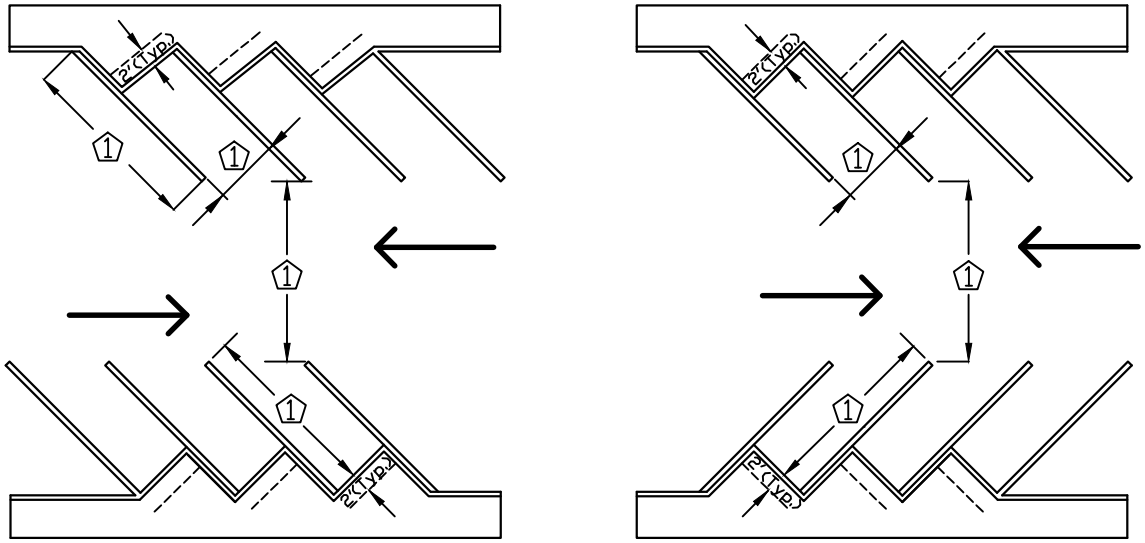

ANGLED PARKING PLAN

N.T.S.

NOTES

1. INDICATED DIMENSION BY LOCAL ZONING ORDINANCE.
2. CURBING APPLIES TO ALL PARKING.
3. EACH SPACE SHALL BE DESIGNATED BY FOUR 4 INCH WIDE VISIBLE STRIPING CONSISTING OF WHITE PAINT OR AS APPROVED BY THE CITY.

ENGINEERING STANDARDS 2016

REVISIONS		ENGINEERING DIVISION CITY OF POMPANO BEACH	STANDARD PARKING SPACES
BY	DATE		DATE: December 2014 DWG. NO. 300-3
		SCALE: N.T.S.	

J:\City-STANDARDS\2016 Standards Details\Misc. 3-1.dwg, 11/5/2015 10:14:14 AM

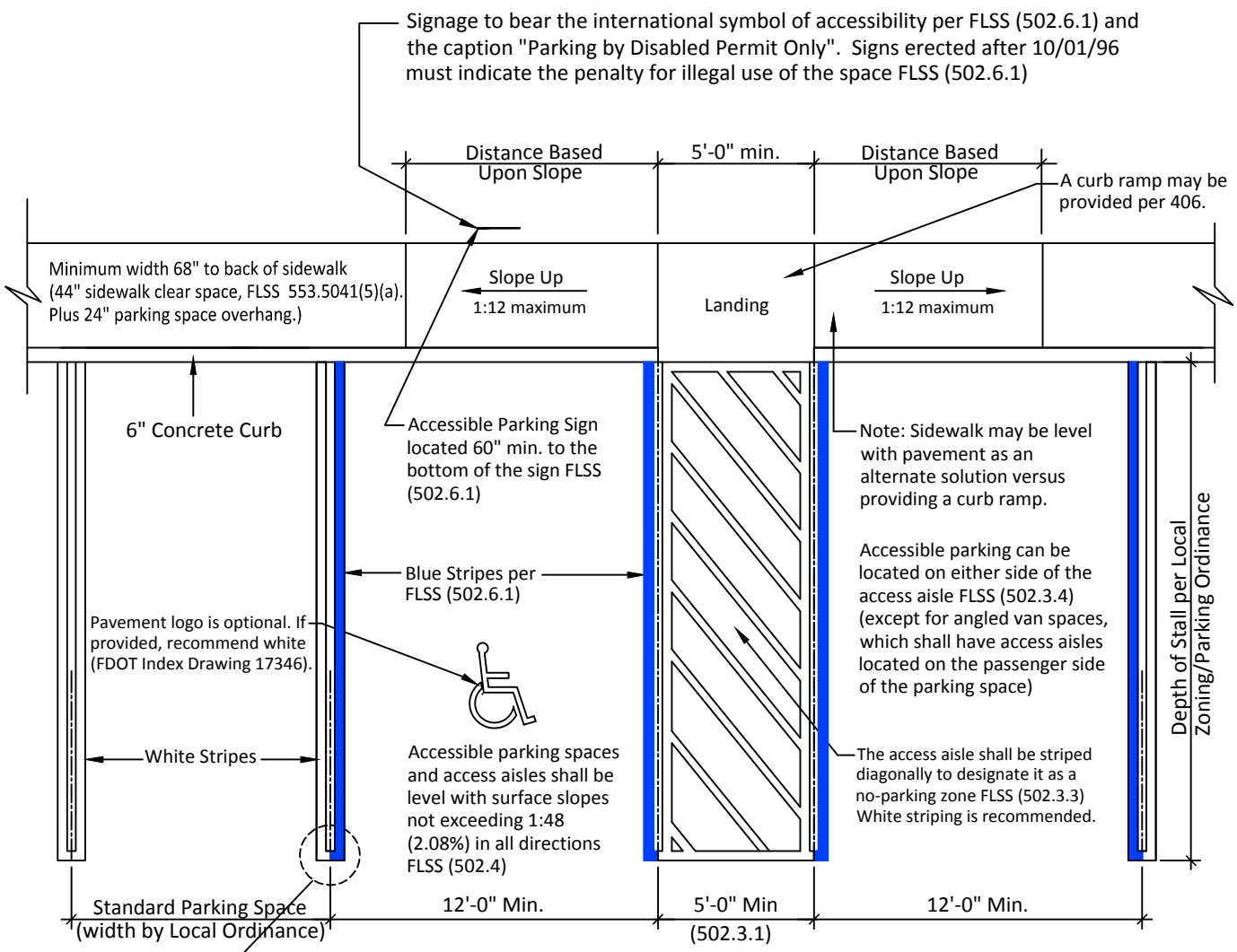

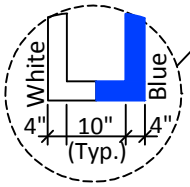

FLSS (553.5041)(5)(a) All spaces must be located on an accessible route no less than 44 inches wide so that users will not be compelled to walk or wheel behind parked cars except behind his or her own vehicle. (See FLSS 553.5041(5)(e)(1) relating to existing parking facilities)

Recommended Accessible Parking Space(s) Design for Double Line Requirements

N.T.S.

THIS TECHNICAL ASSISTANCE DOCUMENT IS INTENDED TO PROVIDE INFORMAL GUIDANCE AND DOES NOT CONSTITUTE A LEGAL INTERPRETATION OF STATUTORY OR REGULATORY CRITERIA.

ENGINEERING STANDARDS 2016

REVISIONS		ENGINEERING DIVISION CITY OF POMPANO BEACH	ACCESSIBLE PARKING SPACES	
BY	DATE			DATE: December 2014
				DWG. NO.
		SCALE: N.T.S.		300-4

J:\City-STANDARDS\2016 Standards Details\Misc. 3-1.dwg, 11/5/2015 10:47:06 AM

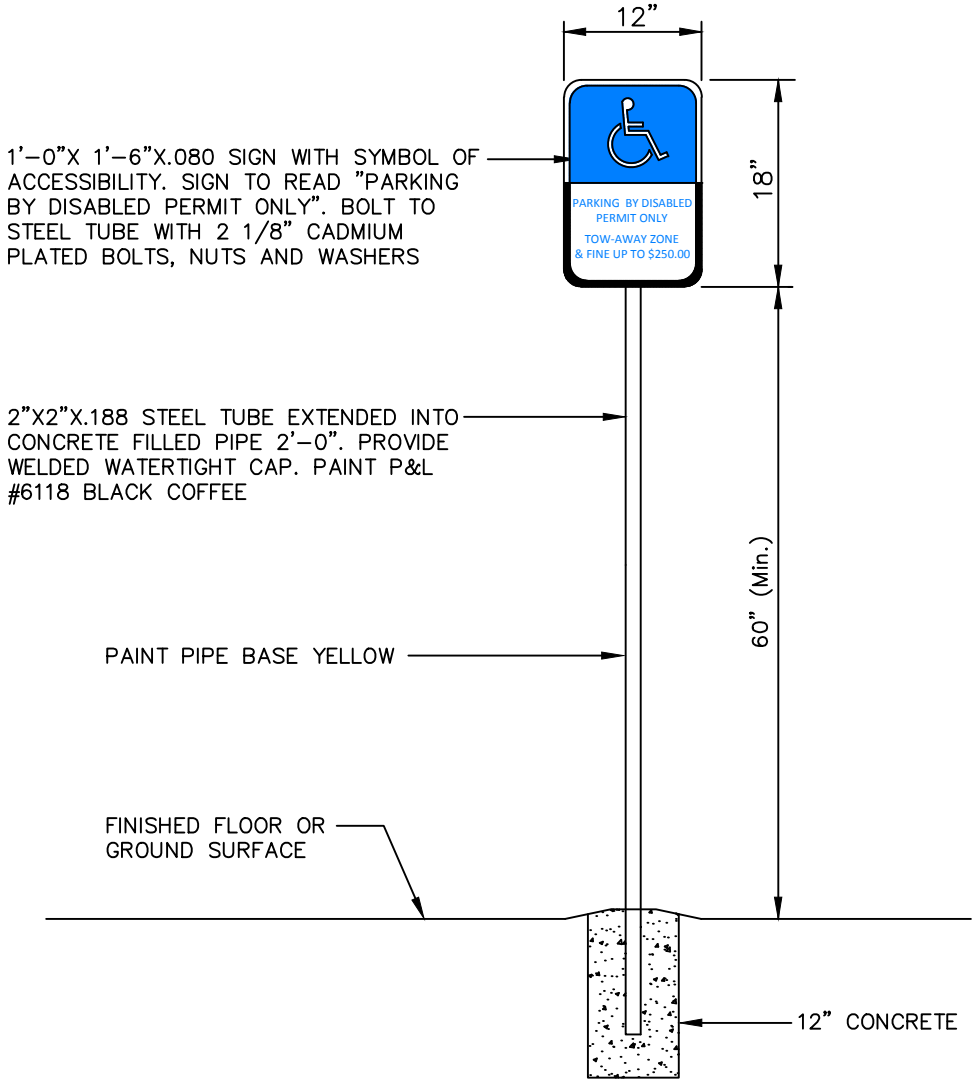

ACCESSIBLE PARKING SPACE SIGN

N.T.S.

SIGN NOTE

ACCESSIBLE PARKING SPACES SHALL BE POSTED WITH A FIXED PARKING SIGN NO LESS THAN 60" Min. TO THE BOTTOM OF THE SIGN AND WHICH BEARS THE INTERNATIONAL SYMBOL OF ACCESSIBILITY MEETING THE REQUIREMENTS OF THE STANDARDS AND THE CAPTION "PARKING BY DISABLED PERMIT ONLY." AND MUST INDICATE THE PENALTY FOR ILLEGAL USE OF THE SPACE.

ENGINEERING STANDARDS 2016

REVISIONS		ENGINEERING DIVISION CITY OF POMPANO BEACH	ACCESSIBLE SPACE SIGN	
BY	DATE			DATE: December 2014
				DWG. NO.
		SCALE: N.T.S.		300-5

J:\City-STANDARDS\2016 Standards Details\Misc. 3-1.dwg, 11/5/2015 10:52:18 AM

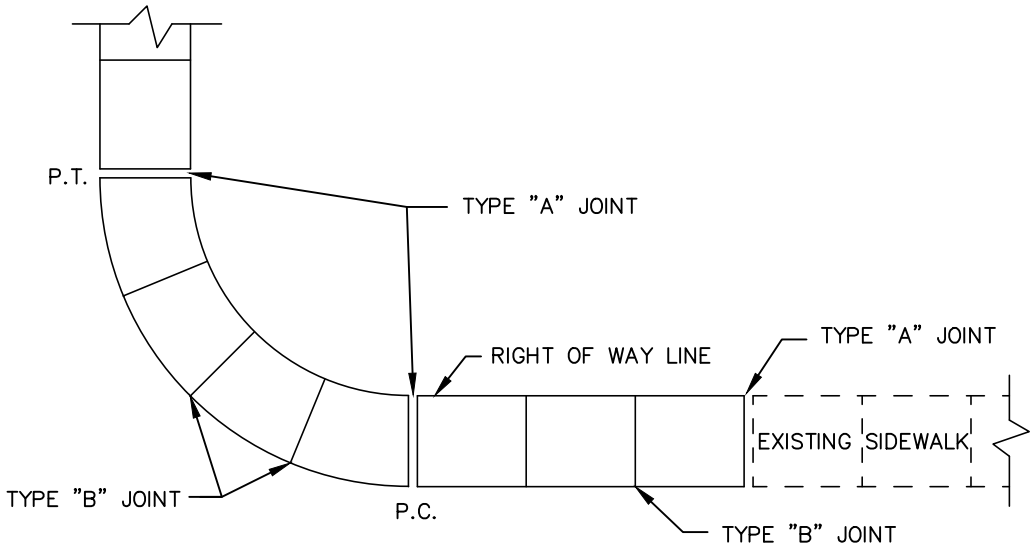

PLAN

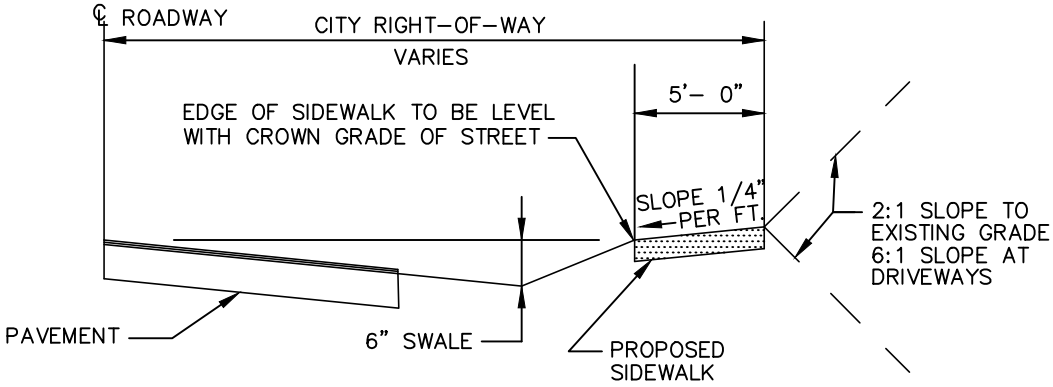

TYPICAL SIDEWALK SECTION

SIDEWALK DETAILS

ENGINEERING STANDARDS 2016

REVISIONS		ENGINEERING DIVISION CITY OF POMPANO BEACH	SIDEWALK DETAILS	
BY	DATE			DATE: JUNE 2005
				DWG. NO.
		SCALE: N.T.S.		301-1

J:\City-STANDARDS\2016 Standards Details\Misc. 3-1.dwg, 11/5/2015 10:53:10 AM

TABLE OF SIDEWALK JOINTS	
TYPE	LOCATION
"A"	JOINT SHALL BE PLACED AT P.C. AND P.T. OF CURVES, JUNCTION OF EXISTING SIDEWALKS, EVERY 60' ON NEW SIDEWALKS AND WHERE SIDEWALKS ABUT CONCRETE CURBS, DRIVEWAYS AND SIMILAR STRUCTURES.
"B"	JOINT SHALL BE PLACED 5'-0" CENTER
"C"	JOINT SHALL BE PLACED AT 20' INTERVALS

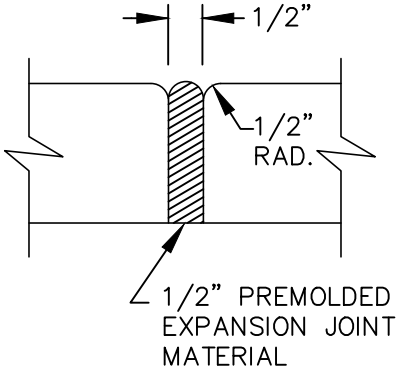

TYPE "A" JOINT

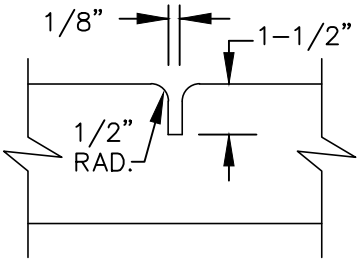

TYPE "B" JOINT

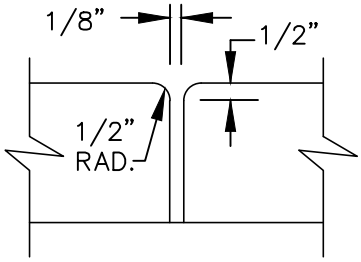

TYPE "C" JOINT

NOTE: SIDEWALK SHALL BE 4" THICK EXCEPT IN DRIVEWAYS WHERE THE THICKNESS SHALL BE 6".

SIDEWALK DETAILS

ENGINEERING STANDARDS 2016

REVISIONS		ENGINEERING DIVISION CITY OF POMPANO BEACH	SIDEWALK DETAILS	
BY	DATE			DATE: JUNE 2005 DWG. NO.
		SCALE: N.T.S.		301-2

J:\City-STANDARDS\2016 Standards Details\Misc. 3-1.dwg, 11/5/2015 10:53:46 AM

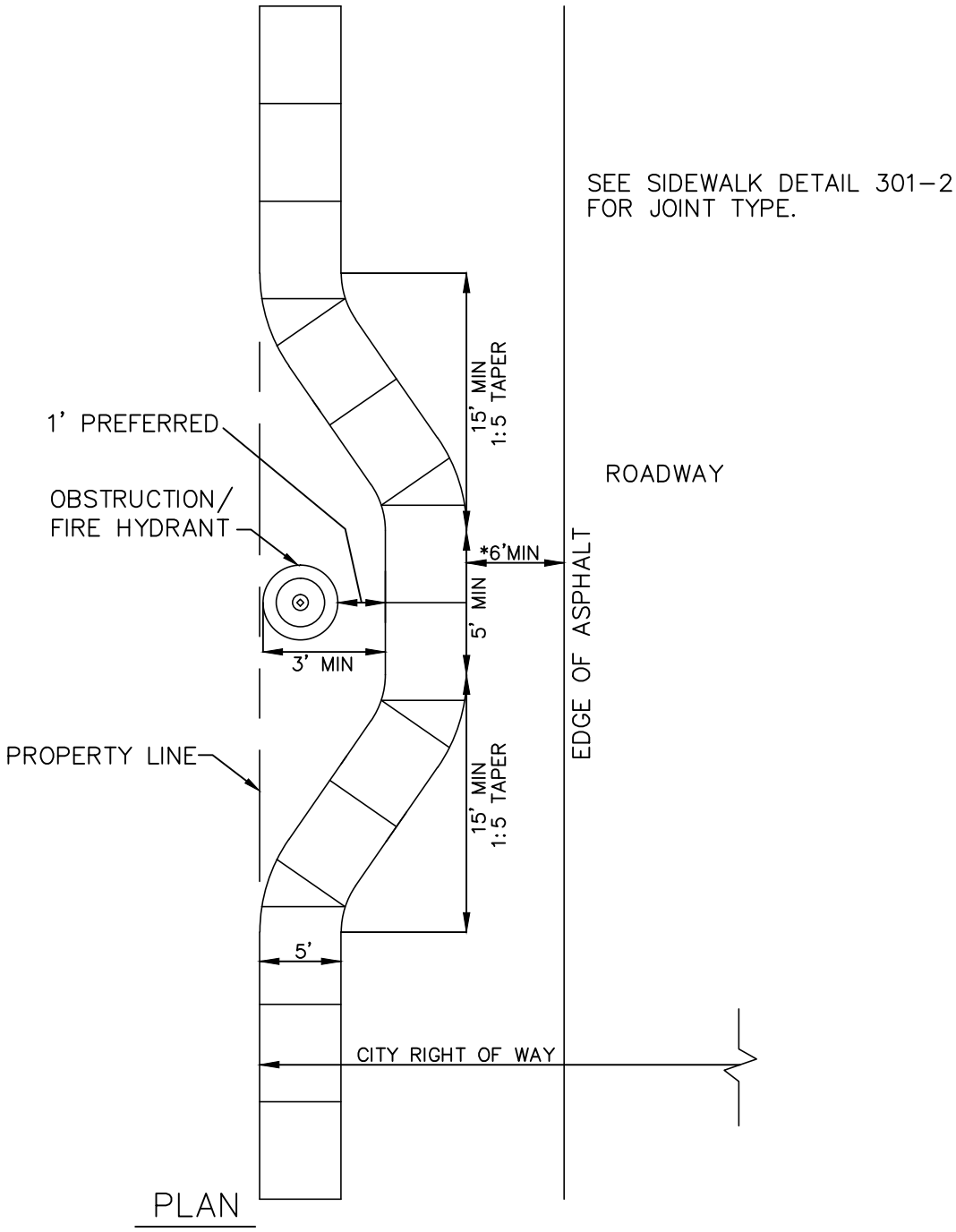

SIDEWALK OBSTRUCTION

* IF 6' DISTANCE CANNOT BE OBTAINED
PROVIDE CURBING.

ENGINEERING STANDARDS 2016

REVISIONS	
BY	DATE
T.W.	1-2008

ENGINEERING DIVISION
CITY OF POMPANO BEACH

SCALE: N.T.S.

SIDEWALK OBSTRUCTION

DATE: JUNE 2005
DWG. NO.
301-3

J:\City-STANDARDS\2016 Standards Details\Misc. 3-1.dwg, 11/5/2015 10:54:20 AM

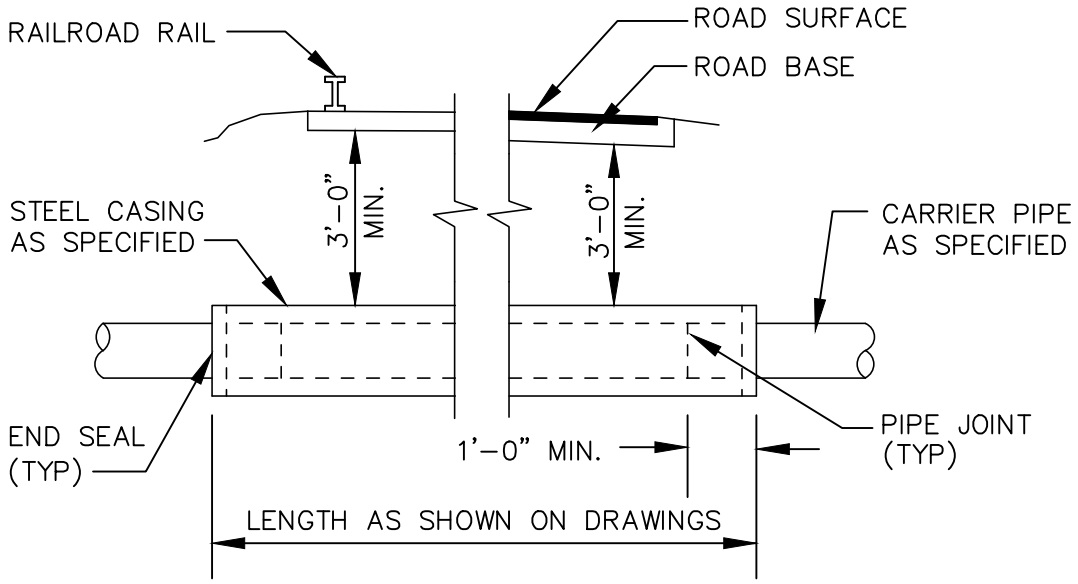

PROFILE

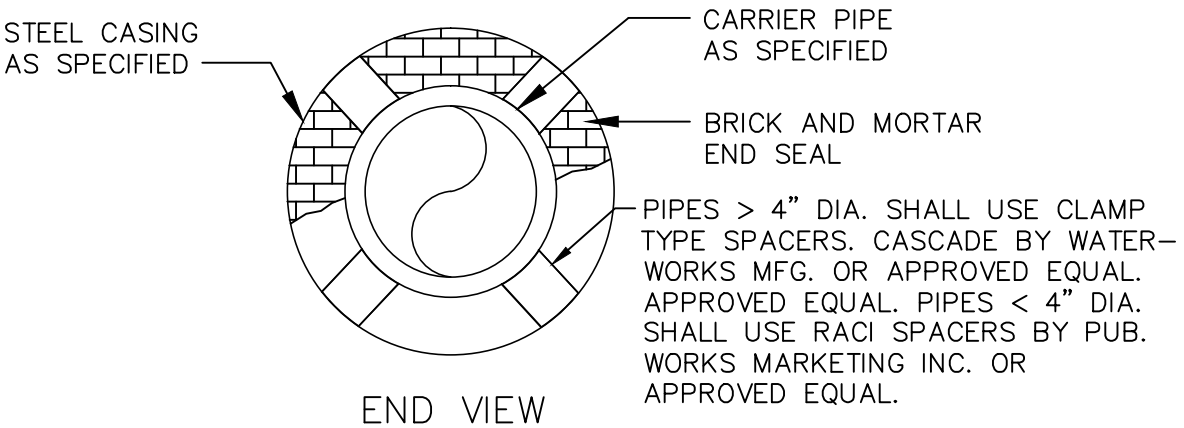

END VIEW

* 4" WIDE x DEPTH TO PROVIDE MINIMUM 1" CLEARANCE BELL PIPE TO CASING. LENGTH TO BE 2'-0" SHORTER THAN EACH LENGTH OF PIPE.

UNDERCROSSING DETAIL

ENGINEERING STANDARDS 2016

REVISIONS		ENGINEERING DIVISION CITY OF POMPANO BEACH	UNDERCROSSING DETAILS	
BY	DATE			
S.S.	JUNE 2005			DATE: JUNE 2005
				DWG. NO.
		SCALE: N.T.S.		302-1

J:\City-STANDARDS\2016 Standards Details\Misc. 3-1.dwg, 11/5/2015 10:54:48 AM

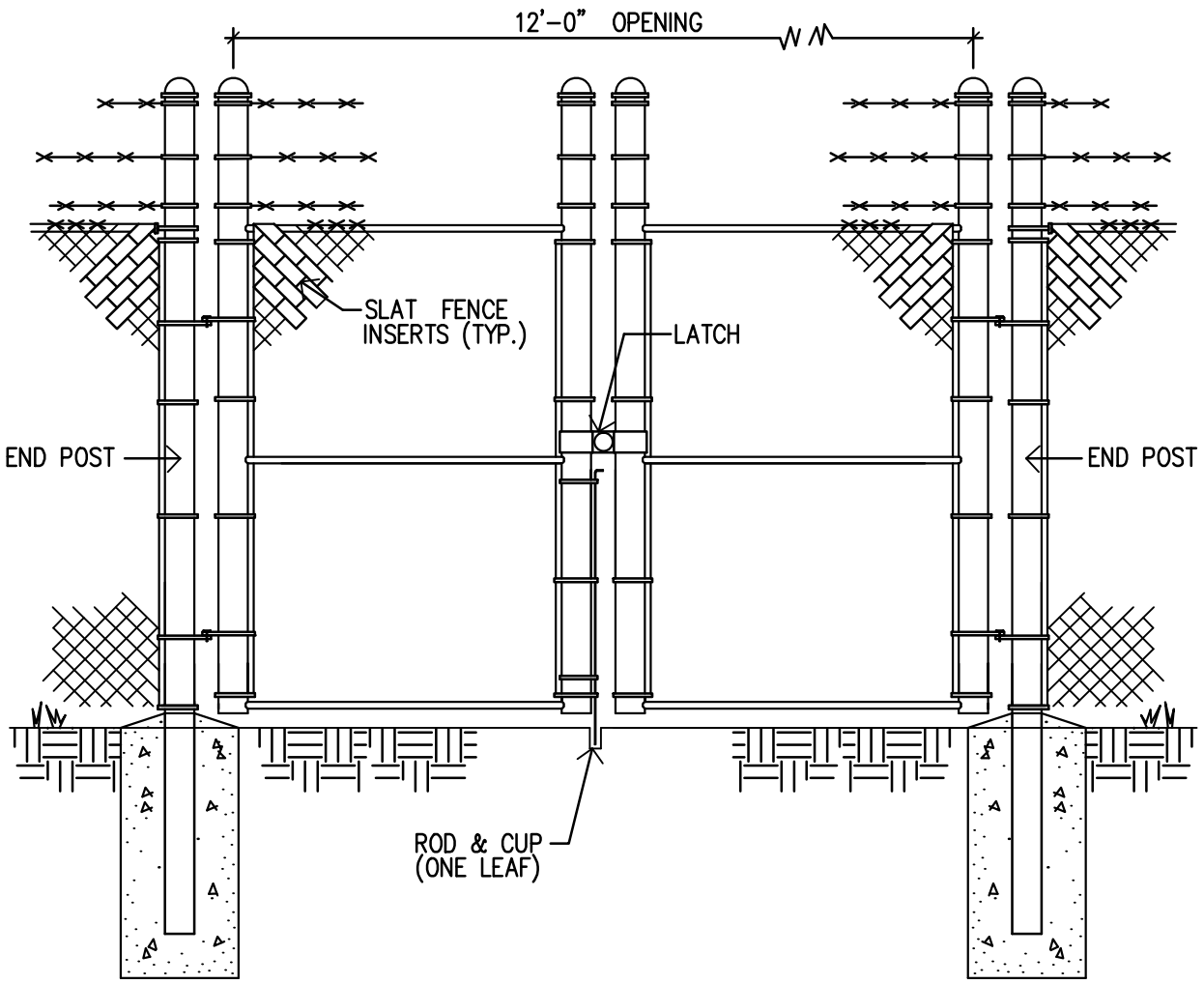

DOUBLE LEAF GATE

CHAIN LINK FENCE INSTALLATION DETAILS

ENGINEERING STANDARDS 2016

REVISIONS	
BY	DATE
S.S.	5-8-00

ENGINEERING DIVISION
CITY OF POMPANO BEACH

SCALE: N.T.S.

CHAIN LINK FENCE

DATE: MAY 2000
DWG. NO.
303-1

J:\City-STANDARDS\2016 Standards Details\Misc. 3-2.dwg, 11/5/2015 11:00:21 AM

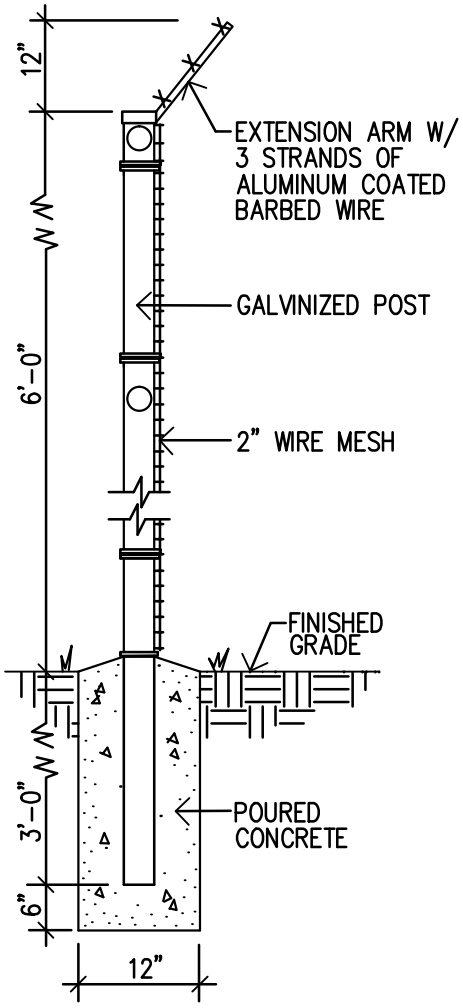

TYPICAL FENCE POST

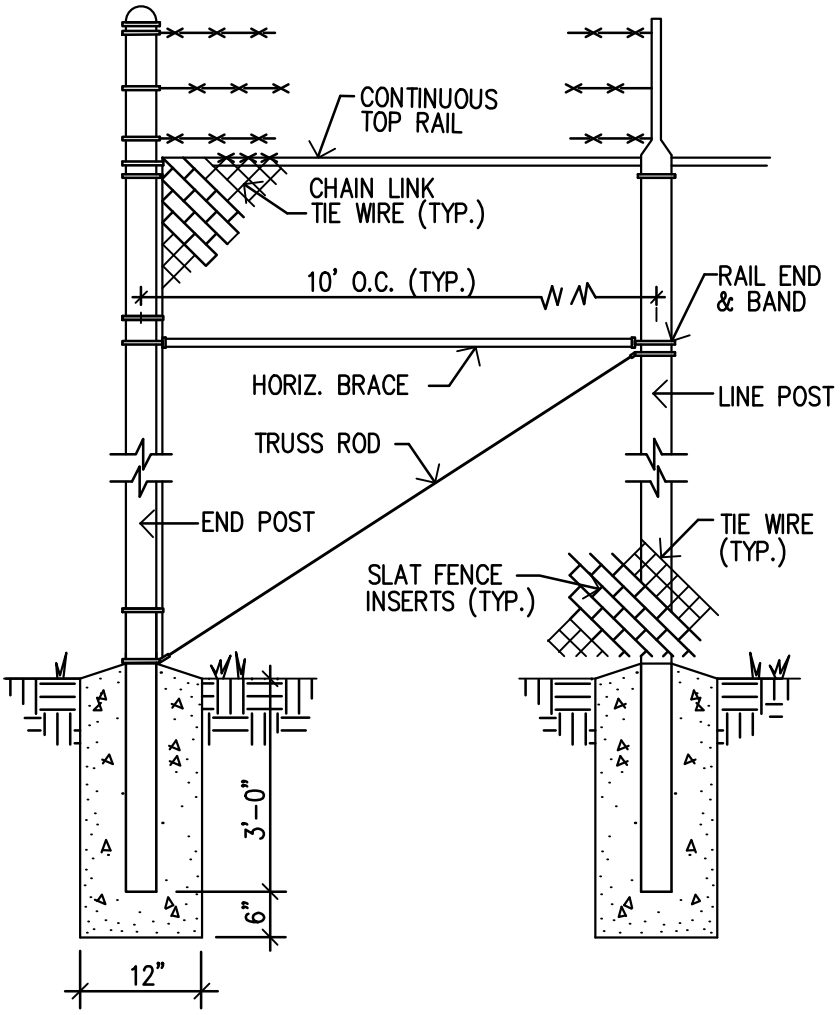

TYPICAL FENCE

CHAIN LINK FENCE INSTALLATION DETAILS

ENGINEERING STANDARDS 2016

REVISIONS	
BY	DATE
S.S.	5-4-00

ENGINEERING DIVISION
CITY OF POMPANO BEACH

SCALE: N.T.S.

CHAIN LINK FENCE

DATE: MAY 2000
DWG. NO.
303-2

J:\City-STANDARDS\2016 Standards Details\Misc. 3-2.dwg, 11/5/2015 11:01:02 AM

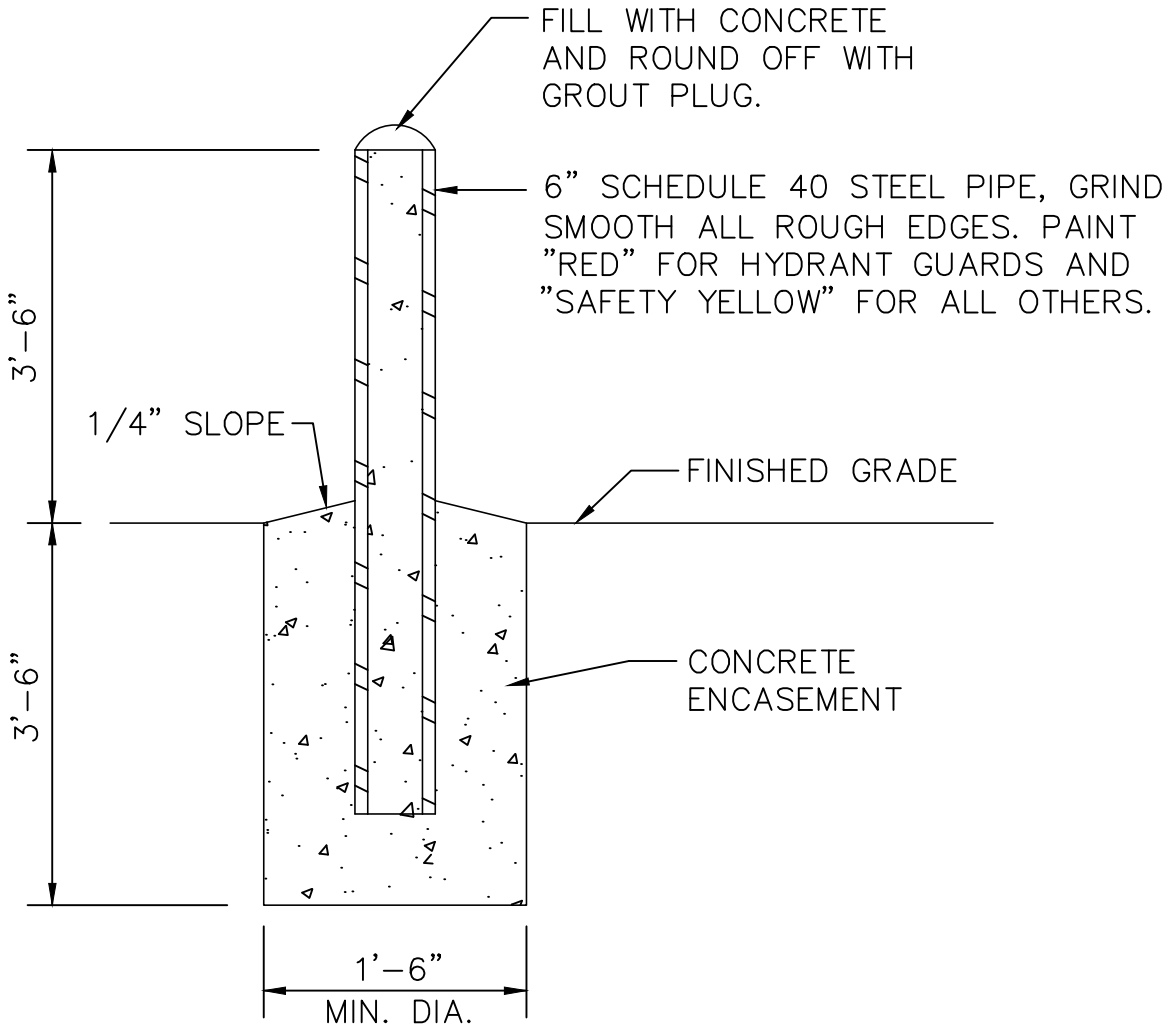

GUARD POST

ENGINEERING STANDARDS 2016

REVISIONS		ENGINEERING DIVISION CITY OF POMPANO BEACH	GUARD POST	
BY	DATE			DATE: JUNE 1996 DWG. NO.
		SCALE: N.T.S.		304-1

J:\City-STANDARDS\2016 Standards Details\Misc. 3-2.dwg, 11/5/2015 11:01:37 AM

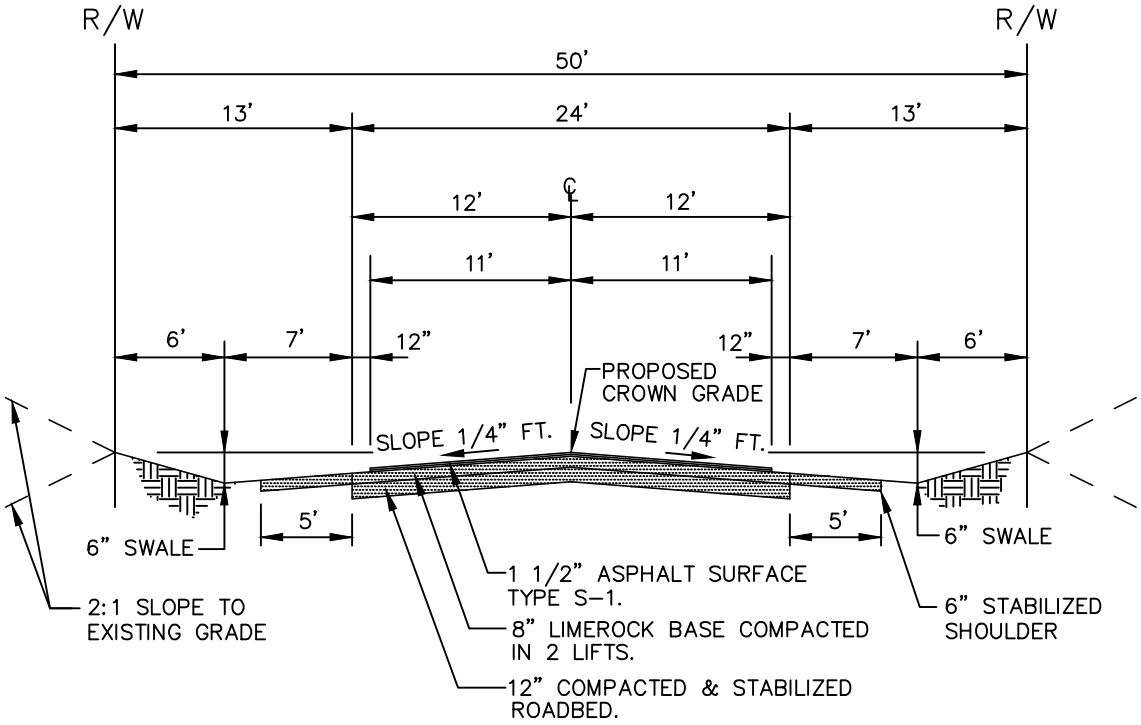

TYPICAL ROADWAY SECTION

ENGINEERING STANDARDS 2016

REVISIONS	
BY	DATE
S.S.	JUNE 2005

ENGINEERING DIVISION
CITY OF POMPANO BEACH

SCALE: N.T.S.

TYPICAL ROADWAY SECTION

DATE: JUNE 1996
DWG. NO. 305-1

J:\City-STANDARDS\2016 Standards Details\Misc. 3-2.dwg, 11/5/2015 11:01:58 AM

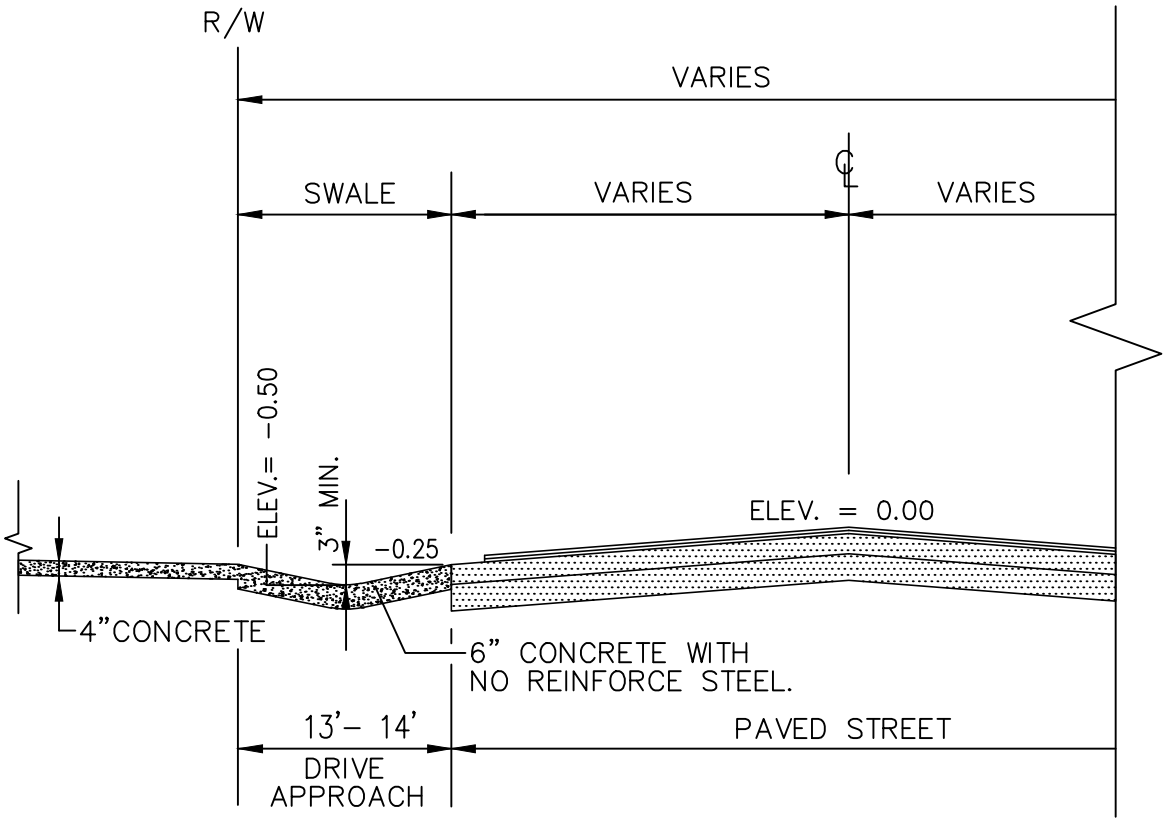

TYP. DRIVEWAY SWALE SECTION

ENGINEERING STANDARDS 2016

REVISIONS	
BY	DATE
S.S.	6/21/07

ENGINEERING DIVISION
CITY OF POMPANO BEACH

SCALE: N.T.S.

TYPICAL DRIVEWAY SWALE

DATE: JANUARY 2002
DWG. NO.
305-2

J:\City-STANDARDS\2016 Standards Details\Misc. 3-2.dwg, 11/5/2015 11:03:33 AM

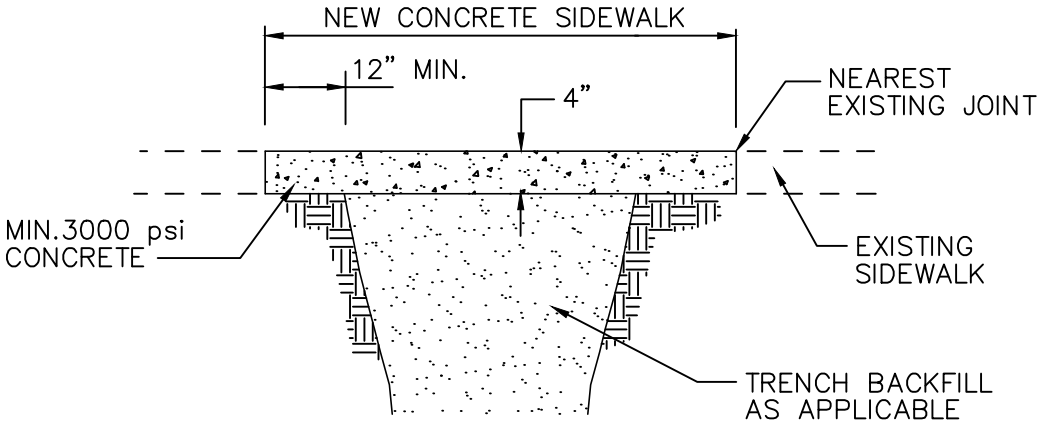

SIDEWALK
RESTORATION (TYPE II)

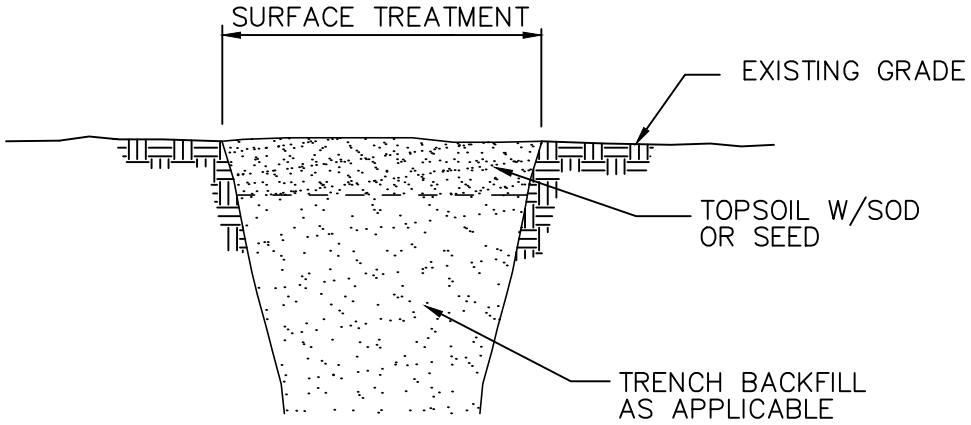

SWALE
RESTORATION (TYPE I)

SURFACE RESTORATION

ENGINEERING STANDARDS 2016

REVISIONS	
BY	DATE
S.S.	5/05/10

ENGINEERING DIVISION
CITY OF POMPANO BEACH

SCALE: N.T.S.

SURFACE RESTORATION

DATE: FEB. 1998
DWG. NO. 306-1

J:\City-STANDARDS\2016 Standards Details\Misc. 3-2.dwg, 11/5/2015 11:04:25 AM

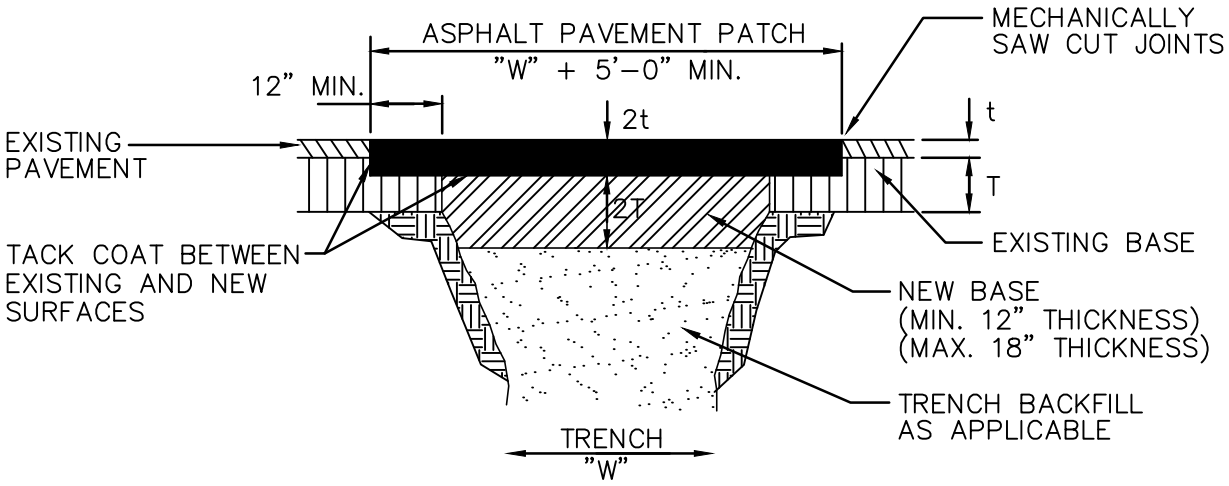

PERPENDICULAR ROAD CROSSINGS (TYPE III)

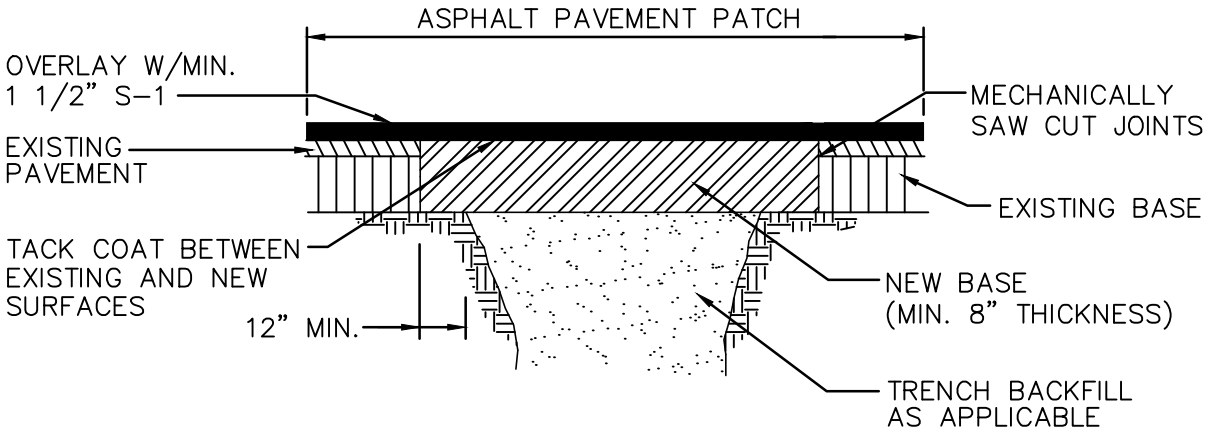

STANDARD PARALLEL ROAD RESTORATION (TYPE IV)

SURFACE RESTORATION

ENGINEERING STANDARDS 2016

REVISIONS		ENGINEERING DIVISION CITY OF POMPANO BEACH	SURFACE RESTORATION	
BY	DATE			DATE: FEB. 1998
				DWG. NO.
		SCALE: N.T.S.		306-2

J:\City-STANDARDS\2016 Standards Details\Misc. 3-2.dwg, 11/5/2015 11:04:51 AM

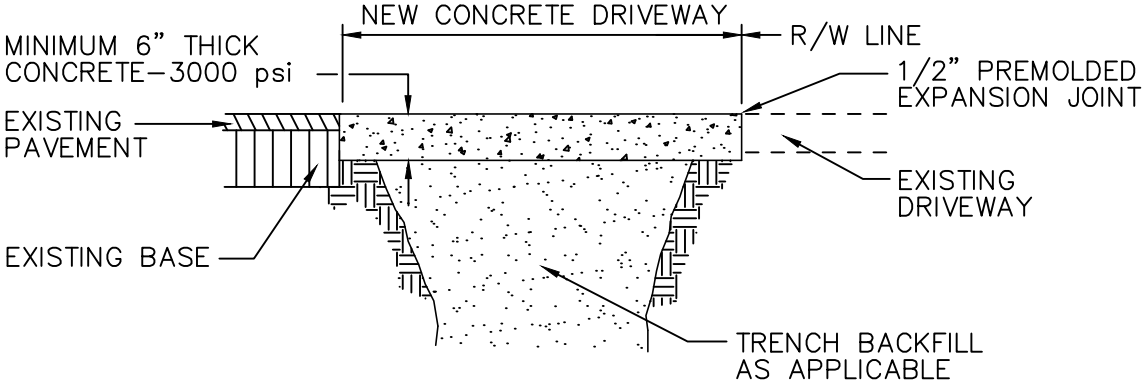

CONCRETE DRIVEWAY
RESTORATION (TYPE V)

SURFACE RESTORATION

ENGINEERING STANDARDS 2016

REVISIONS		ENGINEERING DIVISION CITY OF POMPANO BEACH	SURFACE RESTORATION	
BY	DATE			DATE: FEB. 1998
				DWG. NO.
		SCALE: N.T.S.		306-3

J:\City-STANDARDS\2016 Standards Details\Misc. 3-2.dwg, 11/5/2015 11:05:18 AM

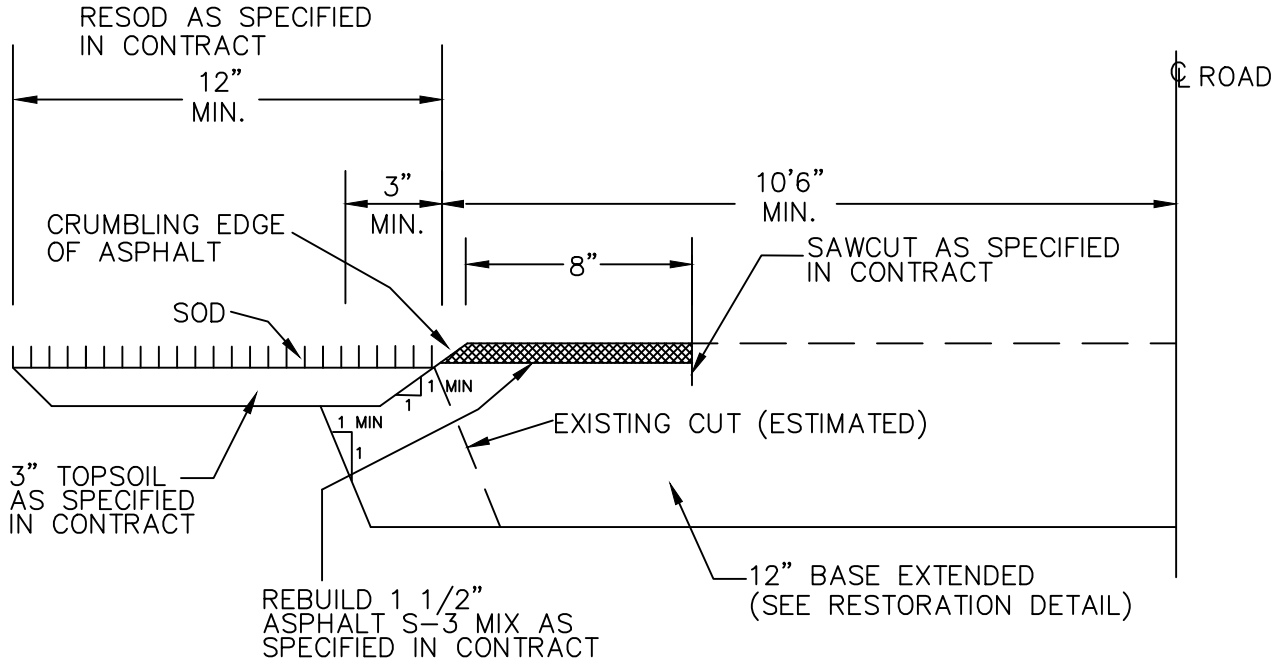

EDGE OF PAVEMENT RESTORATION

ENGINEERING STANDARDS 2016

REVISIONS		ENGINEERING DIVISION CITY OF POMPANO BEACH	EDGE OF PAVEMENT RESTORATION	
BY	DATE			DATE: FEB. 1998
				DWG. NO. 306-4
		SCALE: N.T.S.		

J:\City-STANDARDS\2016 Standards Details\Misc. 3-2.dwg, 11/5/2015 11:05:49 AM

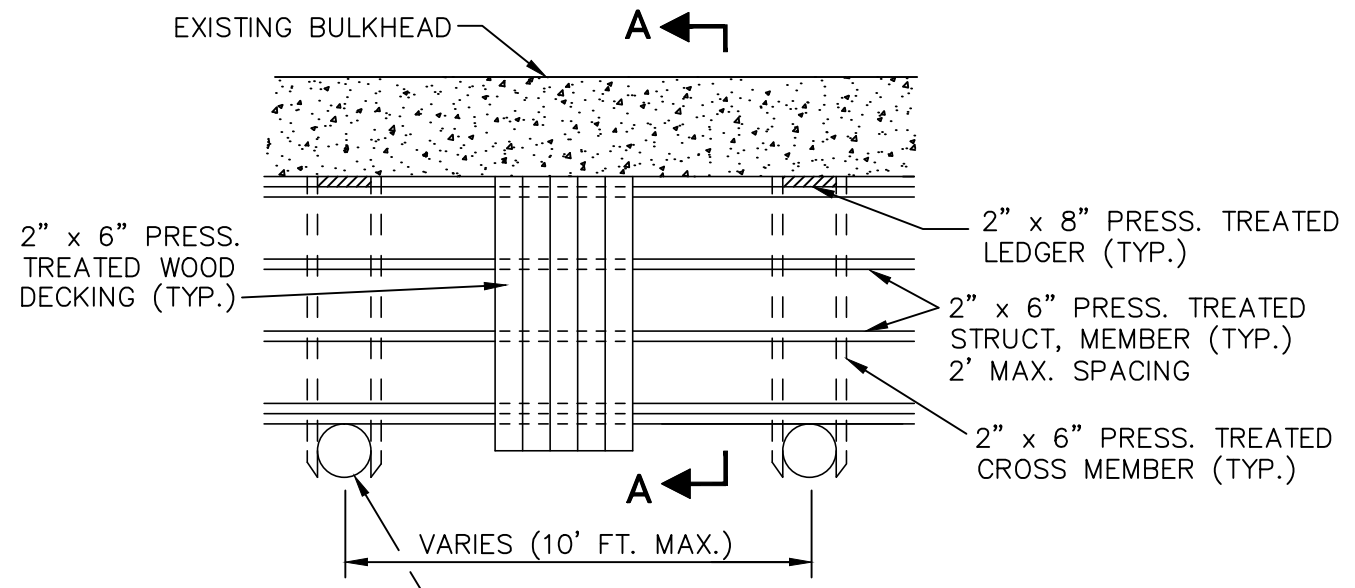

PLAN

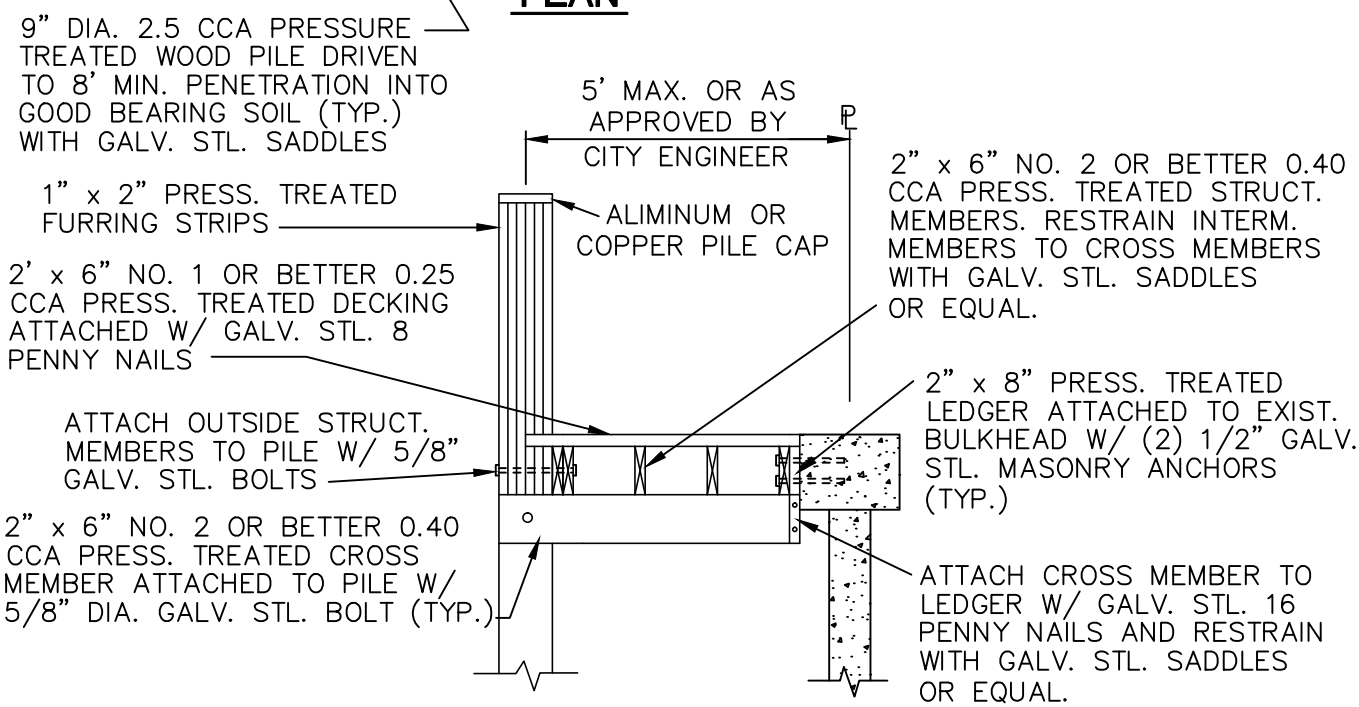

SECTION A-A

STANDARD DOCK PLAN

ENGINEERING STANDARDS 2016

REVISIONS		ENGINEERING DIVISION CITY OF POMPANO BEACH	STANDARD DOCK PLAN	
BY	DATE			DATE: FEB. 1998
				DWG. NO.
		SCALE: N.T.S.		307-1

J:\City-STANDARDS\2016 Standards Details\Misc. 3-3.dwg, 11/5/2015 11:10:51 AM

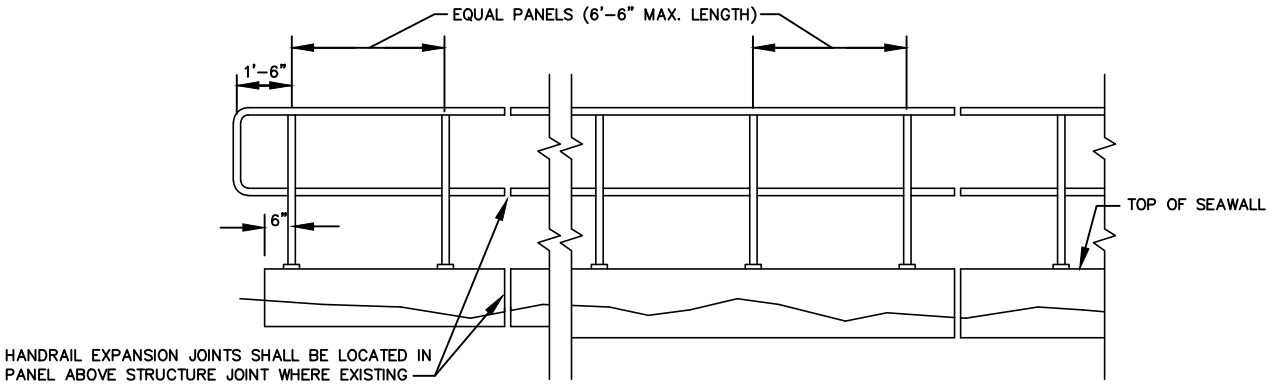

ELEVATION

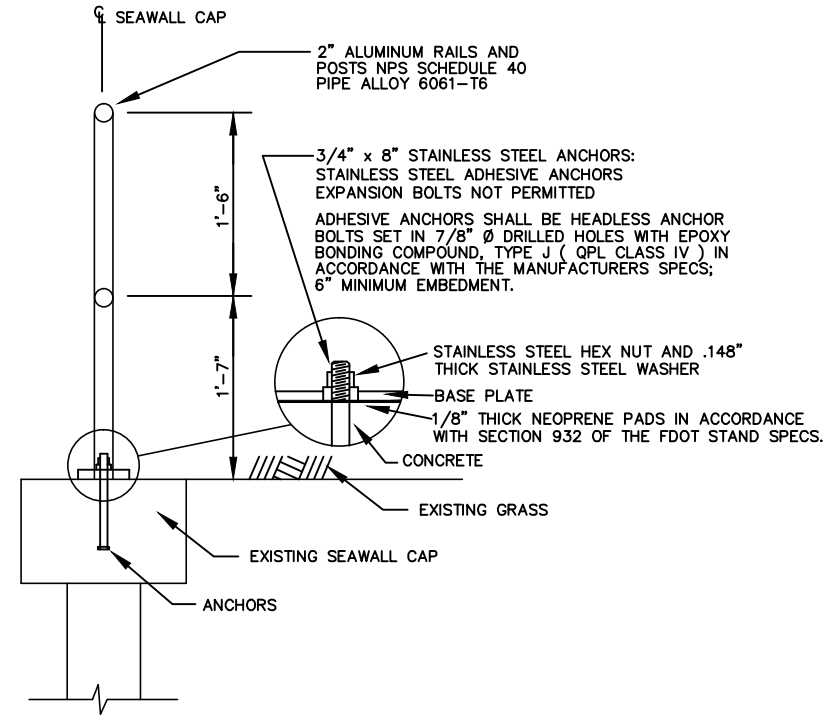

TYPICAL SECTION AT POST

MOUNT ON SEAWALL SHOWN

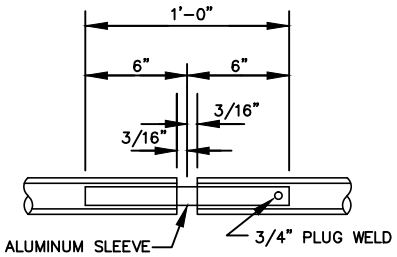

EXPANSION JOIT

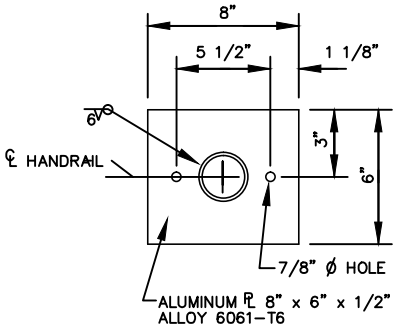

BASE PLATE

PIPE HAND RAIL NOTES

1. ALL FIXED JOINTS TO BE EITHER WELDED ALL AROUND AND GROUND SMOOTH; OR, COMMERCIALLY DESIGNED FIXED JOINT SYSTEMS (SOLDERED, BRAZED, FUSED, BONDED OR SHRINK FITTED) SPECIFIED ON THE PLANS OR APPROVED BY THE ENGINEER. MECHANICAL JOINTS OTHER THAN EXPANSION JOINTS ARE NOT PERMITTED UNLESS SPECIFIED ON THE PLANS OR APPROVED IN WRITING BY THE ENGINEER. POSTS SHALL BE CONNECTED TO BASE BY WELD ONLY. WELD FILLER TO BE ALLOY ER5356, ER5556 OR ER5183.

2. ANCHOR BOLTS SHALL BE IN ACCORDANCE WITH ASTM A36 OR A307. NUTS, WASHERS, AND BOLTS TO BE STAINLESS STEEL IN CONFORMANCE WITH ASTM A153. AFTER THE NUTS HAVE BEEN TIGHTENED, THE ANCHOR BOLT THREADS SHALL BE DISTORTED OR THE NUTS AND BOLTS SPOT WELDED AND COATED WITH ZINC COMPOUND.

3. ALUMINUM HANDRAIL SHALL BE CONSTRUCTED IN ACCORDANCE WITH SECTION 515 OF THE FDOT STANDARD SPECIFICATIONS. PAYMENT SHALL BE FULL COMENSATION FOR FURNISHING AND INSTALLING HANDRAIL, INCLUDING MOUNTING HARDWARE, AND SHALL BE PAID FOR UNDER THE CONTRACT UNIT PRICE FOR PIPE HANDRAIL (ALUMINUM), MI.

ALUMINUM PIPE HANDRAIL

ENGINEERING STANDARDS 2016

REVISIONS		ENGINEERING DIVISION CITY OF POMPANO BEACH	ALUMINUM PIPE HANDRAIL	
BY	DATE			
S.S.	1/31/12			DATE: MAY 2001
				DWG. NO.
		SCALE: N.T.S.		308-1

J:\City-STANDARDS\2016 Standards Details\Misc. 3-3.dwg, 11/5/2015 11:11:15 AM

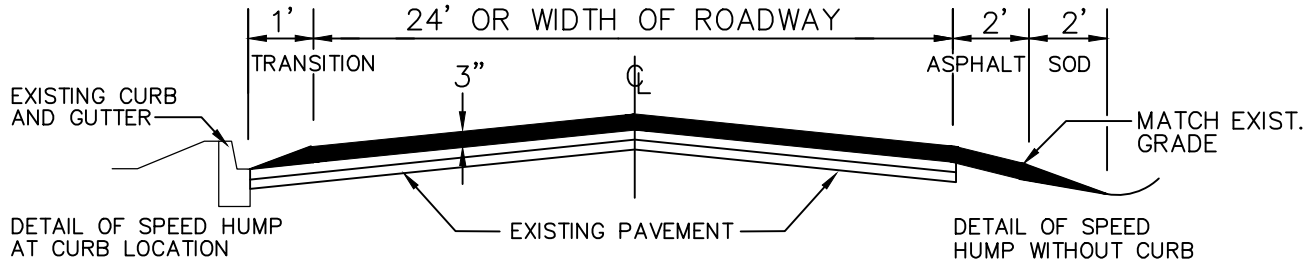

SECTION A-A

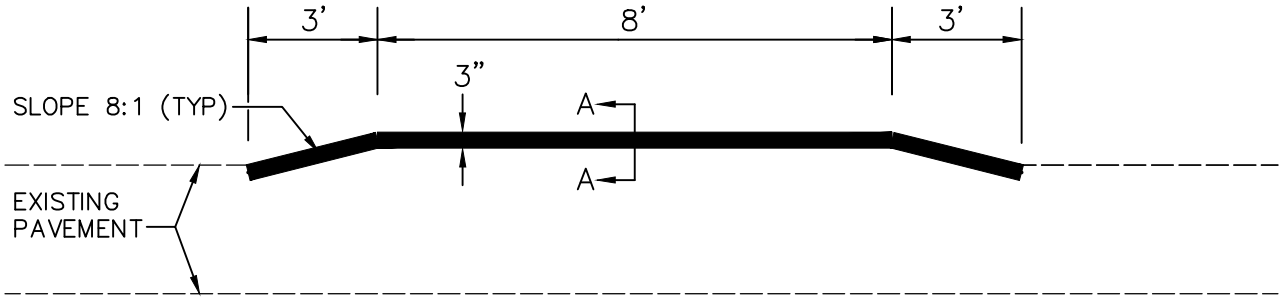

PROFILE VIEW

SPEED HUMP

ENGINEERING STANDARDS 2016

REVISIONS	
BY	DATE
T.L.G.	1/30/02
S.S.	7/13/06

ENGINEERING DIVISION
CITY OF POMPANO BEACH

SCALE: N.T.S.

SPEED HUMP

DATE: JANUARY 2002
DWG. NO.
309-1

J:\City-STANDARDS\2016 Standards Details\Misc. 3-3.dwg, 11/5/2015 11:11:43 AM

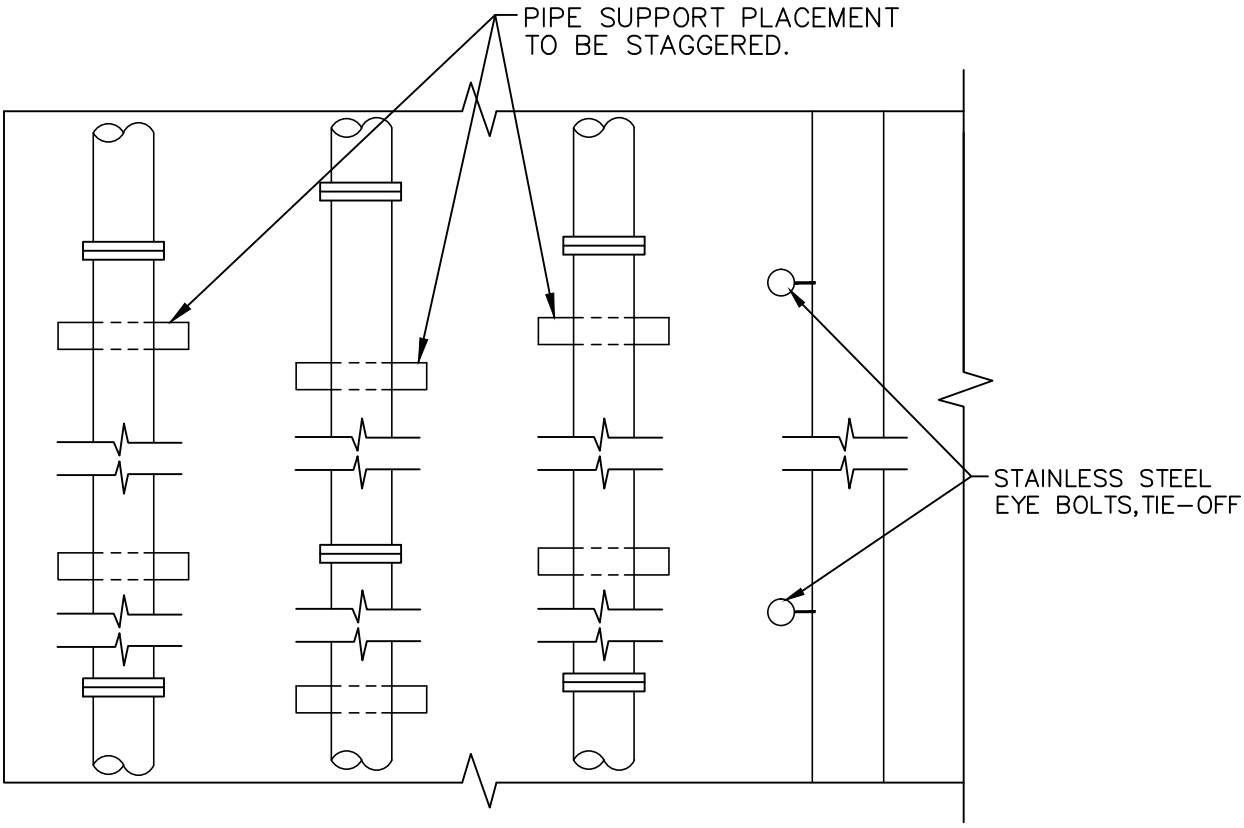

PLAN VIEW

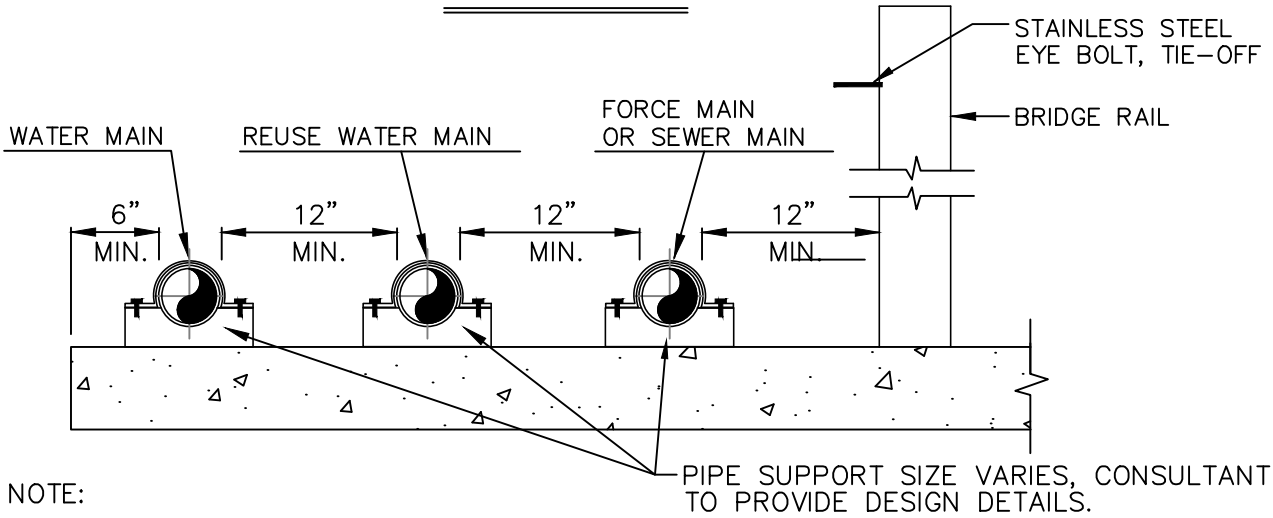

NOTE:
ALL STRAPS SHALL BE STAINLESS STEEL
(SEE CONCRETE SADDLE DETAIL NO. 310-3)

PARTIAL SECTION

ENGINEERING STANDARDS 2016

REVISIONS	
BY	DATE
S.S.	2/08/12

ENGINEERING DIVISION
CITY OF POMPANO BEACH

SCALE: N.T.S.

UTILITIES BRIDGE DECK

DATE: JAN. 2012
DWG. NO.
310-1

J:\City-STANDARDS\2016 Standards Details\Misc. 3-3.dwg, 11/5/2015 11:43:46 AM

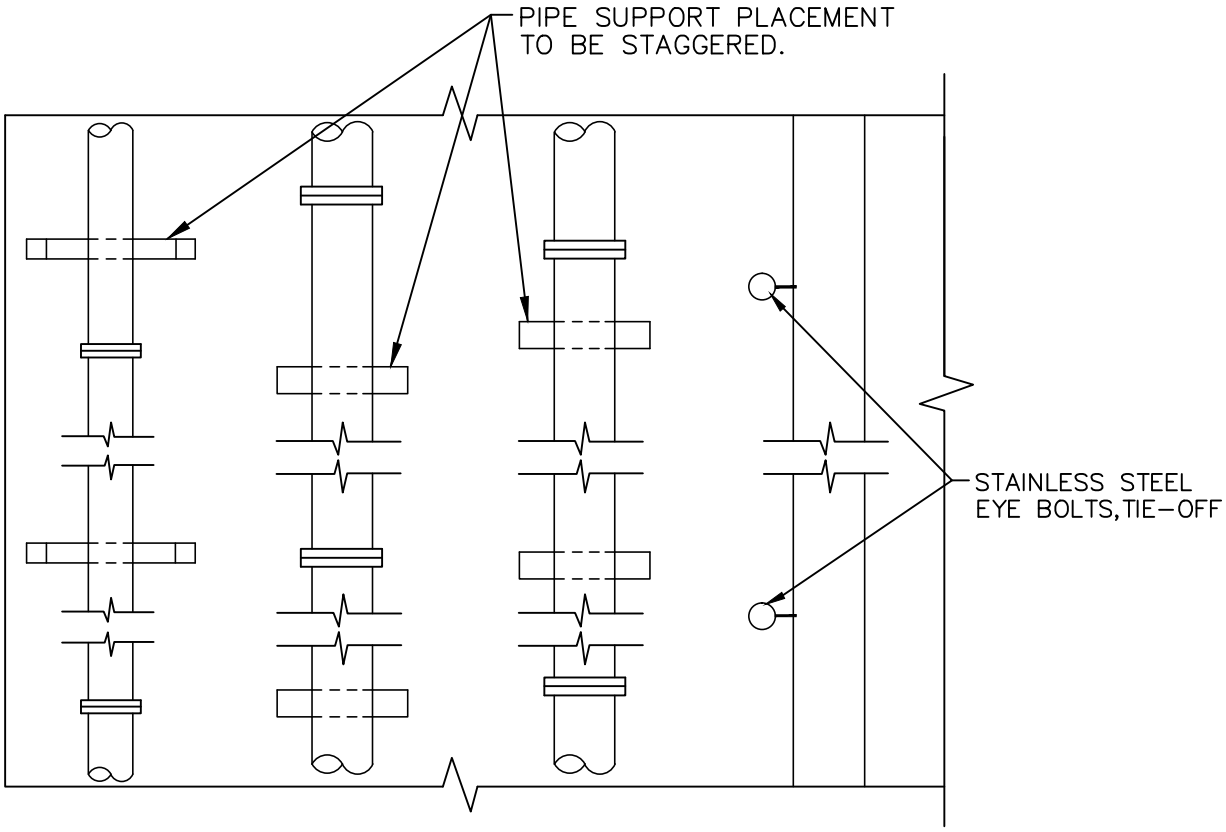

PLAN VIEW

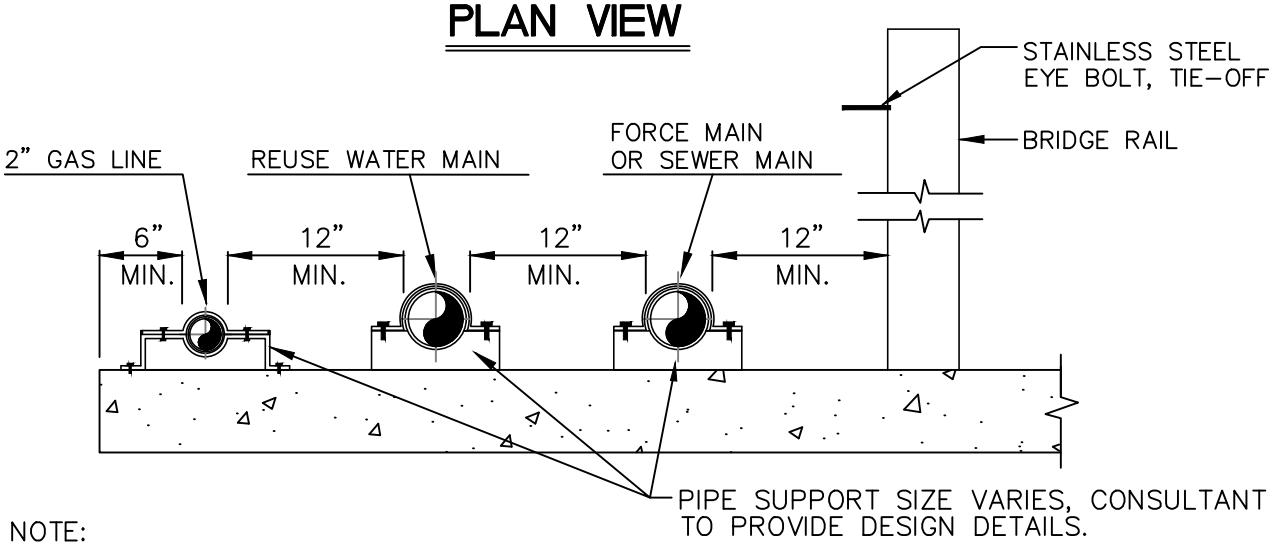

NOTE:

ALL STRAPS SHALL BE STAINLESS STEEL
(SEE CONCRETE SADDLE DETAIL NO. 310-3)

PARTIAL SECTION

ENGINEERING STANDARDS 2016

REVISIONS	
BY	DATE
S.S.	2/08/12

ENGINEERING DIVISION
CITY OF POMPANO BEACH

SCALE: N.T.S.

UTILITIES BRIDGE DECK

DATE: JAN. 2012
DWG. NO.
310-2

J:\City-STANDARDS\2016 Standards Details\Misc. 3-3.dwg, 11/5/2015 11:44:51 AM

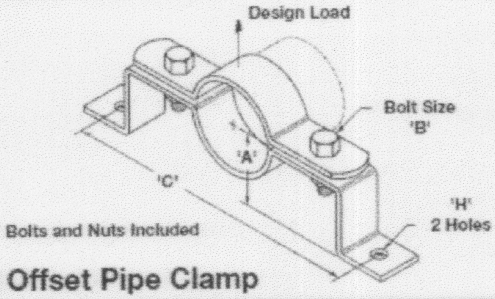

Material: Steel (Stainless steel available)

Standard Finish: Plain or Electro-Plated

Service: Designed for supporting vertical or horizontal pipe runs at a fixed distance from a wall or structure.

Ordering: Specify part number and finish.

Note: Ductile and cast iron sizes are available.

Figure B3148 Offset Pipe Clamp

Part No.	Nominal Pipe Size		'A'		Bolt Size 'B'	'C'		'H'		Design Load Lbs.	Design Load kN	Wt./C Lbs.	Wt./C kg
B3148-1/2	1/2"	(15)	2 1/2"	(63.5)	3/8"-16 x 1 1/2"	6"	(152.4)	7/16"	(11.1)	190	(.84)	106	(48.1)
B3148-3/4	3/4"	(20)	2 1/2"	(63.5)	3/8"-16 x 1 1/2"	7 5/16"	(185.7)	7/16"	(11.1)	190	(.84)	112	(50.8)
B3148-1	1"	(25)	2 5/8"	(66.7)	3/8"-16 x 1 1/2"	7 9/16"	(192.1)	7/16"	(11.1)	190	(.84)	123	(55.8)
B3148-1 1/4	1 1/4"	(32)	2 13/16"	(71.4)	3/8"-16 x 1 1/2"	7 7/8"	(200.0)	7/16"	(11.1)	190	(.84)	133	(60.3)
B3148-1 1/2	1 1/2"	(40)	2 15/16"	(74.6)	3/8"-16 x 1 1/2"	8 1/4"	(209.5)	7/16"	(11.1)	190	(.84)	140	(63.5)
B3148-2	2"	(50)	3 3/16"	(81.0)	3/8"-16 x 1 3/4"	9 1/8"	(231.8)	7/16"	(11.1)	420	(1.87)	195	(88.4)
B3148-2 1/2	2 1/2"	(65)	3 7/16"	(87.3)	3/8"-16 x 1 3/4"	10 1/2"	(266.7)	7/16"	(11.1)	420	(1.87)	226	(102.5)
B3148-3	3"	(80)	3 3/4"	(95.2)	3/8"-16 x 1 3/4"	11 1/8"	(282.6)	7/16"	(11.1)	420	(1.87)	244	(110.7)
B3148-4	4"	(100)	4 1/4"	(107.9)	1/2"-13 x 2"	12 1/2"	(317.5)	9/16"	(14.3)	610	(2.71)	358	(162.4)
B3148-5	5"	(125)	4 3/4"	(120.6)	1/2"-13 x 2 1/4"	13 3/4"	(349.2)	9/16"	(14.3)	610	(2.71)	415	(188.2)
B3148-6	6"	(150)	5 5/16"	(134.9)	1/2"-13 x 2 1/4"	16 1/2"	(419.1)	9/16"	(14.3)	870	(3.87)	685	(310.7)
B3148-8	8"	(200)	6 5/16"	(160.3)	1/2"-13 x 2 1/2"	18 5/8"	(473.1)	9/16"	(14.3)	870	(3.87)	815	(369.7)
B3148-10	10"	(250)	7 3/4"	(196.8)	3/4"-10 x 3"	23"	(584.2)	13/16"	(20.6)	870	(3.87)	2142	(971.6)
B3148-12	12"	(300)	8 3/4"	(222.2)	3/4"-10 x 3"	25"	(635.0)	13/16"	(20.6)	870	(3.87)	2337	(1060.0)

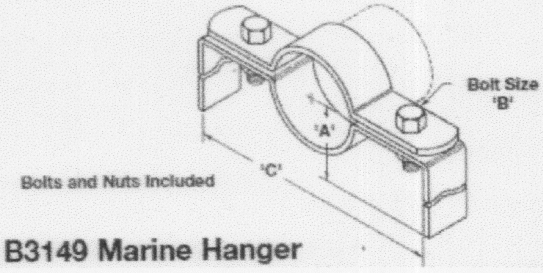

Material: Steel (Stainless steel available)

Standard Finish: Plain or Electro-Plated

Service: Designed for suspending or supporting pipe runs where exact distance from structure to pipe cannot be determined until installation. Field modify legs to suit conditions.

Ordering: Specify part number and finish.

Note: Ductile and cast iron sizes are available.

Figure B3149 Marine Hanger

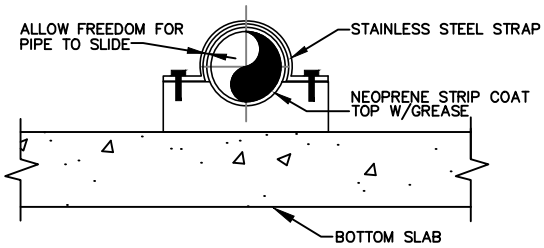

CONCRETE SADDLE

NOTE:

ALL DETAILS SHOWN FOR EXAMPLE ONLY. DESIGNER SHALL ASSUME RESPONSIBILITY FOR COMPLETE AND ADEQUATE DESIGN OF ALL COMPONENTS.

ENGINEERING STANDARDS 2016

REVISIONS		ENGINEERING DIVISION CITY OF POMPANO BEACH	PIPE STRAPS DETAILS	
BY	DATE			DATE: FEB. 2012
				DWG. NO.
		SCALE: N.T.S.		310-3

J:\City-STANDARDS\2016 Standards Details\Misc. 3-3.dwg, 11/5/2015 11:45:42 AM

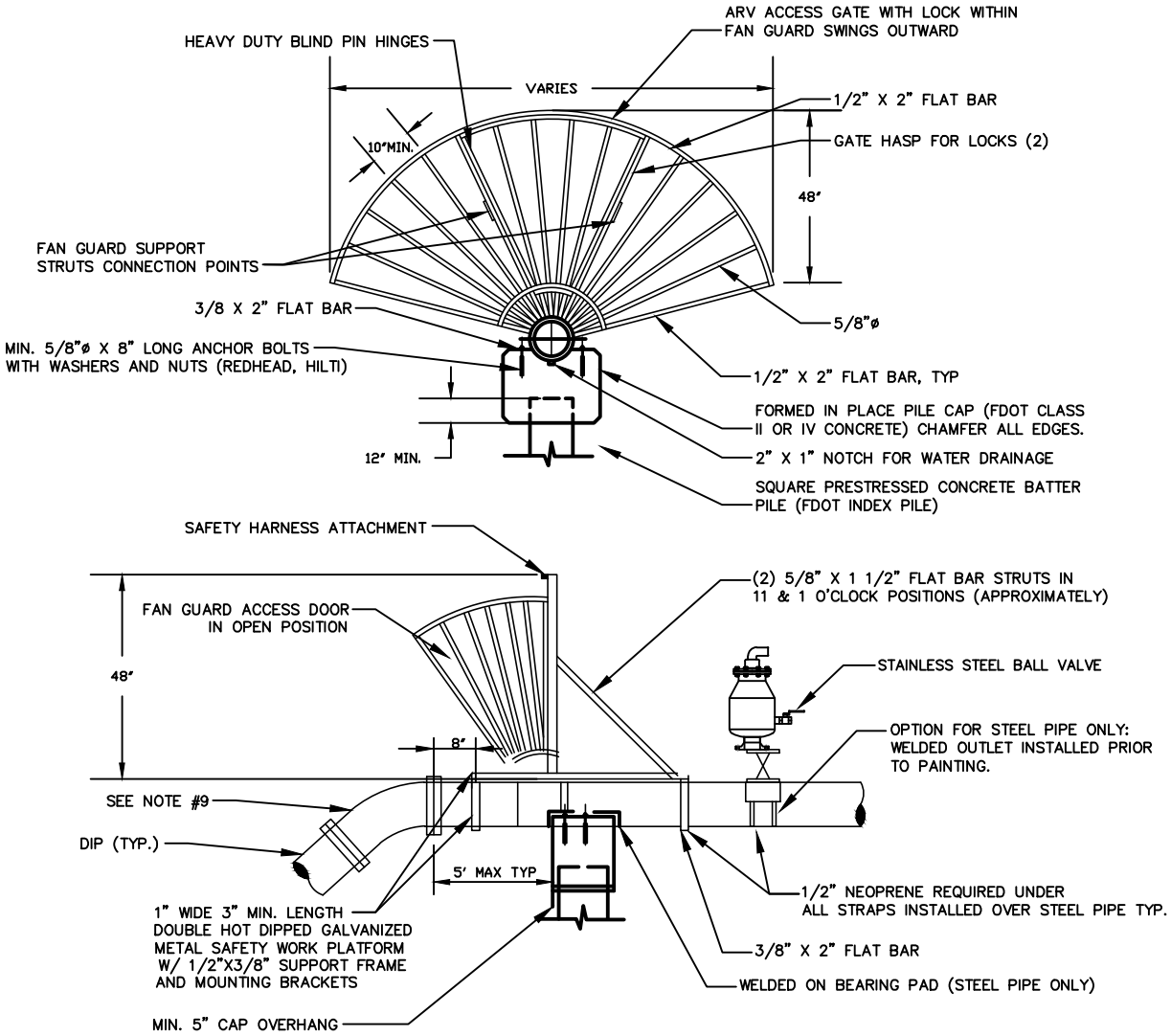

NOTES:

1. FAN GUARDS SHALL BE PLACED AT EACH END OF CANAL CROSSING.
2. HARDWARE SHALL BE PAINTED WITH COAL TAR EPOXY.
3. FANGUARD WITH HARDWARE SHALL. BE FABRICATED FROM DOUBLE HOT DIPPED GALVANIZED STEEL.
4. SHOP DRAWINGS FOR FANGUARDS, CAPS, AND PILES MUST SUBMITTED TO PBCWUD FOR REVIEW AND APPROVAL PRIOR TO PRE-CONSIRUC11ON MEETING.
5. REINFORCING STEEL SHALL CONFORM TO ASTM A-615 GRADE 60. MIN. 2" CONCRETE COVER OVER ALL STEEL.
6. SEE "TYPICAL CANAL CROSSING DETAIL" FOR ADDITIONAL REQUIREMENTS.
7. NO WELDING OF REBAR TO REBAR OR REBAR TO PILE STRANDS SHALL BE ALLOWED.
8. DESIGN DRAWINGS ARE REQUIRED FOR DUAL PIPE AERIAL CROSSINGS.
9. LONG RADIUS WELDED ON UPPER BENDS ARE ACCEPTABLE FOR STEEL PIPE.
10. IF A PILE/ CAP STEEL CONNECTION IS REQUIRED BY DESIGNING ENGINEER MIN. (4) #8 REINFORCEMENT BARS SMALL BE DRILLED AND DOWELED (EPOXIED) MIN. 16" DEEP INTO THE PILE AND TIED WITH THE CAP STEEL.

FAN GUARD

ENGINEERING STANDARDS 2016

REVISIONS	
BY	DATE
TCW	1/12/12

ENGINEERING DIVISION
CITY OF POMPANO BEACH

SCALE: N.T.S.

FAN GUARD

DATE: JAN. 2012
DWG. NO.
311-1

J:\City-STANDARDS\2016 Standards Details\Misc. 3-3.dwg, 11/5/2015 11:46:28 AM

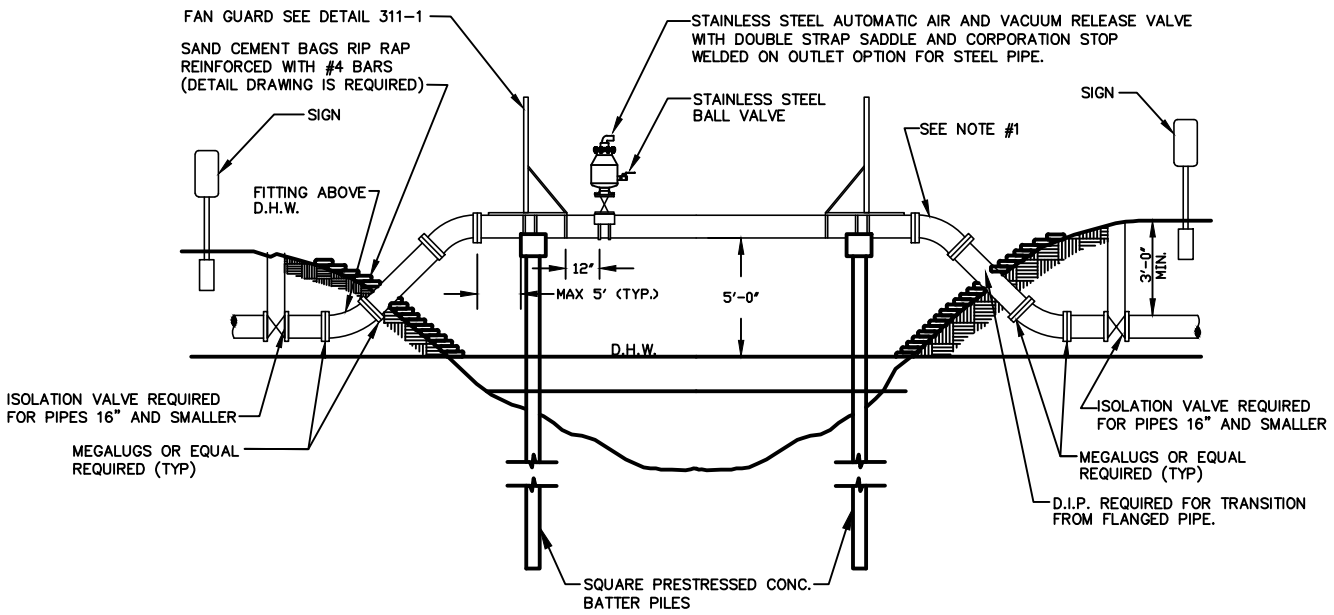

NOTES:

1. ALL EXCPOSEO PIPE SHALL BE DUCTILE IRON OR PREFABRICATED STEEL WITH FLANGED FITTINGS AND TORUSEAL GASKETS. RETAINER GLANDS AND UNIFLANGE TYPE FITTINGS ARE NOT TO BE SUBSTITUTED FOR FLANGED FITTINGS. PREFABRICATED STEEL PIPE MAY INCORPORATE WELDED ON LONG RADIUS UPPER BENDS. PREFABRICATED FLANGED PIPE SHALL BE FACTORY TESTED.

2. SPAN IENGTHS AS REQUIRED BY PERMITTING AGENCY

3. FAN GUARDS ARE REQUIRED. SEE FAN GUARD / PILE CAP DESIGN DETAILS. FOR ADDITIOAL REQUIREMENTS

4A. ALL EXPOSED PIPING SHALL BE PAINTED AS SPECIFIED IN THE APPRRPVED MATERIAL LIST.

4B. ALL HARDWARE SHALL BE PAINTED WITH COAL-TAR EPOXY.

5. PIPE SHALL BE CRADLED ON ½" THICK NEOPRENE. (DUROMETER GRADE 50) CURRENT FDOT STANDARDS APPLY. NEOPRENE IS REQUIRED AT ALL STRAPS INSTALLED OVER STEEL PIPE. NEOPRENE SHALL EXTEND 1" BEYOND THE EDGES Of CRADLE AND STRAPS.

6. TIE-DOWN STRAPS MUST PROPERLY FIT AT AND SECURE PIPE IN CRADLE AND STRAPS.

7. PIPE CRADLE IN .CNJ SHALL CONTACT Ji CIRCUMFERENCE OF PIPE. (SEE FAN GUARD DETAIL)

8. SHOW EXISTING CANAL CROSS SECTION. Ultimate CANAL SECTION, MD RELEVANT ELEVATIONS AND DISTANCES ON A TO SCALE DETAIL DRAWING.

9. PILE LIFT CABLE SHALL BE REMOVED BELOW SURFACE: HOLE SHALL BE FILLED WITH EPOXY CEMENT.

10. THREADED AREAS OF BRASS FITTINGS SHALL BE SPIRAL WRAPPED WITH TWO WRAPS OF TEFLON TAPE.

11. THE BATTER PILES AND CAP DESIGN SHALL BE SHOWN ON TO SCALE SIGNED AND SEALED DETAIL DRAWINGS. MIN. 10·x10· TYPE: 1A FLORIDA DOT INDEX BATTER PILES ARE REQUIRED. PILE PENETRATION BELOW CANAL BOTOM SHALL BE 15' MINIMUM LOAD CAPACITY OF 20 TONS PER PILE IS REQUIRED (FOOT STANDARDS APPLY). SIGNED AND SEALED SHOP DRAWINGS ARE REQUIRED.

12. PREFABRICATED STEEL PIPE SHALL HAVE WELDED ON BEARING PADS EXTENDING MIN. 1" BEYOND PIPE CRADLE. THE PADS SHALL BE INSTALLED BY STEEL PIPE MANUFACTURER PRIOR TO PAINTING.

13. FORCE MAIN CROSSINGS OVER BODIES OF WATER MAY BE SUBJECT TO A D.E.P. "NOTICED GENERAL ENVIRONMENTAL RESOURCE PERMIT- (NGP)

TYPICAL CANAL CROSSING

ENGINEERING STANDARDS 2016

REVISIONS	
BY	DATE
TCW	1/12/12
S.S.	1/26/12

ENGINEERING DIVISION
CITY OF POMPANO BEACH

SCALE: N.T.S.

TYPICAL CANAL CROSSING

DATE: JAN. 2012
DWG. NO.
312-1

J:\City-STANDARDS\2016 Standards Details\Misc. 3-3.dwg, 11/5/2015 11:47:08 AM

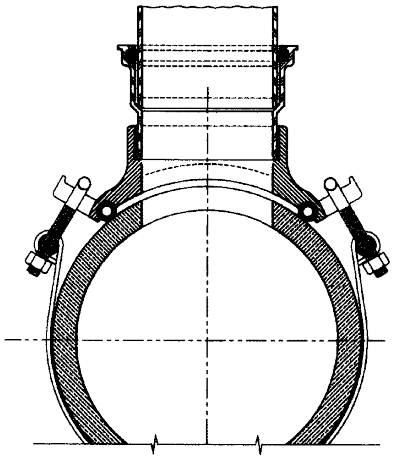

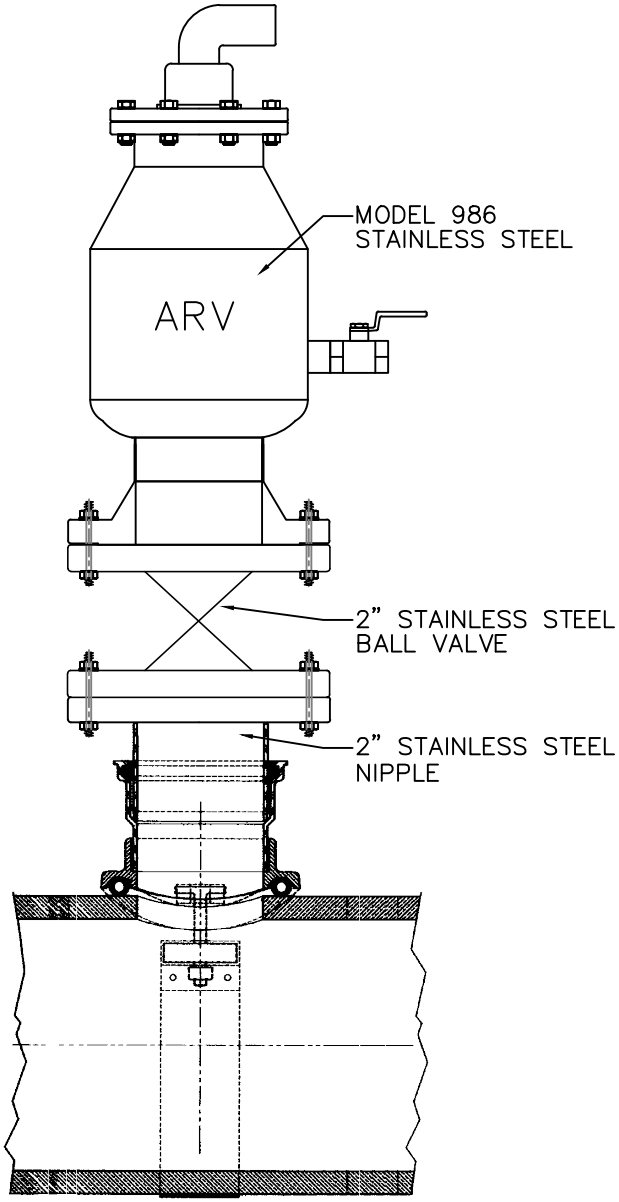

INLET: GASKETED BELL - SDR 35 PVC

Base Casting is ASTM A-48 Class 30 Cast Iron
(Various Contours available to fit 6.275" - 30.00" O.D. Mains)

PVC Adapter is an ASTM D3034, SDR-35
Gasketed Bell

Adapter is cemented permanently in place with two-part urethane adhesive

Base of Saddle is dip-coated in a Waterbased Bituminous Coating

Strap is 24 ga. x 2.5" wide Type 304 Stainless Steel

Strap Pins are .75" dia. Type 303 Stainless Steel

T-Bolts are .375" - 16 Type 304 Stainless Steel

Nuts and Washers are Type 18-8 Stainless Steel

O-Ring is ASTM C-361-77 Tubular Polyisoprene

4" inlet requires a 4" dia. Tap in the Sewer Main

6" inlet requires a 6" dia. Tap in the Sewer Main
(Sewer Main must be at least 8" dia.)

Note: This Dwg. supercedes Dwg. No. R-3408-D2

H-TEC STAINLESS STEEL AIR RELEASE VALVE

ENGINEERING STANDARDS 2016

REVISIONS		ENGINEERING DIVISION CITY OF POMPANO BEACH	H-TEC AIR RELEASE VALVE	
BY	DATE			
S.S.	1/23/12			DATE: JAN. 2012
				DWG. NO.
		SCALE: N.T.S.		313-1

J:\City-STANDARDS\2016 Standards Details\Misc. 3-3.dwg, 11/5/2015 11:47:43 AM

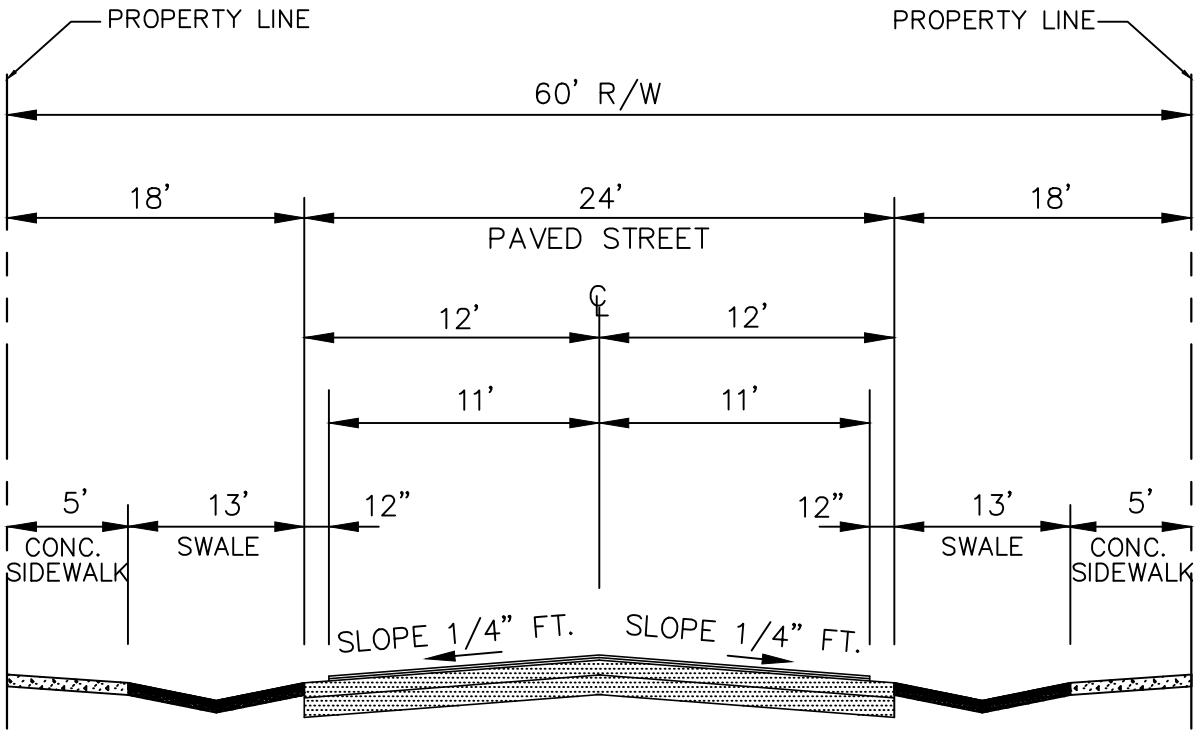

TYP. ROADWAY SECTION

ENGINEERING STANDARDS 2016

REVISIONS		ENGINEERING DIVISION CITY OF POMPANO BEACH	TYP. ROADWAY SECTION	
BY	DATE			DATE: JUNE 2014 DWG. NO.
		SCALE: N.T.S.		314-1

J:\City-STANDARDS\2016 Standards Details\Misc. 3-3.dwg, 11/5/2015 11:48:14 AM

STANDARD DETAILS - 2016
MISCELLANEOUS

CONCRETE CURB AND GUTTER (TYPE "F")	300-1
CONCRETE CURB (TYPE "D")	300-2
STANDARD PARKING SPACES	300-3
ACCESSIBLE PARKING SPACES	300-4
ACCESSIBLE SPACE SIGN	300-5
SIDEWALK DETAILS	301-1, 301-2
SIDEWALK OBSTRUCTION	301-3
UNDERCROSSING DETAILS	302-1
CHAIN LINK FENCE INSTALLATION	303-1, 303-2
GUARD POST	304-1
TYPICAL ROADWAY SECTION	305-1
TYPICAL DRIVEWAY SWALE SECTION	305-2
SURFACE RESTORATION	306-1 TO 306-4
STANDARD DOCK PLAN	307-1
ALUMINUM PIPE HANDRAIL DETAILS	308-1
SPEED HUMP DETAILS	309-1
UTILITIES BRIDGE DECK	310-1, 310-2
PIPE STRAPS DETAILS	310-3
FAN GUARD	311-1
TYPICAL CANAL CROSSING	312-1
H-TEC STAINLESS STEEL AIR RELEASE VALVE	313-1
TYPICAL ROADWAY SECTION	314-1

J:\City-STANDARDS\2016 Standards Details\Standards 2016.dwg, 11/4/2015 4:08:43 PM