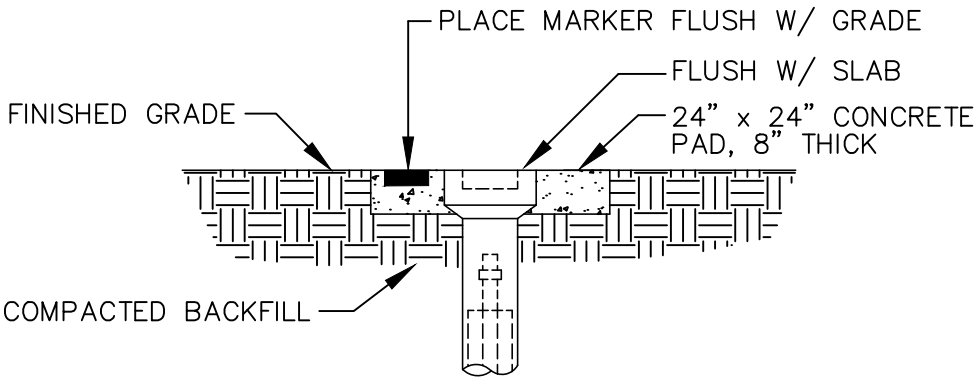

UNPAVED AREAS

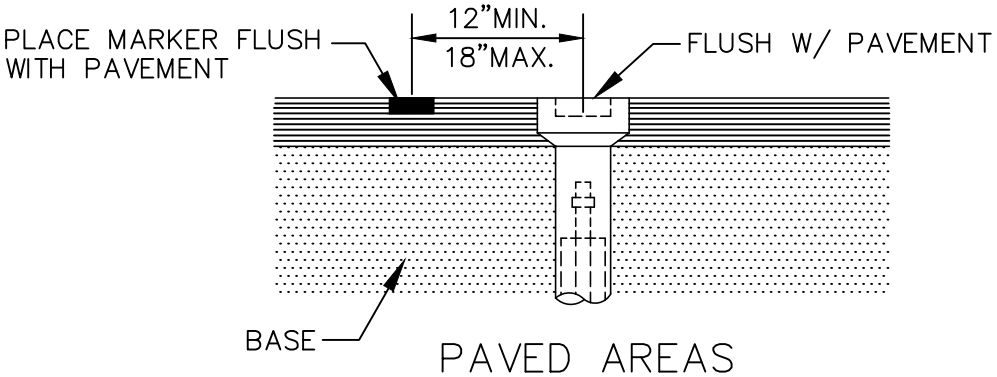

PAVED AREAS

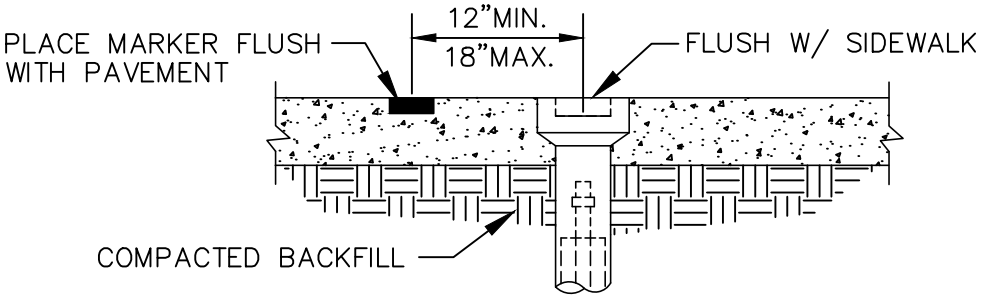

ON SIDEWALKS

NOTE: ALL LIDS MUST SAY "REUSE WATER"

VALVE BOX SETTINGS

ENGINEERING STANDARDS 2016

REVISIONS		ENGINEERING DIVISION CITY OF POMPANO BEACH	VALVE BOX SETTINGS	
BY	DATE			DATE: MAY 2007
				DWG. NO.
		SCALE: N.T.S.		500-1

J:\City-STANDARDS\2016 Standards Details\Reuse Water 5-1.dwg, 11/5/2015 12:22:24 PM

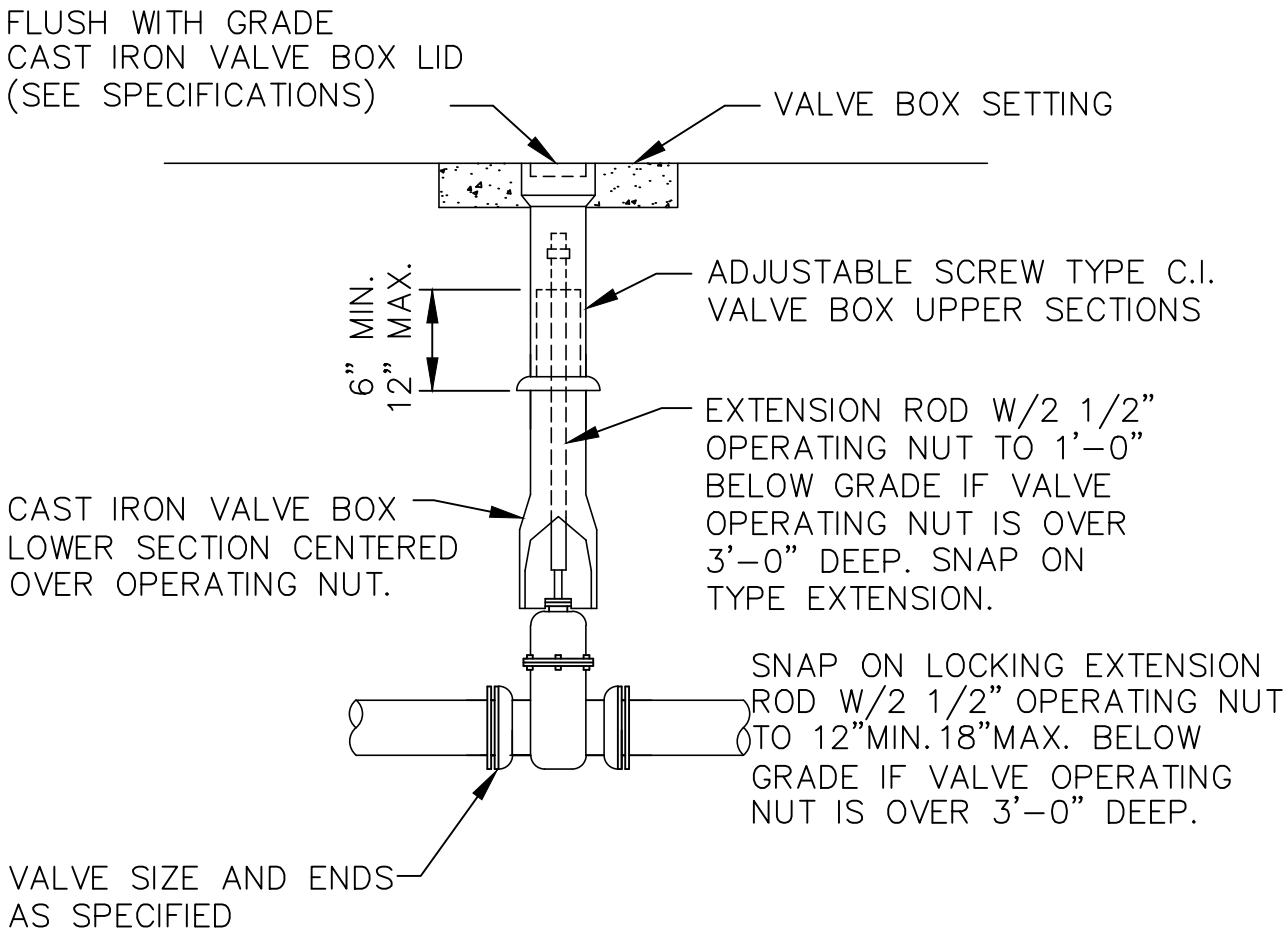

NOTE: ALL LIDS MUST SAY "REUSE WATER"

VALVE BOX SETTING FOR GATE
(WITH OUT GEAR OPERATION)

USE MEGALUGS AT ALL PIPE JOINTS

ENGINEERING STANDARDS 2016

REVISIONS	
BY	DATE
S.S.	2/06/12

ENGINEERING DIVISION
CITY OF POMPANO BEACH

SCALE: N.T.S.

VALVE BOX SETTING
(WITH OUT GEAR OPERATION)

DATE: MAY 2007
DWG. NO.
501-1

J:\City-STANDARDS\2016 Standards Details\Reuse Water 5-1.dwg, 11/5/2015 12:22:48 PM

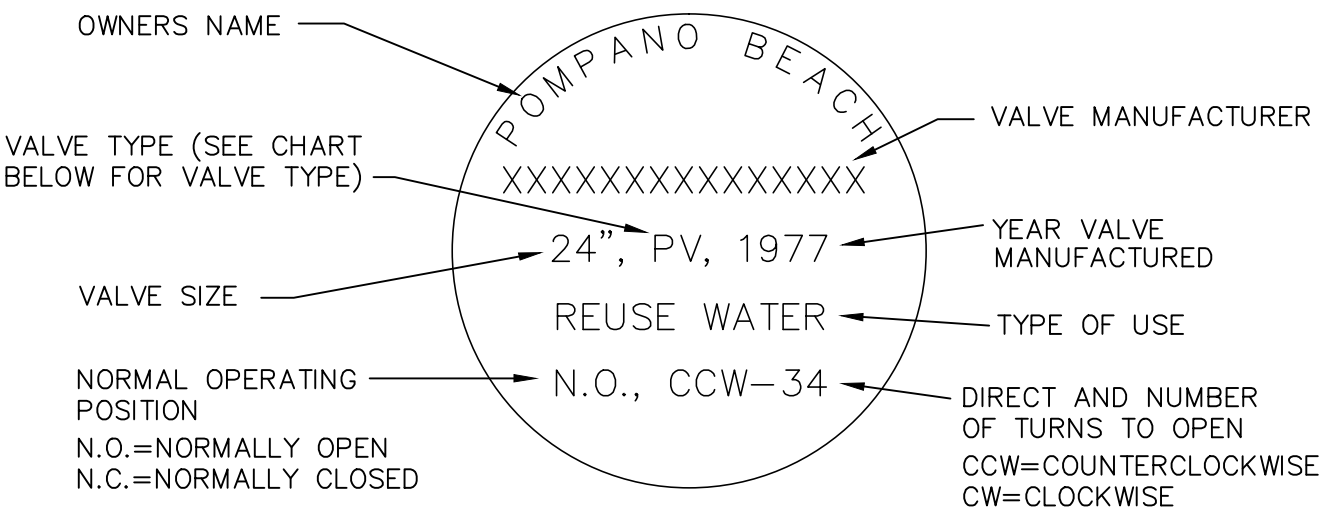

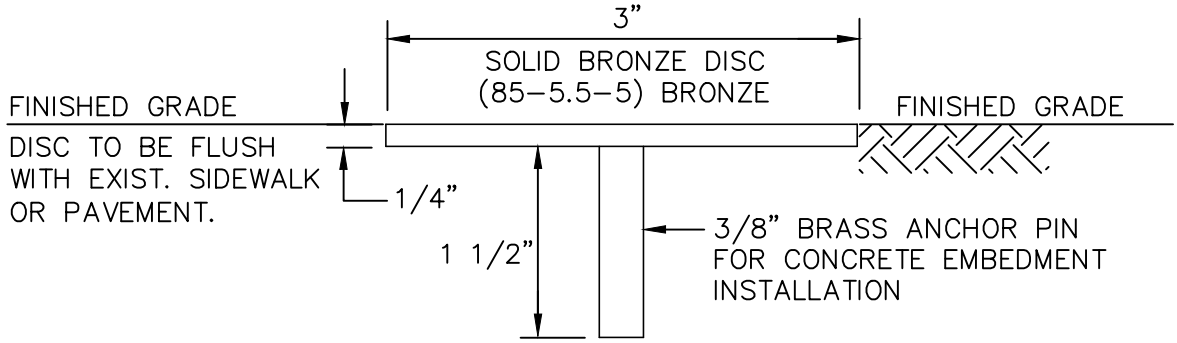

VALVE TYPES

BALL VALVE--BALLV
RESILIENT SEAT GATE VALVE--RSGV
RESILIENT WEDGE GATE VALVE--RWGV
BUTTERFLY VALVE--BV
PLUG VALVE--PV

NOTES:

1. VALVE INFORMATION TO BE ENGRAVED INTO TOP SURFACE WITH 1/4" CAPITAL LETTERS DOUBLE STAMPED.
2. ENTIRE MARKER TO BE COATED WITH CLEAR EPOXY TO PREVENT TARNISHING,
3. VALVE INFORMATION TO BE APPROVED BY CITY OF POMPANO BEACH UTILITIES DEPARTMENT.
4. MARKERS SHALL BE MANUFACTURED BY RG WRENCH OR APPROVED EQUAL.

UNDERGROUND VALVE IDENTIFICATION MARKER

ENGINEERING STANDARDS 2016

REVISIONS	
BY	DATE
S.S.	1/24/12

ENGINEERING DIVISION
CITY OF POMPANO BEACH

SCALE: N.T.S.

UNDERGROUND VALVE IDENTIFICATION MARKER

DATE: MAY 2007
DWG. NO.
502-1

J:\City-STANDARDS\2016 Standards Details\Reuse Water 5-1.dwg, 11/5/2015 12:23:12 PM

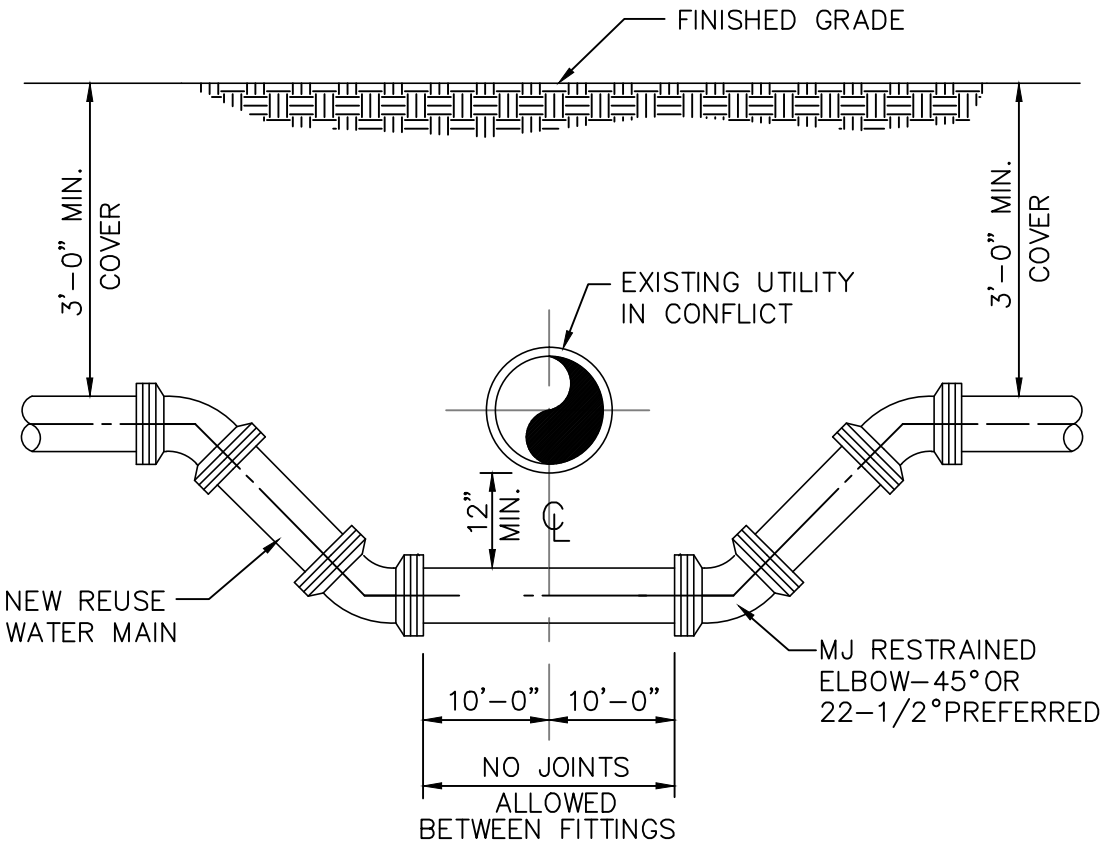

NOTES:

WHERE CONDITIONS PERMIT, PIPE DEFLECTION MAY BE USED INSTEAD OF BENDS TO OBTAIN THE MINIMUM CLEARANCE. FACTORY OFFSETS MAY BE USED ON 6" OR SMALLER MAINS AND LARGER MAINS ALSO.

TYPICAL UTILITY CONFLICT

ENGINEERING STANDARDS 2016

REVISIONS	
BY	DATE
S.S.	1/25/12

ENGINEERING DIVISION
CITY OF POMPANO BEACH

SCALE: N.T.S.

TYPICAL UTILITY CONFLICT

DATE: MAY 2007
DWG. NO.
503-1

J:\City-STANDARDS\2016 Standards Details\Reuse Water 5-1.dwg, 11/5/2015 12:23:41 PM

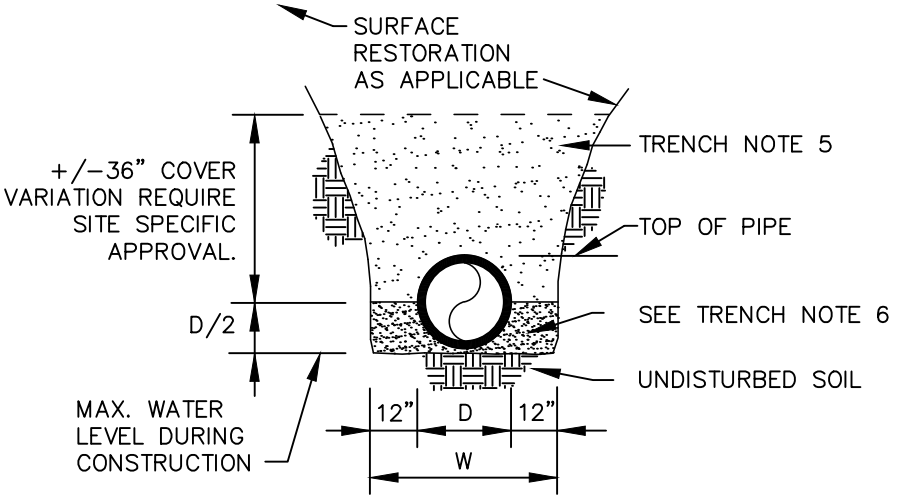

TRENCH BACKFILL / BEDDING CLASS " A "

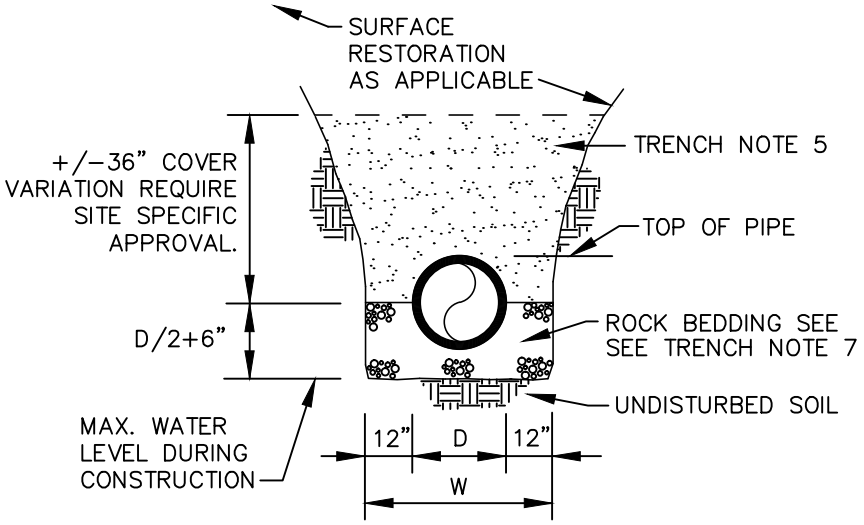

TRENCH BACKFILL / BEDDING CLASS " B "

ENGINEERING STANDARDS 2016

REVISIONS		ENGINEERING DIVISION CITY OF POMPANO BEACH	TRENCH BACKFILL / BEDDING	
BY	DATE			DATE: MAY 2007
				DWG. NO.
		SCALE: N.T.S.		504-1

J:\City-STANDARDS\2016 Standards Details\Reuse Water 5-1.dwg, 11/5/2015 12:24:40 PM

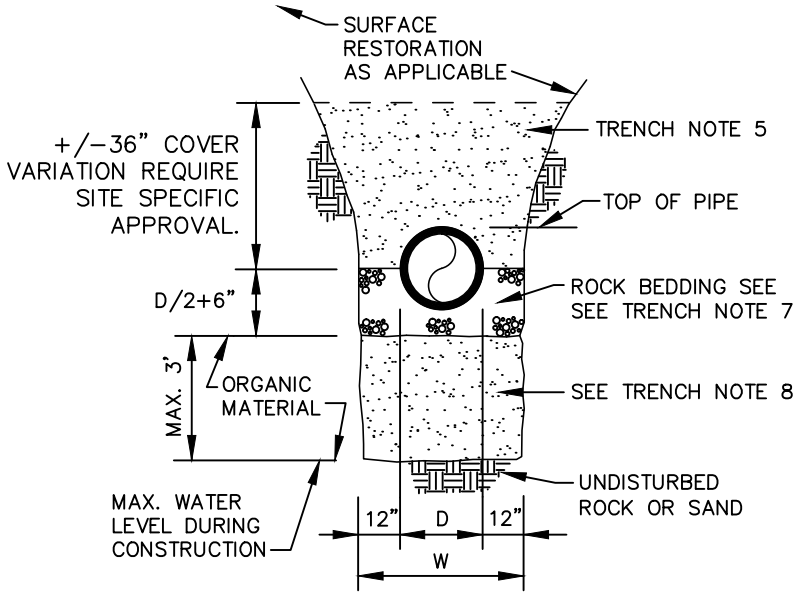

TRENCH BACKFILL / BEDDING CLASS " C "

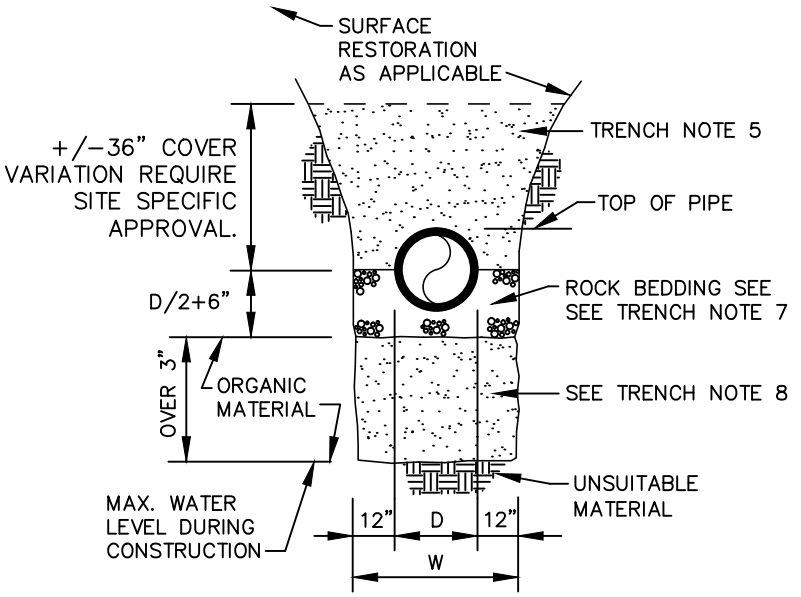

TRENCH BACKFILL / BEDDING CLASS " D "

ENGINEERING STANDARDS 2016

REVISIONS	
BY	DATE

ENGINEERING DIVISION
CITY OF POMPANO BEACH

SCALE: N.T.S.

TRENCH BACKFILL / BEDDING

DATE: MAY 2007
DWG. NO.
504-2

J:\City-STANDARDS\2016 Standards Details\Reuse Water 5-1.dwg, 11/5/2015 12:25:36 PM

TRENCH BACKFILL / BEDDING NOTES

1. OUTLINE OF TRENCH EXCAVATION IS FOR ILLUSTRATIVE PURPOSES ONLY. ACTUAL TRENCH WIDTH AND SHAPE WILL VARY WITH SOIL CONDITIONS. TRENCH EXCAVATION SHALL BE IN ACCORDANCE WITH THE "FLORIDA TRENCH SAFETY ACT" AND OSHA TRENCH SAFETY STANDARDS.

2. TYPICAL TRENCH BACKFILL/BEDDING FOR REUSE WATER MAIN AND FORCE MAIN INSTALLATIONS SHALL BE CLASS "A" AS SHOWN IN DETAIL.

3. TYPICAL TRENCH BACKFILL/BEDDING FOR GRAVITY SEWER INSTALLATION SHALL BE CLASS "B" AS SHOWN IN DETAIL.

4. TRENCH BACKFILL/BEDDING CLASS "C" AND CLASS "D" SHALL BE USED FOR PIPE INSTALLATIONS WHERE UNSUITABLE TRENCH MATERIALS ARE ENCOUNTERED.

5. TRENCH ZONE BACKFILL SHALL BE MATERIAL TYPE 1 OR TYPES A THRU H, OR ANY MIXTURE THEREOF, WHERE SURFACE RESTORATION TYPE "1" IS APPLICABLE, TRENCH ZONE BACKFILL SHALL BE PLACED IN 12" LIFTS, COMPACTED TO 90% OF THE MATERIAL'S MAXIMUM DENSITY AS DETERMINED BY ASTM D-697 (AASHTO T-99). WHERE SURFACE RESTORATION TYPES "2", "3" AND "4" ARE APPLICABLE, TRENCH BACKFILL SHALL BE PLACED IN 8" LIFTS COMPACTED TO 98% OF THE MATERIAL'S DENSITY AS DETERMINED BY ASTM D-698 (AASHTO T-99).

6. BEDDING MATERIAL FOR TYPICAL REUSE WATER MAIN INSTALLATION SHALL BE TYPE C. BEDDING SHALL BE COMPACTED TO 95% OF THE MATERIAL'S MAXIMUM DENSITY AS DETERMINED BY ASTM D-1557 (AASHTO T-180).

7. BEDDING MATERIAL FOR TYPICAL GRAVITY SEWER INSTALLATION AND ANY INSTALLATION WHERE UNSUITABLE TRENCH BOTTOM CONDITIONS ARE FOUND SHALL BE TYPE E. BEDDING SHALL BE PLACED IN LIFTS NOT TO EXCEED 6" AND COMPACTED TO 95% OF THE MATERIAL'S MAXIMUM DENSITY AS DETERMINED BY ASTM D-1557 (AASHTO T-180).

8. UNSUITABLE MATERIAL SHALL BE REMOVED TO UNDISTURBED ROCK OR SAND OR TO DEPTH AS SPECIFIED BY ENGINEER. BACKFILL MATERIAL SHALL BE TYPE C. BACKFILL SHALL BE PLACED IN 8" LIFTS COMPACTED TO 95% OF THE MATERIAL'S MAXIMUM DENSITY AS DETERMINED BY ASTM D-1557 AASHTO T-180).

9. BEDDING TYPES – THE FOLLOWING TYPES OF SUITABLE MATERIALS ARE DESIGNATED AND DEFINED AS FOLLOWING:

TYPE A: CRUSHED LIMEROCK OR SAND WITH 100 PERCENT PASSING A 1 INCH SIEVE AND A SAND EQUIVALENT VALUE NOT LESS THAN 50.

TYPE B: CRUSHED LIMEROCK OR SAND WITH 100 PERCENT PASSING A 1/2 INCH SIEVE AND A SAND EQUIVALENT VALUE NOT LESS THAN 50.

TYPE C: SAND WITH 100 PERCENT PASSING A 3/8 INCH SIEVE, AT LEAST 90 PERCENT PASSING A NUMBER 4 SIEVE, AND A SAND EQUIVALENT VALUE NOT LESS THAN 30.

TYPE D: CRUSHED LIMEROCK WITH 100 PERCENT PASSING A 1 INCH SIEVE AND NOT MORE THAN 10 PERCENT A NUMBER 4 SIEVE.

TYPE E: CRUSHED LIMEROCK OR SAND WITH 100 PERCENT PASSING A 3/4 INCH SIEVE AND NOT MORE THAN 10 PERCENT PASSING A NUMBER 4 SIEVE.

TYPE F: CRUSHED LIMEROCK MEETING THE FOLLOWING GRADATION REQUIREMENTS.

SIEVE SIZE	PERCENTAGE PASSING
2 INCH	100
1–1/2 INCH	90–100
1 INCH	20–55
3/4 INCH	0–15
NO. 200	0–3

TRENCH BACKFILL / BEDDING NOTES

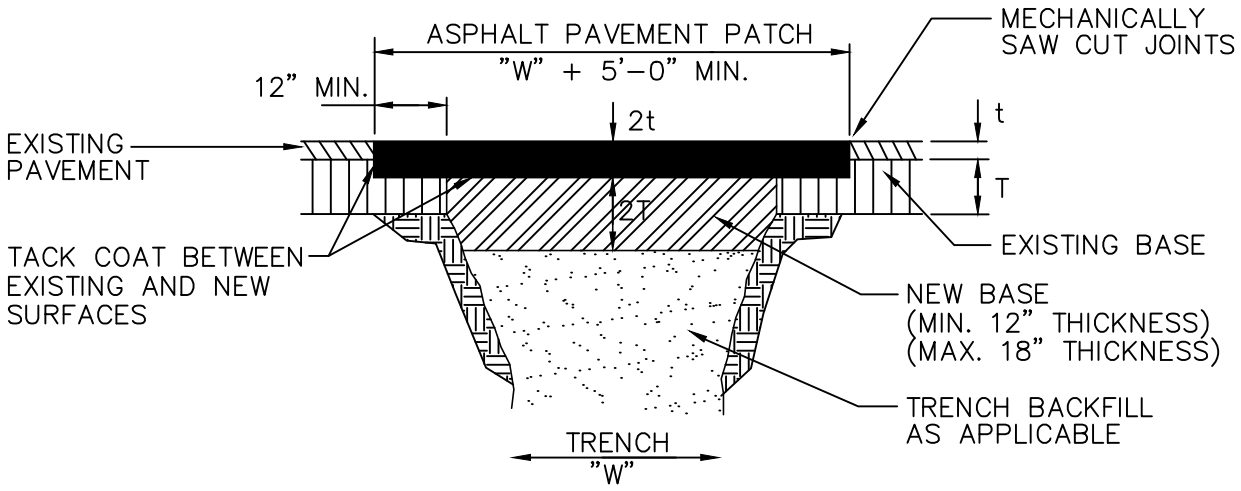

PERPENDICULAR ROAD CROSSINGS (TYPE III)

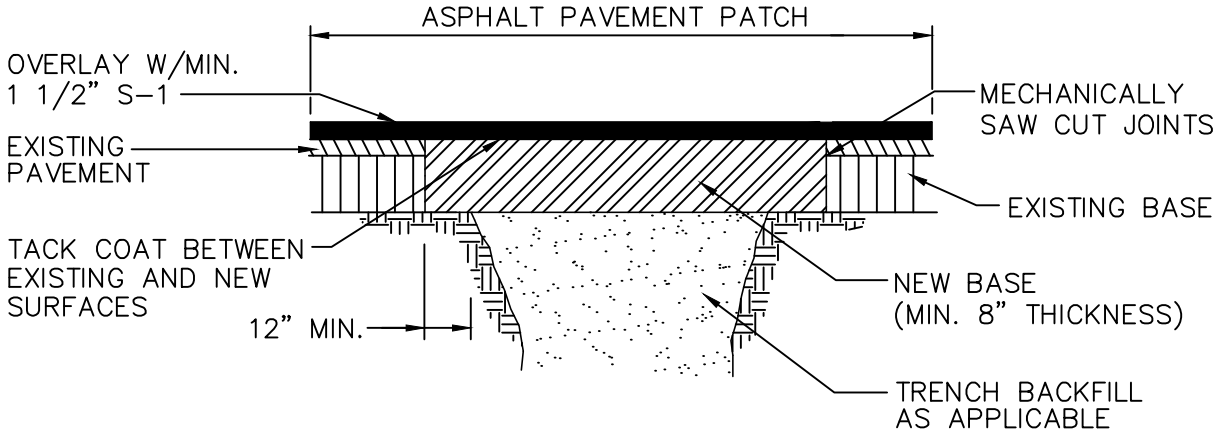

STANDARD PARALLEL ROAD RESTORATION (TYPE IV)

SURFACE RESTORATION

ENGINEERING STANDARDS 2016

REVISIONS		ENGINEERING DIVISION CITY OF POMPANO BEACH	SURFACE RESTORATION	
BY	DATE			DATE: MAY 2007
				DWG. NO.
		SCALE: N.T.S.		505-1

J:\City-STANDARDS\2016 Standards Details\Reuse Water 5-1.dwg, 11/5/2015 12:27:04 PM

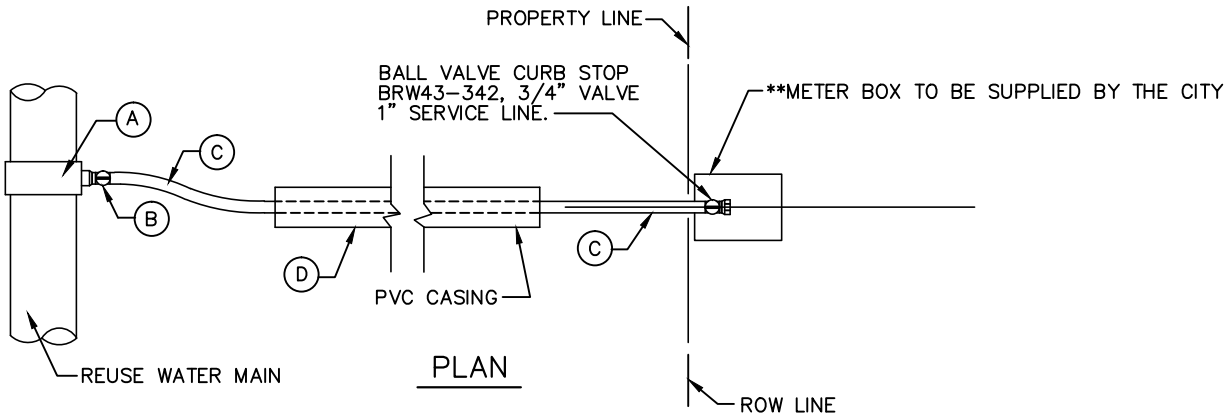

PLAN

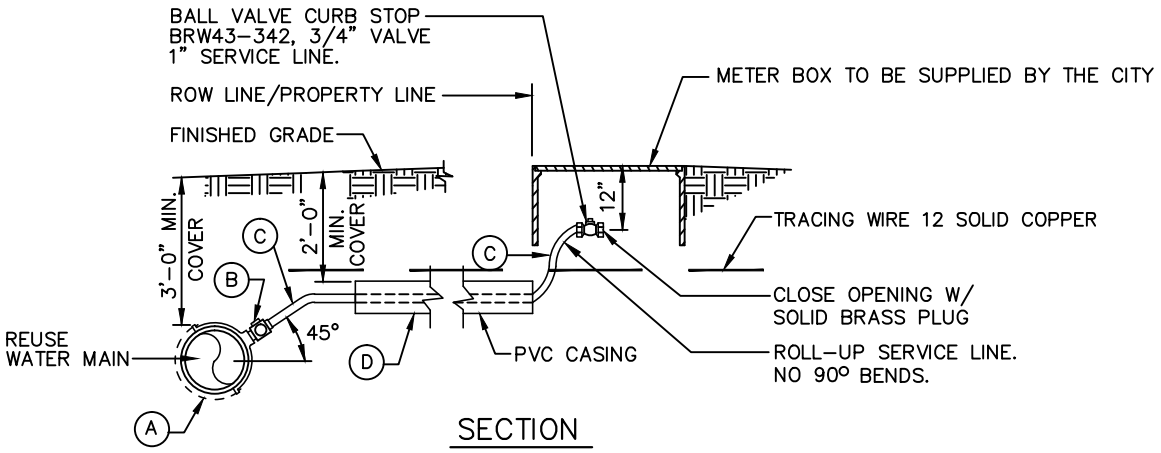

SECTION

REUSE WATER SERVICE LINES

(A) 1" TAPPING SADDLE
FORD FC202-690-CC4 (6"X1")
FC202-905-CC4 (8"X1")

(B) 1" CORPORATION STOP
FORD TYPE F1002-4

(C) 1" POLYETHYLENE PURPLE PIPE.

(D) 1 1/2" SCH. 40, PURPLE CASING MATERIAL.

TYPICAL 1" REUSE WATER SERVICE

ENGINEERING STANDARDS 2016

REVISIONS		ENGINEERING DIVISION CITY OF POMPANO BEACH	1" REUSE WATER SERVICE	
BY	DATE			DATE: MAY 2012 DWG. NO.
		SCALE: N.T.S.		506-1

J:\City-STANDARDS\2016 Standards Details\Reuse Water 5-1.dwg, 11/5/2015 12:27:37 PM

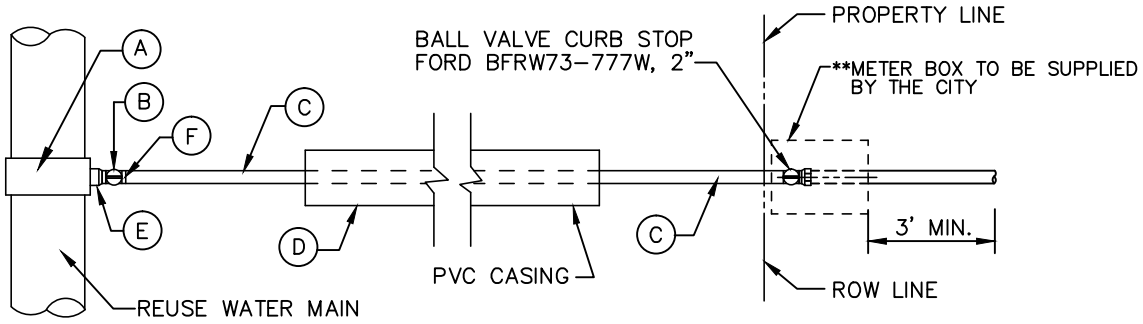

PLAN

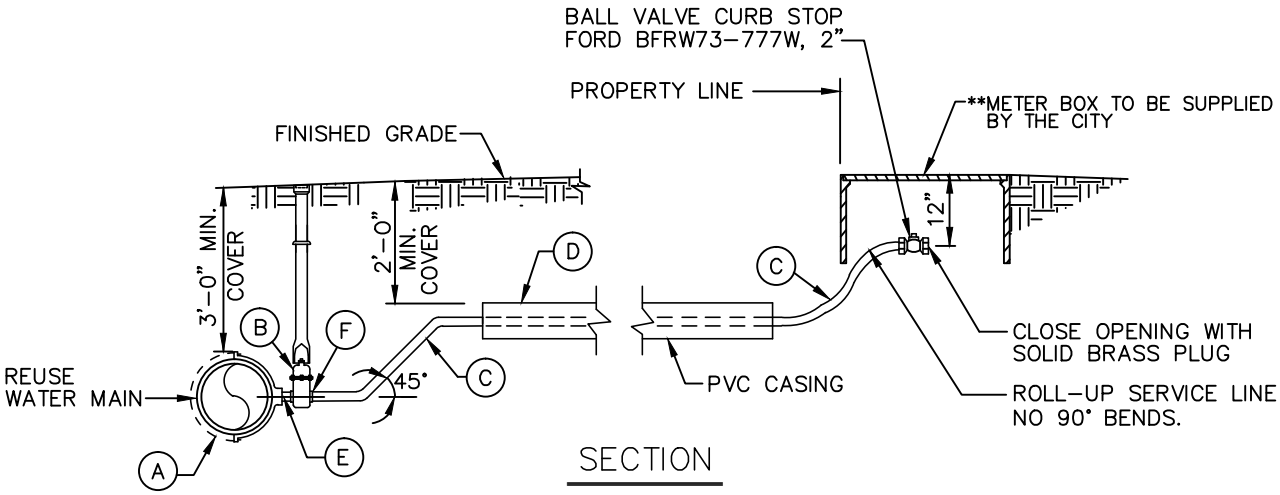

SECTION

(A) 2" TAPPING SADDLE IRON PIPE
THREADED FORD FC-202 OR EQUAL.

(B) 2" RESILIENT SEATED GATE VALVE
CLOW F61-03
MUELLER A-23-60-8
2 1/2"OPERATING NUT BOXED TO GRADE - TYLER 5 1/4" VALVE BOX

(C) 2" POLYETHYLENE PURPLE PIPE

(D) 2 1/2" SCH. 40, PURPLE CASING MATERIAL

(E) 2" X 3" BRASS NIPPLE

(F) 2" MIP COUPLING C-84-77 - PACK JOINT - CTS

TYPICAL 2" REUSE WATER SERVICE

ENGINEERING STANDARDS 2016

REVISIONS	
BY	DATE

ENGINEERING DIVISION
CITY OF POMPANO BEACH

SCALE: N.T.S.

2" REUSE WATER SERVICE

DATE: NOV. 2012
DWG. NO.
506-2

J:\City-STANDARDS\2016 Standards Details\Reuse Water 5-1.dwg, 11/5/2015 12:28:16 PM

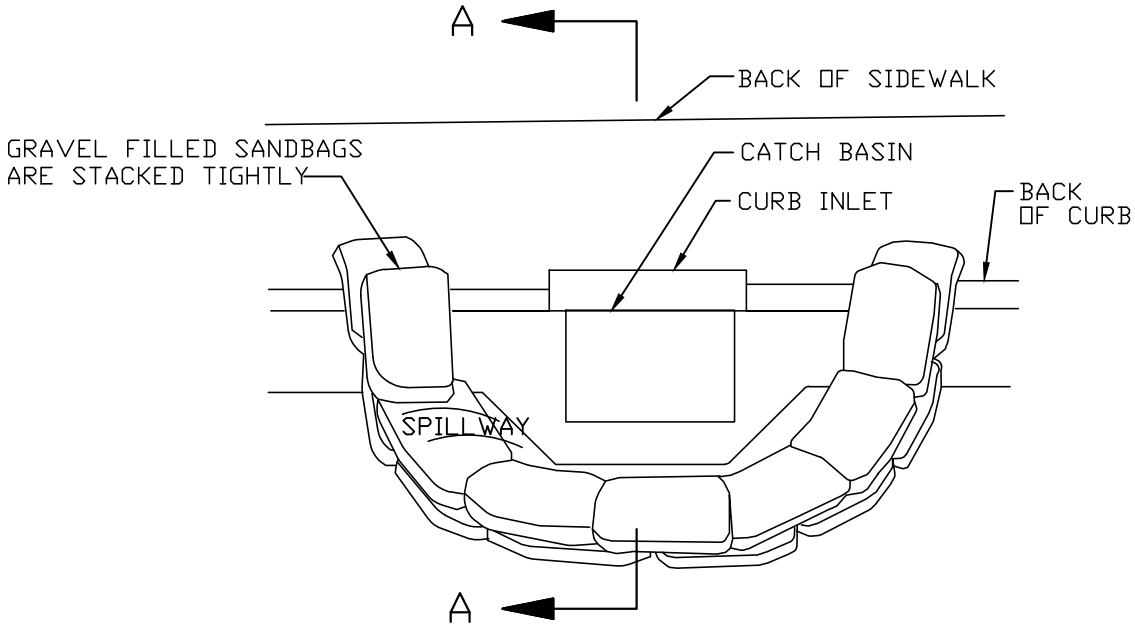

PLAN VIEW

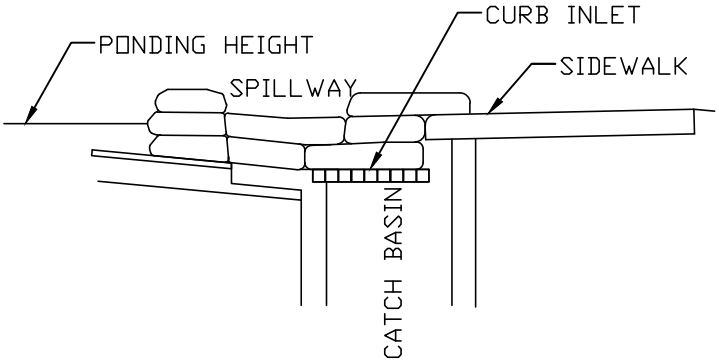

SECTION A-A

NOTES:

1. PLACE CURB TYPE SEDIMENT BARRIERS ON GENTLY SLOPING STREET SEGEMENTS, WHERE WATER CAN POND AND ALLOW SEDIMENT TO SEPARATE FROM RUNOFF.
2. SANDBAGS, OF EITHER BURLAP OR WOVEN GEOTEXTILE FABRIC, ARE FILLED WITH GRAVEL, LAYERED AND PACKED TIGHTLY.
3. LEAVE ONE SANDBAG GAP IN THE TOP ROW TO PROVIDE A SPILLWAY FOR OVERFLOW.
4. INSPECT BARRIERS AND REMOVED SEDIMENT AFTER EACH STORM EVENT. SEDIMENT AND GRAVEL MUST BE REMOVED FROM THE TRAVELED WAY IMMEDIATELY.

CURB INLET SEDIMENT BARRIER

ENGINEERING STANDARDS 2016

REVISIONS		ENGINEERING DIVISION CITY OF POMPANO BEACH	CURB INLET SEDIMENT BARRIER	
BY	DATE			DATE: MAY 2007 DWG. NO.
		SCALE: N.T.S.		507-1

J:\City-STANDARDS\2016 Standards Details\Reuse Water 5-2.dwg, 11/5/2015 12:31:26 PM

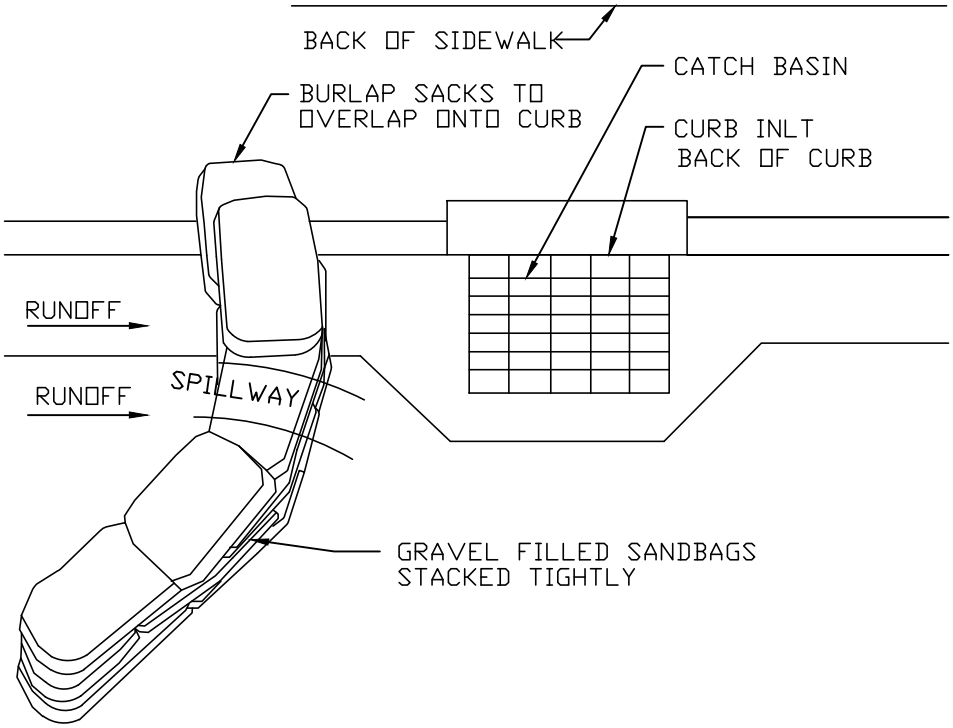

PLAN VIEW

NOTES:

1. PLACE CURB TYPE SEDIMENT BARRIERS ON GENTLY SLOPING STREET SEGMENTS, WHERE
2. WATER CAN POND AND ALLOW SEDIMENT TO SEPARATE FROM RUNOFF.
   SANDBAGS OF EITHER BURLAP OR WOVEN GEOTEXTILE FABRIC ARE FILLED WITH GRAVEL
3. LAYERED AND PACKED TIGHTLY.
4. LEAVE A ONE SANDBAG GAP IN THE TOP ROW TO PROVIDE A SPILLWAY FOR OVERFLOW.
   INSPECT BARRIERS AND REMOVED SEDIMENT AFTER EACH STORM EVENT. SEDIMENT AND GRAVEL MUST BE REMOVED FROM THE TRAVELED WAY IMMEDIATELY.

CURB AND GUTTER SEDIMENT BARRIER

ENGINEERING STANDARDS 2016

REVISIONS		ENGINEERING DIVISION CITY OF POMPANO BEACH	CURB AND GUTTER SEDIMENT BARRIER	
BY	DATE			DATE: MAY 2007 DWG. NO.
		SCALE: N.T.S.		507-2

J:\City-STANDARDS\2016 Standards Details\Reuse Water 5-2.dwg, 11/5/2015 12:32:25 PM

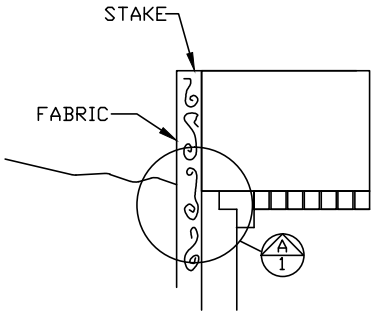

ELEVATION OF STAKE AND FABRIC ORIENTATION

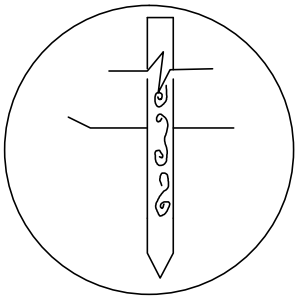

DETAIL A

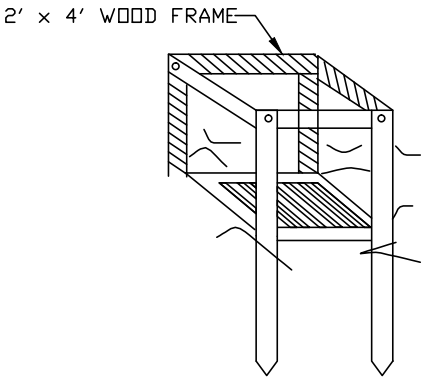

PERSPECTIVE VIEW

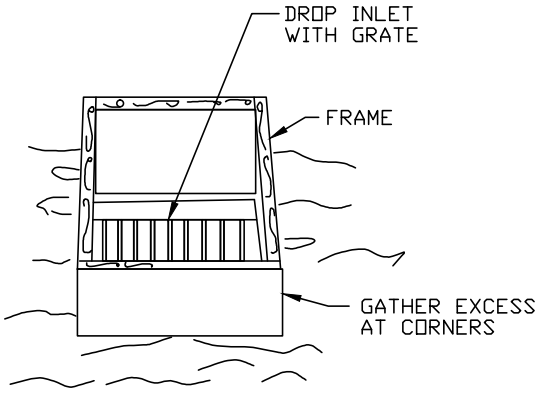

SPECIFIC APPLICATION

THIS METHOD OF INLET PROTECTION IS APPLICABLE WHERE THE INLET DRAINS A RELATIVELY FLAT AREA (SLOPE NO GREATER THAN 5%) WHERE THE INLET SHEET OR OVERLAND FLOWS (NOT EXCEDING 1 C.F.S.) ARE TYPICAL. THE METHOD SHALL NOT APPLY TO INLETS RECEIVING CONCENTRATED FLOWS, SUCH AS IN STREET OR HIGHWAY MEDIANS

FILTER FABRIC
DROP INLET SEDIMENT FILTER

ENGINEERING STANDARDS 2016

REVISIONS		ENGINEERING DIVISION CITY OF POMPANO BEACH	FILTER FABRIC DROP INLET SEDIMENT FILTER	
BY	DATE			DATE: MAY 2007 DWG. NO.
				508-1
		SCALE: N.T.S.		

J:\City-STANDARDS\2016 Standards Details\Reuse Water 5-2.dwg, 11/5/2015 12:33:12 PM

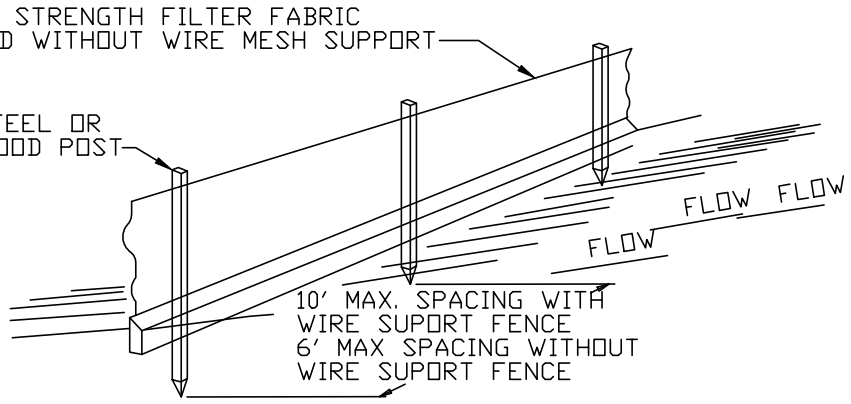

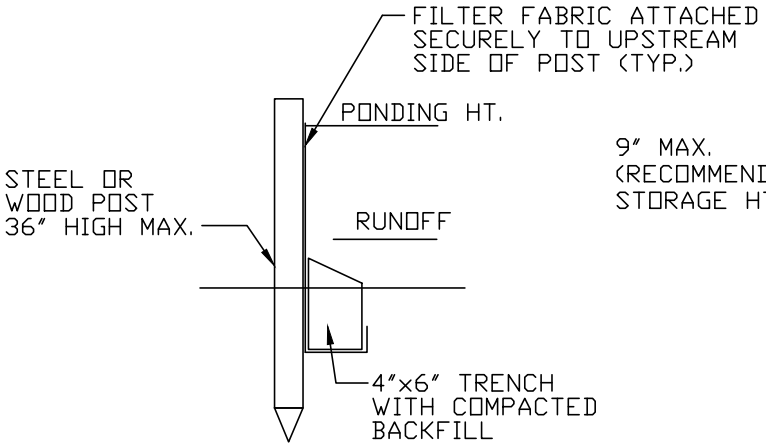

STANDARD DETAIL

TRENCH WITH NATIVE BACKFILL

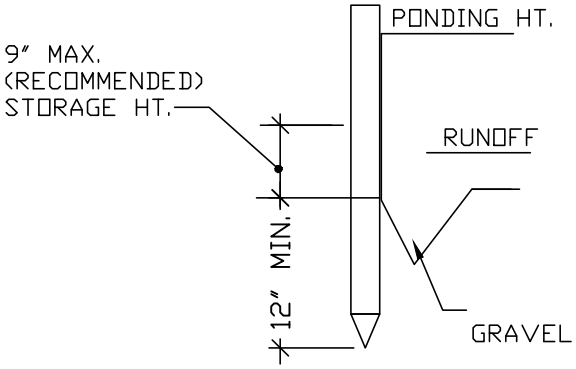

ALTERNATE DETAIL

TRENCH WITH GRAVEL

SILT FENCE

EROSION CONTROL GENERAL NOTES

1. SILT FENCE AND TURBIDITY BARRIERS MUST REMAIN IN PLACE AND BE MAINTAINED AT ALL LOCATIONS SHOWN IN THE DRAWINGS UNTIL CONSTRUCTION ID COMPLETED AND SOILS ARE STABILIZED AND VEGETATION HAS BEEN.
2. CPMTRACTOR SHALL SUBMIT SCHEDULE FOR THE INSTALLATION, INSPECTION AND MAINTENANCE THE EROSION CONTROLS FEATURES AS SHOWN IN THE DRAWINGS OR AS DIRECTED BY THE DESIGN ENGINEER. THE SCHEDULE SHALL SPECIFICALLY SHALL SPECIFICALLY INDICATE THE SEQUENCE OF CLEARING, EARTH WORK OPERATIONS, AND WHEN THE EROSION CONTROL FEATURE WILL BE INSTALLED, INSPECTED, AND MAINTAINED. IT SHALL ALSO INCLUDE METHODS TO PREVENT POLLUTION OF STREAM, LAKES, TIDAL WATERS, CANALS, AND IMPOUNDMENTS. ESTABLISHED.

ENGINEERING STANDARDS 2016

REVISIONS		ENGINEERING DIVISION CITY OF POMPANO BEACH	SILT FENCE	
BY	DATE			DATE: MAY 2007 DWG. NO.
		SCALE: N.T.S.		509-1

J:\City-STANDARDS\2016 Standards Details\Reuse Water 5-2.dwg, 11/5/2015 12:34:19 PM

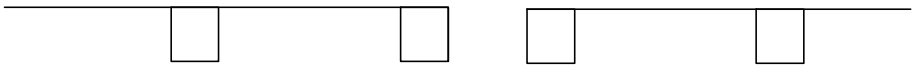

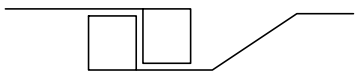

PLACE THE END POST OF THE SECOND FENCE INSIDE THE END POST OF THE FIRST FENCE.

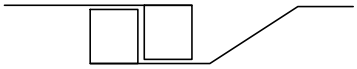

ROTATE BOTH POST AT LEAST 180 DEGREES IN A CLOCKWISE DIRECTION TO CREATE A TIGHT SEAL WITH THE FABRIC MATERIAL.

DIRECTION OF RUNOFF WATERS

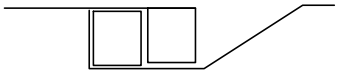

DRIVE BOTH POST ABOUT 10 INCHES INTO THE GROUND AND BURY FLAP.

NOTES:

1. INSPECT AND REPAIR FENCE AFTER EACH STORM EVENT AND REMOVE SEDIMENT WHEN NECESSARY.
2. REMOVED SEDIMENT SHALL BE DEPOSITED TO AN AREA THAT WILL NOT CONTRIBUTE SEDIMENT OFF-SITE AND CAN BE PERMANENTLY STABILIZED.
3. SILT FENCE SHALL BE PLACED ON SLOPE CONTOURS TO MAXIMIZE PONDING EFFIFIENCY.

ATTACHING TWO SILT FENCES

ENGINEERING STANDARDS 2016

REVISIONS		ENGINEERING DIVISION CITY OF POMPANO BEACH	ATTACHING TWO SILT FENCES	
BY	DATE			DATE: MAY 2007 DWG. NO.
		SCALE: N.T.S.		509-2

J:\City-STANDARDS\2016 Standards Details\Reuse Water 5-2.dwg, 11/5/2015 12:35:24 PM

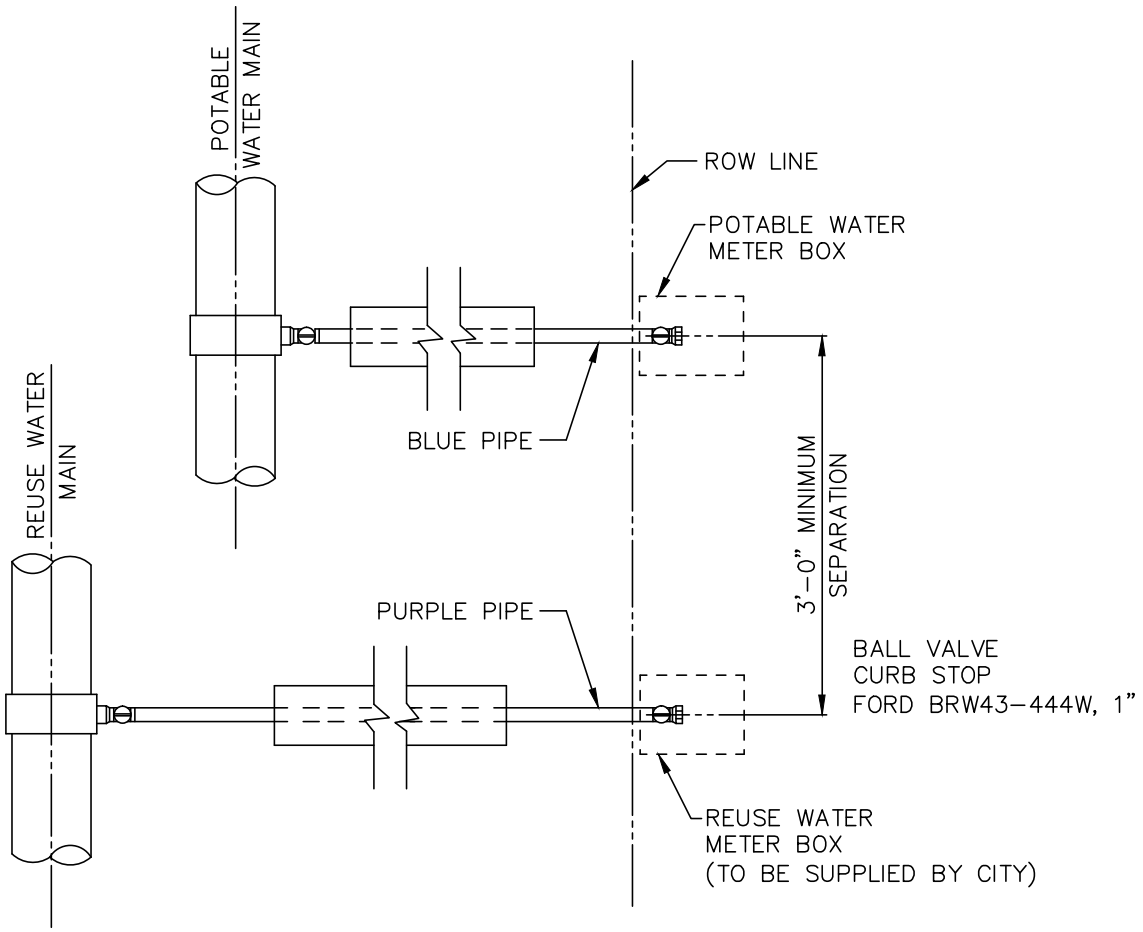

METER BOX LOCATION

ENGINEERING STANDARDS 2016

REVISIONS		ENGINEERING DIVISION CITY OF POMPANO BEACH	METER BOX LOCATION	
BY	DATE			DATE: MAY 2007
				DWG. NO.
		SCALE: N.T.S.		510-1

J:\City-STANDARDS\2016 Standards Details\Reuse Water 5-2.dwg, 11/5/2015 12:36:31 PM

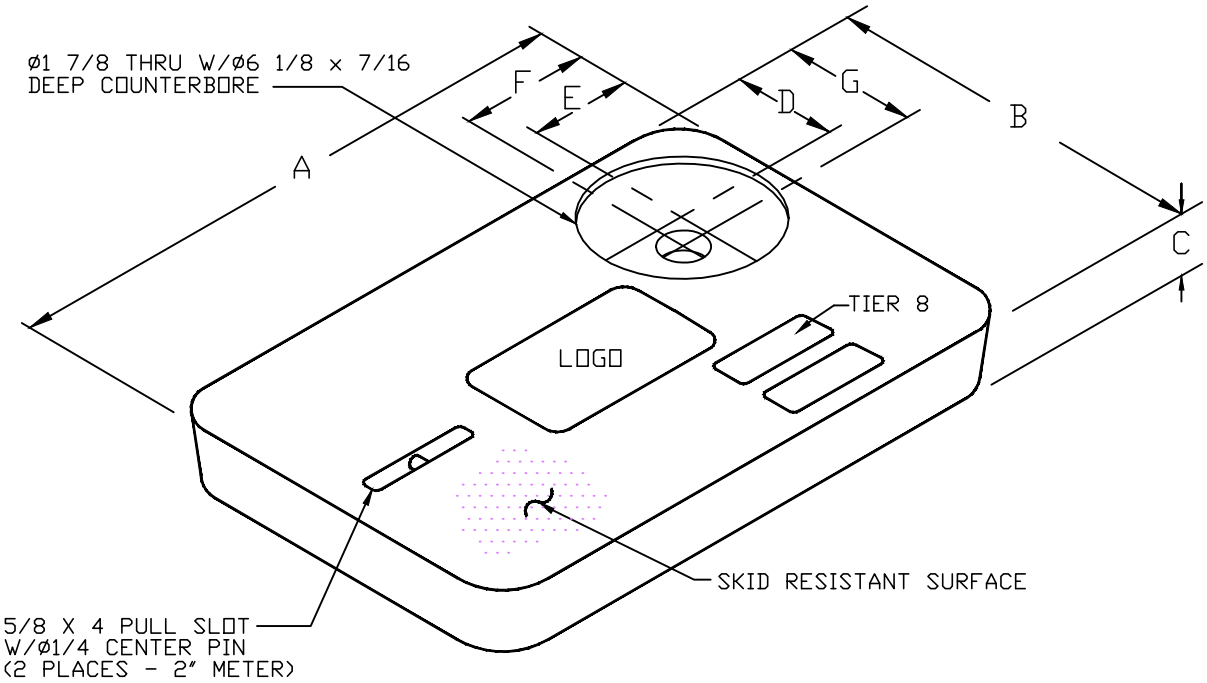

METER BOX COVER DIMENSIONS (IN)							
METER SIZE	A	B	C	D	E	F	G
3/4"	23 1/4"	13 3/4"	2"	4"	4"	4 9/16"	4 9/16"
2"	30 1/2"	17 1/2"	2"	4"	4"	4 9/16"	4 9/16"

NOTES

1. CUSTOMER IS CITY OF POMPANO BEACH FLORIDA
   LOGO TO BE SPECIFIED: REUSE WATER
   DO NOT DRINK
   NO BEBER
2. FITS NEPTUNE R450 RADIO READ
3. THIS COVER IS RATED FOR A STATIC DESIGN LOAD OF 8,000 LBS. (35,548 N) OVER A 10 (254) X 10 (254) AREA AND MUST PASS A MINIMUM STATIC TEST LOAD OF 12,000 LBS (53,376 N).
4. COVER COLOR IS PURPLE, PANTONE 522C
5. NON - SKID TEXTURED SURFACE LID
6. METER BOX COVER SHOULD BE RATED FOR TRAFFIC CONDITION AS DETERMINED BE ENGINEER OF RECORD.

TYPICAL METER BOX COVER

ENGINEERING STANDARDS 2016

REVISIONS	
BY	DATE
SS	12-2012

ENGINEERING DIVISION
CITY OF POMPANO BEACH

SCALE: N.T.S.

REUSE METER BOX COVER

DATE FEB. 2012
DWG. NO.
510-2

J:\City-STANDARDS\2016 Standards Details\Reuse Water 5-2.dwg, 11/5/2015 12:37:11 PM

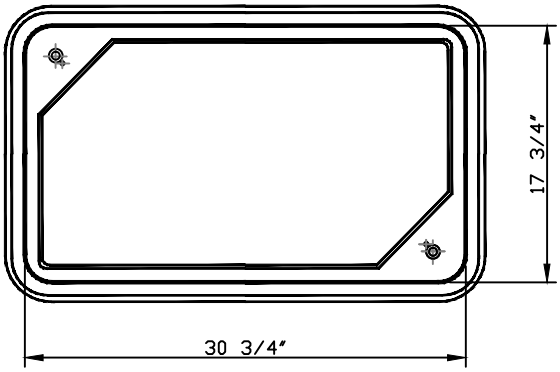

TOP VIEW

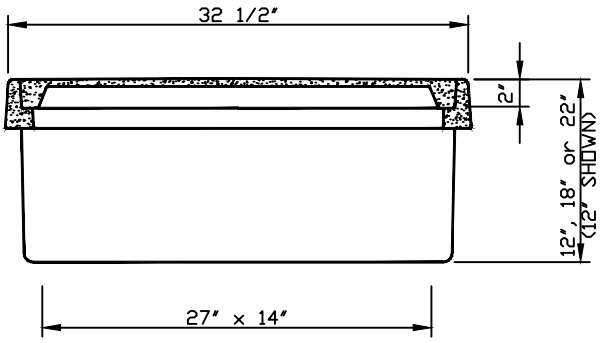

BOX & COVER SECTION

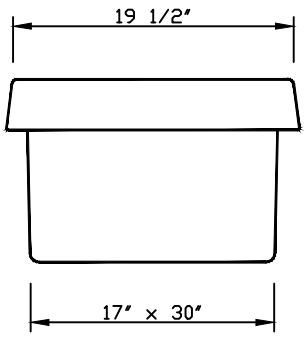

END VIEW

NOTES

1. MATERIAL: FIBERGLASS REINFORCED POLYMER CONCRETE AND FIBERGLASS REINFORCED POLYMER.
2. COVER, COLLAR AND BOX ARE COLOR PURPLE, PANTONE 522C
3. FLARED WALL BOXES ARE NESTABLE
4. NON - SKID TEXTURED SURFACE LID

17 x 30 METER STRAIGHT WALL BOX

ENGINEERING STANDARDS 2016

REVISIONS		ENGINEERING DIVISION CITY OF POMPANO BEACH	REUSE METER BOX	
BY	DATE			DATE DEC. 2012
				DWG. NO. 510-3
		SCALE: N.T.S.		

J:\City-STANDARDS\2016 Standards Details\Reuse Water 5-2.dwg, 11/5/2015 12:37:47 PM

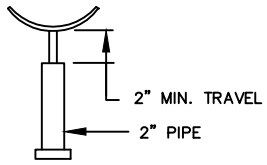

ADJUSTABLE PIPE SUPPORT PER 204-1
SANITARY DETAIL (BY CONTRACTOR OR OWNER)

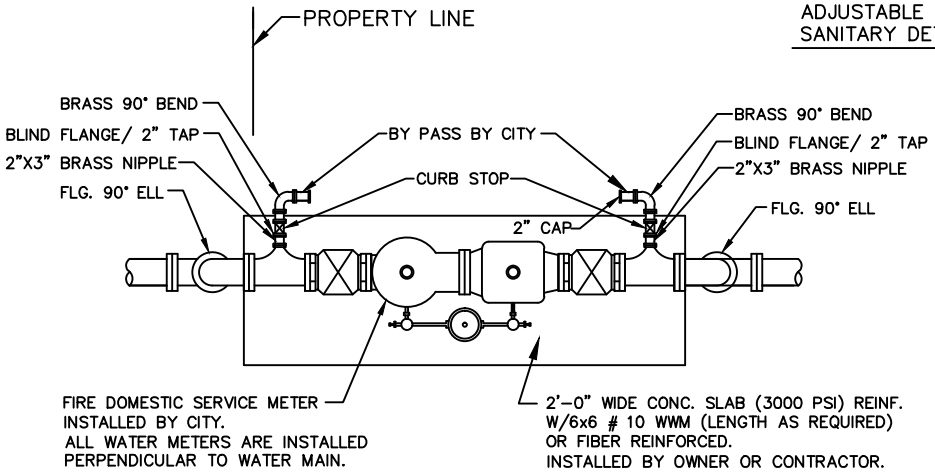

PLAN

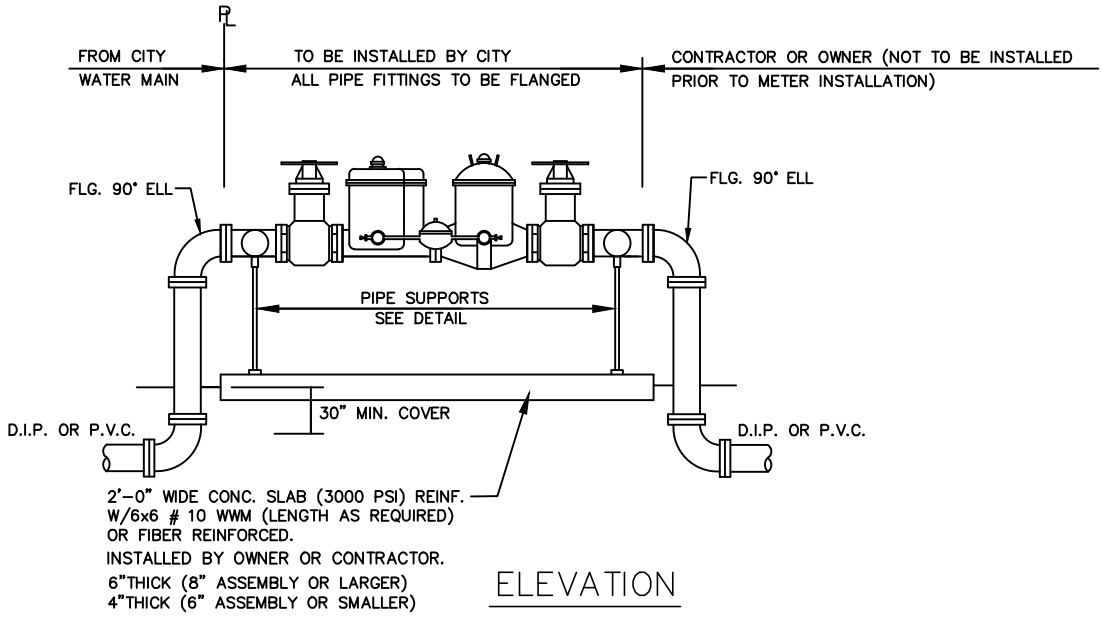

ELEVATION

MASTER METER DETAILS

NOTES:

1. METERS MUST BE PAID IN ADVANCE AS THEY ARE SUBJECT TO A LONG LEAD DELIVERY TIME. CONTACT CUSTOMER SERVICE AT 954-786-4637 TO ARRANGE FOR METER INSTALLATION.
2. USE MEGALUGS AT ALL PIPE JOINTS

ENGINEERING STANDARDS 2016

REVISIONS	
BY	DATE
S.S.	05-2012
S.S.	12-2013

ENGINEERING DIVISION
CITY OF POMPANO BEACH

SCALE: N.T.S.

REUSE MASTER METER

DATE: MAY 2012
DWG. NO. 510-4

J:\City-STANDARDS\2016 Standards Details\Reuse Water 5-2.dwg, 11/5/2015 12:38:19 PM

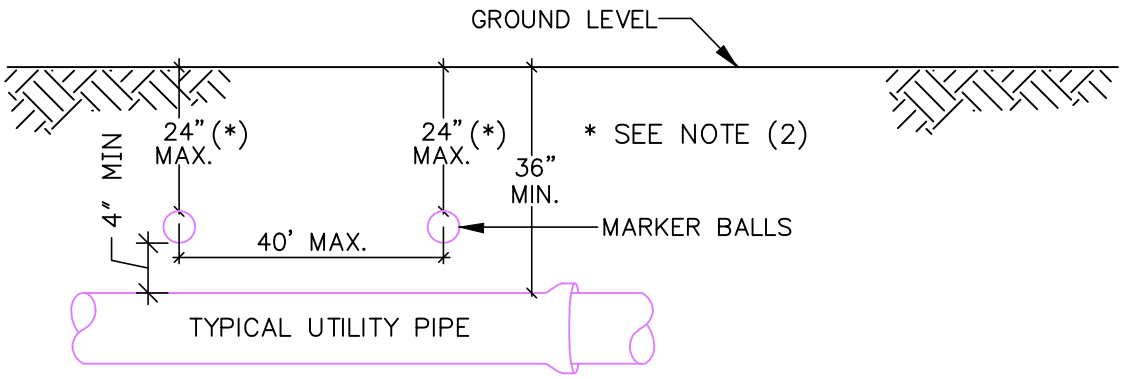

GENERAL NOTES:

1. ALL UTILITY PIPE SHALL BE INSTALLED WITH 4"ø MARKING BALLS PLACED EVERY 40' AND AT EVERY FITTING, FOR IDENTIFICATION AND WARNING PURPOSES, BURIED ABOVE THE PIPE AT A MAXIMUM DEPTH OF 24 INCHES OR AS APPROVED BY THE OWNER. IT SHALL BE COLOR CODED AND WORDED AS FOLLOWS:

   REUSE WATER.
   A. COLOR: PURPLE (PANTONE 522C)
   B. LETTERING: NON-POTABLE WATER
   C. FREQUENCY OF MARKER BALLS SHALL BE 66.35 Khz.
   D. THE MARKER BALLS CAN BE BURIED IN ANY ORIENTATION.

   THE MARKER BALLS SHALL BE DETECTABLE BY STANDARD METAL DETECTION EQUIPMENT AND SHALL BE MANUFACTURED BY TEMPO OR 3M LOCATOR SYSTEM OR EQUIVALENT (FREQUENCY 66.35 Khz)

2. FOR LARGE DIAMETER PIPE INSTALLED AT DEPTHS BELOW 4'-0" MARKER BALLS SHALL BE PLACED AT A MAXIMUM DEPTH OF 4'-0" BELOW GRADE *.

REUSE WATER PIPE IDENTIFICATION

ENGINEERING STANDARDS 2016

REVISIONS	
BY	DATE
TCW	09/07
SS	05/08

ENGINEERING DIVISION
CITY OF POMPANO BEACH

SCALE: N.T.S.

REUSE WATER PIPE IDENTIFICATION

DATE: MAY 2007
DWG. NO.
511-1

J:\City-STANDARDS\2016 Standards Details\Reuse Water 5-2.dwg, 11/5/2015 12:39:03 PM

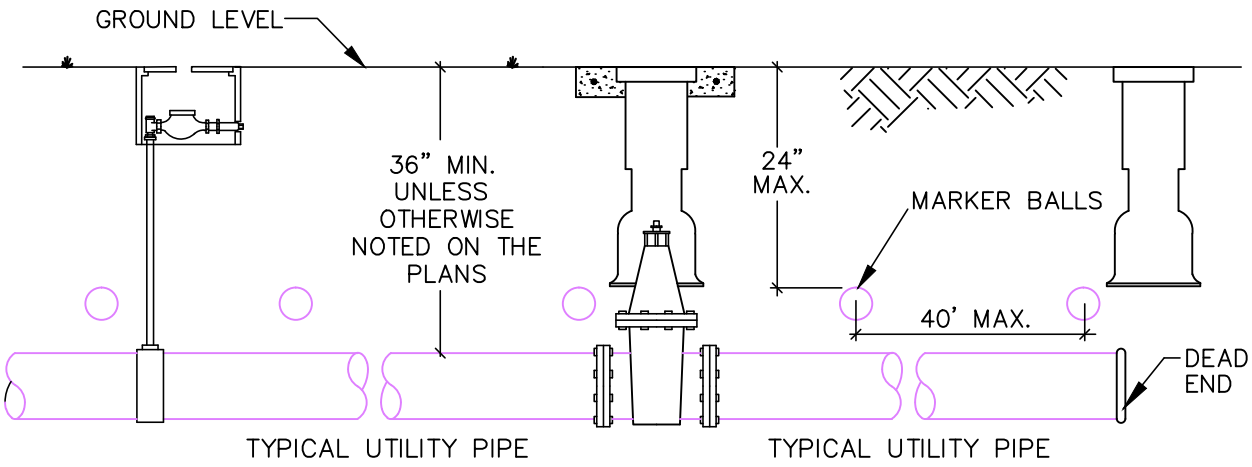

GENERAL NOTES:

1. ALL NONMETALLIC PIPE SHALL BE INSTALLED WITH 12 THHN SOLID COPPER TRACING WIRE.
2. THE MARKER BALLS MUST BE INSTALLED DIRECTLY ABOVE THE PIPE.
3. MARKER BALLS SHALL BE INSTALLED AT 40' O.C.
4. BALL COLOR CODING:
   REUSE WATER SYSTEM: PURPLE

UTILITY PIPE AND MARKER BALLS LOCATION

ENGINEERING STANDARDS 2016

REVISIONS	
BY	DATE
TCW	09/07

ENGINEERING DIVISION
CITY OF POMPANO BEACH

SCALE: N.T.S.

MARKER BALLS LOCATIONS

DATE: MAY 2007
DWG. NO.
512-1

J:\City-STANDARDS\2016 Standards Details\Reuse Water 5-3.dwg, 11/5/2015 12:42:21 PM

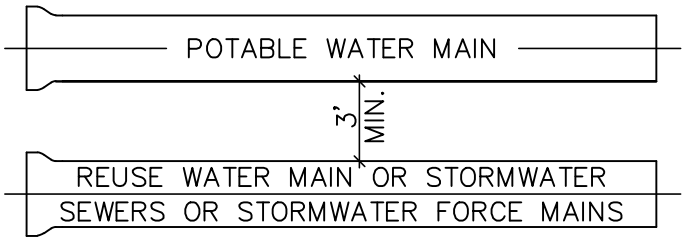

A MINIMUM HORIZONTAL SEPARATION 3' (OUTSIDE TO OUTSIDE), SHALL BE MAINTAINED BETWEEN POTABLE WATER MAINS AND STORMWATER SEWERS, STORMWATER FORCE MAINS AND REGULATED REUSE WATER MAINS.

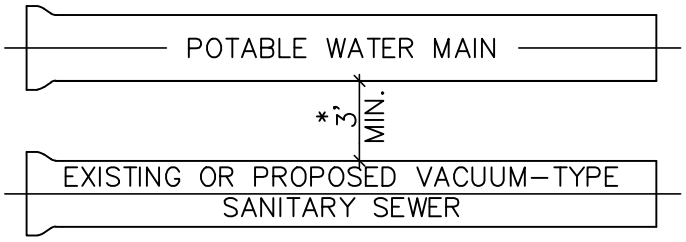

A MINIMUM HORIZONTAL SEPARATION 3' (OUTSIDE TO OUTSIDE), SHALL BE MAINTAINED BETWEEN EXISTING OR PROPOSED VACUUM-TYPE SANITARY SEWER. * SEE NOTE D(1)(B).

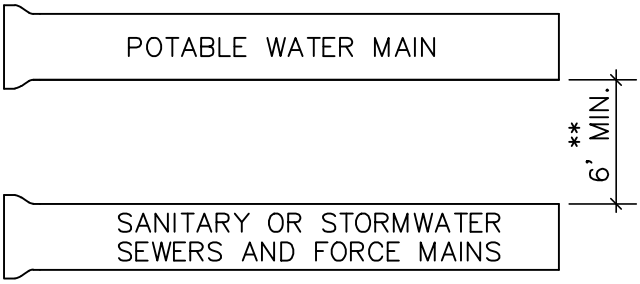

A MINIMUM HORIZONTAL SEPARATION OF 6' (OUTSIDE TO OUTSIDE), SHALL BE MAINTAINED BETWEEN POTABLE WATER MAINS AND EXISTING OR PROPOSED GRAVITY-OR PRESSURE TYPE SANITARY SEWER, WASTEWATER FORCE MAIN OR NOT REGULATED REUSE WATER MAIN. ** SEE NOTE D(1)(C).

MINIMUM HORIZONTAL SEPARATION REQUIREMENTS FOR POTABLE WATER, REUSE, STORMWATER AND SEWER LINES

ENGINEERING STANDARDS 2016

REVISIONS	
BY	DATE

ENGINEERING DIVISION
CITY OF POMPANO BEACH

SCALE: N.T.S.

MIN. HORIZONTAL SEPARATION FOR REUSE WATER

DATE: MAY 2007
DWG. NO.
513-1

J:\City-STANDARDS\2016 Standards Details\Reuse Water 5-3.dwg, 11/5/2015 12:42:55 PM

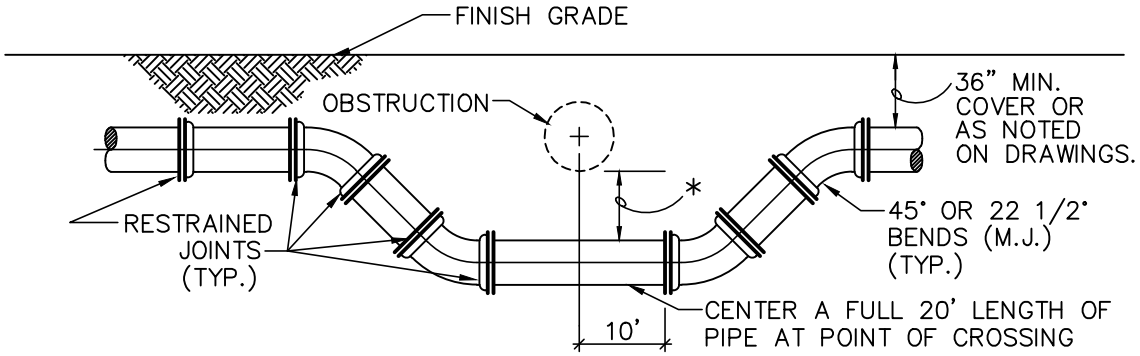

SPECIAL UTILITY CROSSING – FITTING TYPE

* 12" MINIMUM CLEARANCE REQUIRED FOR PRESSURE TYPE SANITARY SEWER, WASTEWATER OR STORMWATER FORCE MAIN OR REUSE WATER MAIN CROSSINGS. IF MINIMUM CLEARANCE CANNOT BE OBTAINED. REFER TO "PROTECTION OF POTABLE WATER SUPPLY" FOR WATER MAIN CROSSINGS. SEE NOTE 2(B), ON STANDARD NO. 514–3

6" MINIMUM CLEARANCE REQUIRED FOR WATER AND STORMWATER, SEWER MAIN CROSSINGS. SEE NOTE 2(A), ON STANDARD NO. 514–3

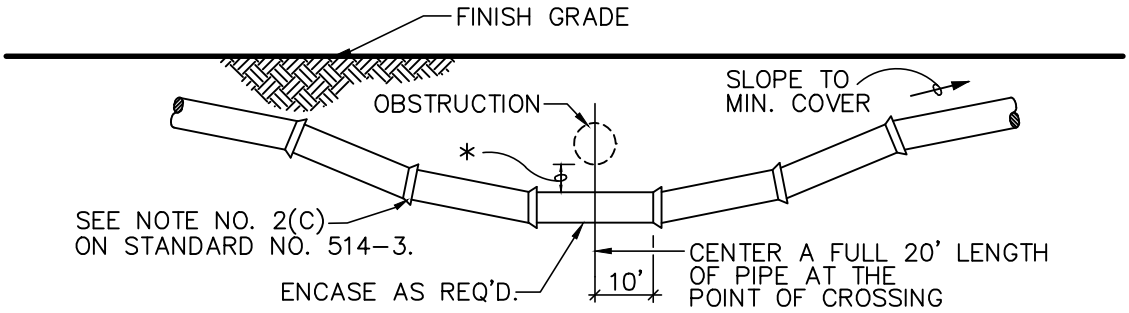

STANDARD UTILITY CROSSING – DEFLECTION TYPE

NOTES:

1. THE DEFLECTION TYPE CROSSING SHALL BE USED WHEREVER POSSIBLE. ONLY UNDER SPECIFIC ORDERS BY THE ENGINEER SHALL THE FITTING TYPE CROSSIING BE ALLOWED.
2. CONSTRUCT STANDARD CROSSING USING NO MORE THAN 75% OF MANUFACTURERS' MAXIMUM JOINT DEFLECTION.
3. FOR POTABLE WATER MAINS, REFER TO "PROTECTION OF POTABLE WATER SUPPLY".

UTILITY CROSSINGS

ENGINEERING STANDARDS 2016

REVISIONS	
BY	DATE
S.S.	1/19/12

ENGINEERING DIVISION
CITY OF POMPANO BEACH

SCALE: N.T.S.

UTILITY CROSSINGS

DATE: MAY 2007
DWG. NO.
514-1

J:\City-STANDARDS\2016 Standards Details\Reuse Water 5-3.dwg, 11/5/2015 12:43:23 PM

PROTECTION OF POTABLE WATER SUPPLY NOTES

A. GENERAL

IN ADDITION TO THESE REQUIREMENTS, ALL POTABLE WATER MAINS CONSTRUCTED IN THE VICINITY OF STORM SEWERS, SANITARY SEWERS OR FORCE MAINS SHALL COMPLY WITH THE APPLICABLE PROVISIONS OF FLORIDA ADMINISTRATIVE CODE CHAPTER 62-555, GREAT LAKES-UPPER MISSISSIPPI RIVER BOARD OF STATE SANITARY ENGINEERS (GLUMRB) "RECOMMENDED STANDARDS FOR WATER WORKS", AND GLUMRB "RECOMMENDED STANDARDS FOR WASTEWATER FACILITIES".

B. DEFINITIONS

FOR THE PURPOSES OF THIS SPECIFICATION, THE WORDS "OTHER PIPE" OR "OTHER PIPES" SHALL MEAN SANITARY SEWER MAIN, SEWAGE FORCE MAIN, STORMWATER MAIN OR ANY COMBINATION THEREOF.

C. CROSS CONNECTIONS PROHIBITED

THERE SHALL BE NO PHYSICAL CONNECTIONS BETWEEN A PUBLIC OR PRIVATE POTABLE WATER SUPPLY SYSTEM AND ANY OTHER PIPE OR APPURTENANCE THERETO WHICH WOULD PERMIT THE PASSAGE OF ANY WASTEWATER, POLLUTED WATER, OR ANY OTHER WATER INTO THE POTABLE SUPPLY. NO WATER PIPE SHALL PASS THROUGH OR COME INTO CONTACT WITH ANY PART OF A SANITARY SEWER MANHOLE OR STORMWATER MANHOLE.

D. RELATION OF OTHER PIPES TO POTABLE WATER MAINS

1. HORIZONTAL SEPARATION

A. NEW OR RELOCATED, UNDERGROUND WATER MAINS SHALL BE LAID TO PROVIDE A HORIZONTAL DISTANCE OF AT LEAST THREE FEET BETWEEN THE OUTSIDE OF THE WATER MAIN AND THE OUTSIDE OF ANY EXISTING OR PROPOSED STORM WATER, STORM WATER FORCE MAIN, OR PIPELINE CONVEYING REUSE WATER NOT REGULATED UNDER PART III OF CHAPTER 62-610,F.A.C.

B. NEW OR RELOCATED, UNDERGROUND WATER MAINS SHALL BE LAID TO PROVIDE A HORIZONTAL DISTANCE OF AT LEAST THREE FEET, AND PREFERABLY TEN FEET, BETWEEN THE OUTSIDE OF THE WATER MAIN AND THE OUTSIDE OF ANY EXISTING OR PROPOSED VACUUM-TYPE SANITARY SEWER.

C. NEW OR RELOCATED, UNDERGROUND WATER MAINS SHALL BE LAID TO PROVIDE A HORIZONTAL DISTANCE OF AT LEAST SIX FEET, AND PREFERABLY TEN FEET, BETWEEN THE OUTSIDE OF THE WATER MAIN AND THE OUTSIDE OF ANY EXISTING OR PROPOSED GRAVITY-OR PRESSURE-TYPE SANITARY SEWER, WASTEWATER FORCE MAIN, OR PIPELINE CONVEYING REUSE WATER NOT REGULATED UNDER CHAPTER 62-610, F.A.C. THE MINIMUM HORIZONTAL SEPARATION DISTANCE BETWEEN WATER MAINS AND GRAVITY TYPE SEWERS SHALL BE REDUCED TO THREE FEET WHERE THE BOTTOM OF THE WATER IS LAID AT LEAST SIX INCHES ABOVE THE TOP OF THE SEWER.

D. NEW OR RELOCATED, UNDERGROUND WATER MAINS SHALL BE LAID TO PROVIDE A HORIZONTAL DISTANCE OF AT LEAST TEN FEET BETWEEN THE OUTSIDE OF THE WATER MAIN AND ALL PARTS OF ANY EXISTING OR PROPOSED "ON-SITE SEWAGE TREATMENT AND DISPOSAL SYSTEM".

2. VERTICAL SEPARATION

A. NEW OR RELOCATED, UNDERGROUND WATER MAINS CROSSING ANY EXISTING OR PROPOSED GRAVITY-OR VACUUM-TYPE SANITARY SEWER OR STORM SEWER SHALL BE LAID SO THE OUTSIDE OF THE WATER MAIN IS AT LEAST SIX INCHES, AND PREFERABLY 12 INCHES, ABOVE OR AT LEAST 12 INCHES BELOW THE OUTSIDE OF THE OTHER PIPELINE. HOWEVER, IT IS PREFERABLE TO LAY THE WATER MAIN ABOVE THE OTHER PIPELINE.

B. NEW OR RELOCATED, UNDERGROUND WATER MAINS CROSSING ANY EXISTING OR PROPOSED PRESSURE-TYPE SANITARY SEWER, WASTEWATER OR STORM WATER FORCE MAIN, OR PIPELINE CONVEYING REUSE WATER SHALL BE LAID SO THE OUTSIDE OF THE WATER MAIN IS AT LEAST 12 INCHES, ABOVE OR BELOW THE OUTSIDE THE OTHER PIPELINE. HOWEVER, IT IS PREFERABLE TO LAY THE WATER MAIN ABOVE THE OTHER PIPELINE.

C. AT THE UTILITY CROSSINGS DESCRIBED IN PARAGRAPHS (A) AND (B) ABOVE, ONE FULL LENGTH OF WATER MAIN PIPE SHALL BE CENTERED ABOVE OR BELOW THE OTHER PIPELINE SO THE WATER MAIN JOINTS WILL BE AS FAR AS POSSIBLE FROM THE OTHER PIPELINE. ALTERNATIVELY, AT SUCH CROSSINGS, THE PIPES SHALL BE ARRANGED SO THAT ALL WATER MAIN JOINTS ARE AT LEAST THREE FEET FROM ALL JOINTS IN VACUUM-TYPE SANITARY SEWERS, STORM SEWERS, STORM WATER FORCE MAINS, OR PIPELINES CONVEYING REUSE WATER REGULATED UNDER PART III OF CHAPTER 62-610, F.A.C. AND AT LEAST SIX FEET FROM ALL JOINTS IN GRAVITY- OR PRESSURE-TYPE SANITARY SEWERS, WASTEWATER FORCE MAINS, OR PIPELINES CONVEYING REUSE WATER NOT REGULATED UNDER PART III OR CHAPTER 62-610, F.A.C.

WHERE THE HORIZONTAL CAN BEING LOCATED LESS THAT THE REQUIRED MINIMUM DISTANCES FROM JOINTS IN THE OTHER PIPELINE OR THE HORIZONTAL IS LESS THAT THREE FEET FROM ANOTHER PIPELINE OR THE UNDER GROUND WATER MAIN IS CROSSING ANOTHER PIPELINE AND IS LESS THAN THE REQUIRED MINIMUM VERTICAL DISTANCE FROM THE OTHER PIPELINE, THE CONTRACTOR SHALL CONTACT THE ENGINEER IMMEDIATELY FOR RECOMMENDED SOLUTIONS TO MEET THE FLORIDA OF DEPARTMENT OF ENVIRONMENTAL PROTECTION REQUIREMENTS PER CHAPTER 62-555, F.A.C.

PROTECTION OF POTABLE WATER SUPPLY NOTES

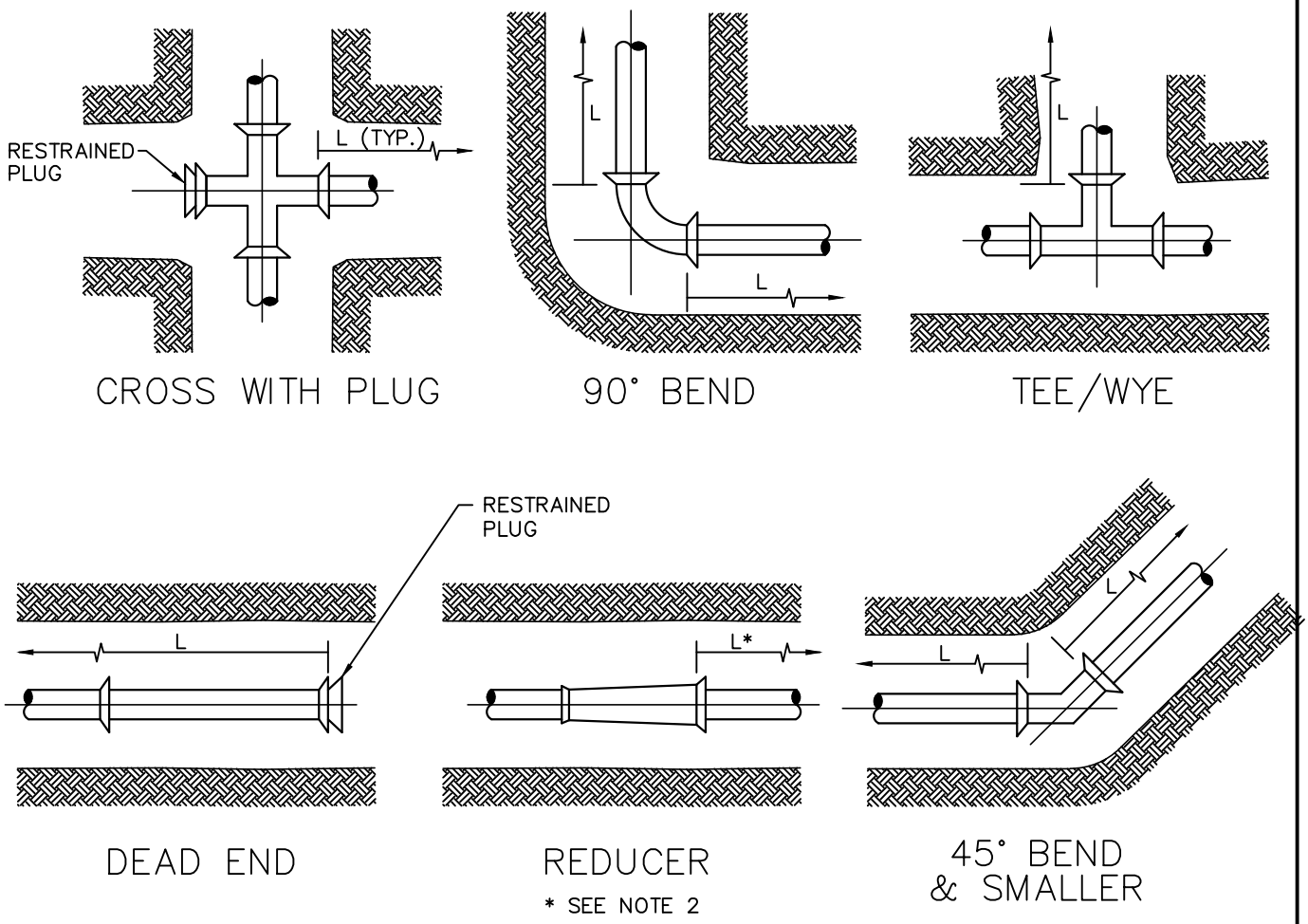

GENERAL NOTES:

1. VALUES IN TABLE ARE BASED ON 3' OF COVER, 100 PSI INTERNAL PRESSURE, FOR FORCE MAINS, 150 PSI REUSE WATER LINES, ANSI/AWWA C605 & C150/A21.50 LAYING CONDITION 3, ASTM D2487 SAND–SILT SP SOIL TYPE, AND SAFETY FACTOR OF 2.0. RESTRAINED LENGTHS WERE COMPUTED PER DIPRA "THRUST RESTRAINT DESIGN FOR DUCTILE IRON PIPE" AND "PVC PIPE THRUST RESTRAINT DESIGN HANDBOOK," EBAA IRON, INC.
2. CONFIRM THE EXACT LENGTH OF RESTRAINING REQUIRED FOR REDUCERS, PIPE ENCASED IN POLYETHYLENE AND ENCROACHING RESTRAINED LENGTHS WITH THE DESIGN ENGINEER.
3. THE CONTRACTOR IS RESPONSIBLE FOR PROPER INSTALLATION OF THE RESTRAINED JOINTS TO PREVENT MOVEMENT OF THE PIPE & FITTINGS.
4. IN THE EVENT OF A CONFLICT BETWEEN RESTRAINED LENGTHS SHOWN ON THE TABLE AND RESTRAINED LENGTHS SHOWN ON THE DRAWINGS, THE LONGEST RESTRAINED LENGTH SHALL BE USED.

ENGINEERING STANDARDS 2016

REVISIONS		ENGINEERING DIVISION CITY OF POMPANO BEACH	RESTRAINED JOINT INFORMATION	
BY	DATE			DATE: MAY 2007
				DWG. NO.
		SCALE: N.T.S.		515-1

J:\City-STANDARDS\2016 Standards Details\Reuse Water 5-3.dwg, 11/5/2015 12:45:42 PM

PVC HORIZONTAL BENDS AND VERTICAL UP BENDS

	RESTRAINED JOINT LENGTH L (MINIMUM DISTANCE IN FEET FROM FITTING – EACH WAY)				
PIPE SIZE (IN.)	BENDS				CROSS WITH PLUG / DEAD END / TEE/WYE
	90°	45°	22.5°	11.25°	
6	26	11	6	3	53
8	33	14	7	4	68
12	46	19	10	5	96

PVC VERTICAL DOWN BEND

	RESTRAINED JOINT LENGTH L (MINIMUM DISTANCE IN FEET FROM FITTING – EACH WAY)				
PIPE SIZE (IN.)	BENDS				
	90°	45°	22.5°	11.25°	
6	26	11	6	3	
8	33	14	7	4	
12	46	19	10	5	

DIP HORIZONTAL BENDS AND VERTICAL UP BENDS

	RESTRAINED JOINT LENGTH L (MINIMUM DISTANCE IN FEET FROM FITTING – EACH WAY)				
PIPE SIZE (IN.)	BENDS				CROSS WITH PLUG / DEAD END / TEE/WYE
	90°	45°	22.5°	11.25°	
12"	68	28	14	7	144
24"	119	49	24	12	258

DIP VERTICAL DOWN BEND

	RESTRAINED JOINT LENGTH L (MINIMUM DISTANCE IN FEET FROM FITTING – EACH WAY)				
PIPE SIZE (IN.)	BENDS				
	90°	45°	22.5°	11.25°	
12"	144	60	29	14	
24"	258	107	51	25	

RESTRAINED JOINT INFORMATION

ENGINEERING STANDARDS 2016

REVISIONS	
BY	DATE

ENGINEERING DIVISION
CITY OF POMPANO BEACH

SCALE: N.T.S.

RESTRAINED JOINT INFORMATION

APPROVED BY:

CITY ENGINEER

DATE: MAY 2007
DWG. NO.
515-2

J:\City-STANDARDS\2016 Standards Details\Reuse Water 5-3.dwg, 11/5/2015 12:46:14 PM

MIN. LENGTH OF PIPE (FEET) TO BE RESTRAINED
(SOURCES: EBAA IRON RESTRAINT LENGTH CALCULATION PROGRAM FOR PVC PIPE, RELEASE 3.1.
AND DIPRA THRUST RESTRAINT FOR DUCTILE IRON PIPE, RELEASE 3.2)

FITTING TYPE		PIPE SIZE								200psi			
		4"	6"	8"	10"	12"	16"	20"	24"	30"	36"	42"	48"
90° HORIZ. BEND		14	20	25	30	35	45	54	62	98	112	124	135
45° HORIZ. BEND		6	8	11	13	15	19	22	26	41	46	51	56
22.5° HORIZ. BEND		3	4	5	6	7	9	11	12	19	22	25	27
11.25° HORIZ. BEND		1	2	3	3	4	4	5	6	10	11	12	13
90° VERT. OFFSET	UPPER BEND	29	41	53	64	74	95	115	134	214	246	276	304
	LOWER BEND	7	10	13	16	19	25	30	35	57	66	74	83
45° VERT. OFFSET	UPPER BEND	12	19	24	29	34	39	48	56	89	102	114	126
	LOWER BEND	3	4	6	7	8	10	12	15	23	27	31	34
22.5° VERT. OFFSET	UPPER BEND	6	9	12	14	17	19	23	27	43	49	55	60
	LOWER BEND	1	2	4	4	4	5	6	7	11	13	15	16
11.25° VERT. OFFSET	UPPER BEND	3	4	6	7	8	9	11	13	21	24	27	30
	LOWER BEND	1	1	1	2	2	2	3	3	6	6	7	8
PLUG (DEAD END)		32	45	59	70	83	107	129	151	214	246	276	304
IN-LINE VALVE		32	45	45	45	45	56	65	80	110	125	140	155
TEE (BRANCH RESTRAINT)	4"x Ø	23	–	–	–	–	–	–	–	–	–	–	–
	6"x Ø	21	35	–	–	–	–	–	–	–	–	–	–
	8"x Ø	18	34	47	–	–	–	–	–	–	–	–	–
	10"x Ø	16	32	46	58	–	–	–	–	–	–	–	–
	12"x Ø	13	30	44	57	69	–	–	–	–	–	–	–
	16"x Ø	7	26	41	55	67	90	–	–	–	–	–	–
	20"x Ø	1	21	38	52	65	88	109	–	–	–	–	–
	24"x Ø	1	16	34	49	62	86	108	129	–	–	–	–
	30"x Ø	1	8	28	44	58	83	106	127	208	–	–	–
	36"x Ø	1	1	22	39	54	80	103	124	206	240	–	–
	42"x Ø	1	1	15	33	49	77	100	122	205	239	270	–
	48"x Ø	1	1	7	27	44	73	97	120	203	238	269	298
REDUCER (LARGER PIPE RESTRAINT)	6"x Ø	23	–	–	–	–	–	–	–	–	–	–	–
	8"x Ø	38	25	–	–	–	–	–	–	–	–	–	–
	10"x Ø	57	43	24	–	–	–	–	–	–	–	–	–
	12"x Ø	72	60	44	41	–	–	–	–	–	–	–	–
	16"x Ø	99	90	78	75	45	–	–	–	–	–	–	–
	20"x Ø	123	116	107	105	81	45	–	–	–	–	–	–
	24"x Ø	146	140	132	131	111	82	45	–	–	–	–	–
200psi	30"x Ø	209	204	197	188	177	153	116	75	–	–	–	–
	36"x Ø	243	236	233	226	217	196	168	135	74	–	–	–
	42"x Ø	273	270	265	259	252	234	211	183	133	72	–	–
	48"x Ø	301	298	294	289	283	268	249	226	183	131	71	–

NOTES:

1. THE DATA IN THE ABOVE TABLE ARE BASED UPON THE FOLLOWING INSTALLATION CONDITIONS:
   SOIL TYPE–SAND TEST PRESSURE–150 PSI/200 PSI DEPTH OF BURY–3'
   TRENCH TYPE–3 SAFETY FACTOR–1.5 VERTICAL OFFSET–3'
   MINIMUM PIPE LENGTH ALONG TEE RUN–5'
2. THE RESTRAINED PIPE LENGTHS APPLY TO DUCTILE IRON AND PVC PIPE.
3. ALL JOINTS BETWEEN UPPER AND LOWER BENDS SHALL BE RESTRAINED.
4. RESTRAINED PIPE LENGTHS APPLY TO PIPE ON BOTH SIDES OF VALVES AND FITTINGS.

RESTRAINED JOINT INFORMATION

ENGINEERING STANDARDS 2016

REVISIONS	
BY	DATE

ENGINEERING DIVISION
CITY OF POMPANO BEACH

SCALE: N.T.S.

RESTRAINED JOINT INFORMATION

DATE: FEBRUARY 2011
DWG. NO.
515-3

J:\City-STANDARDS\2016 Standards Details\Reuse Water 5-3.dwg, 11/5/2015 12:46:58 PM

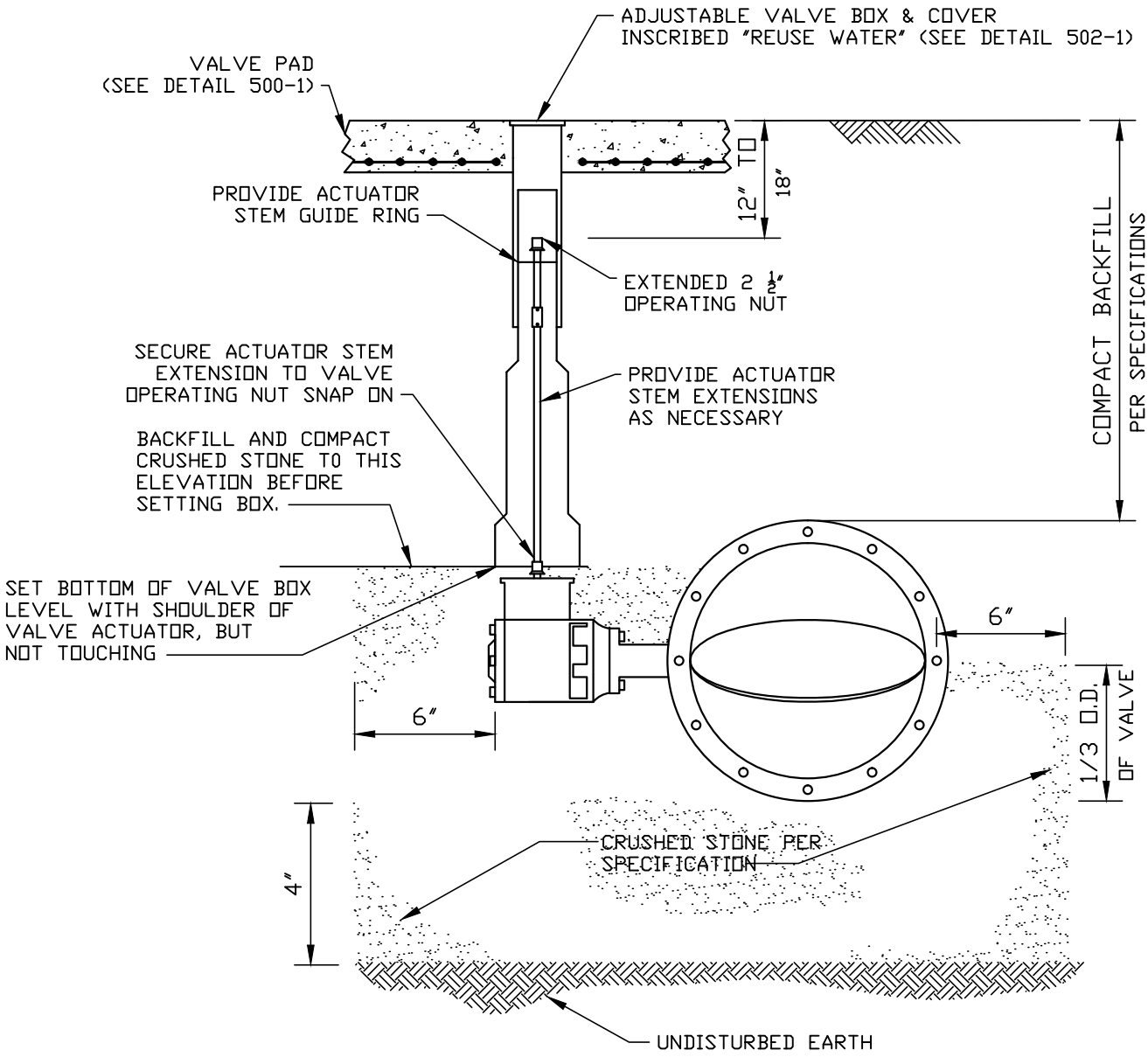

NOTES:

1. EXTENSION ON VALVE BOX SHALL BE SET SO AS TO RESERVE DIA. OF THE ADJUSTMENT LENGTH FOR FUTURE USE.
2. TO BE USED FOR ALL BURIED VALVES.

BUTTERFLY VALVE

ENGINEERING STANDARDS 2016

REVISIONS		ENGINEERING DIVISION CITY OF POMPANO BEACH	BUTTERFLY VALVE	
BY	DATE			DATE: MAY 2007
				DWG. NO.
		SCALE: N.T.S.		516-1

J:\City-STANDARDS\2016 Standards Details\Reuse Water 5-3.dwg, 11/5/2015 12:48:35 PM

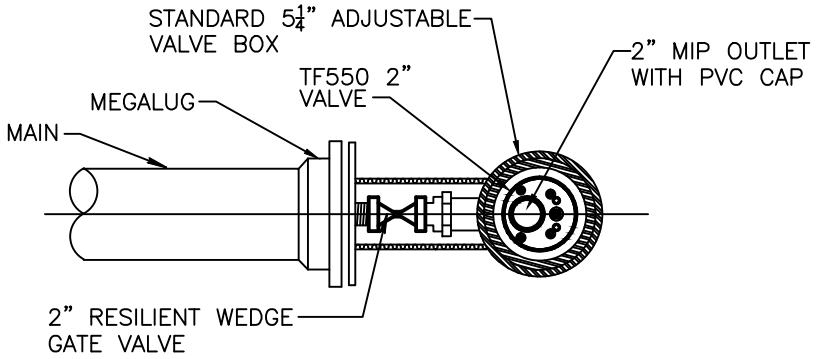

PLAN

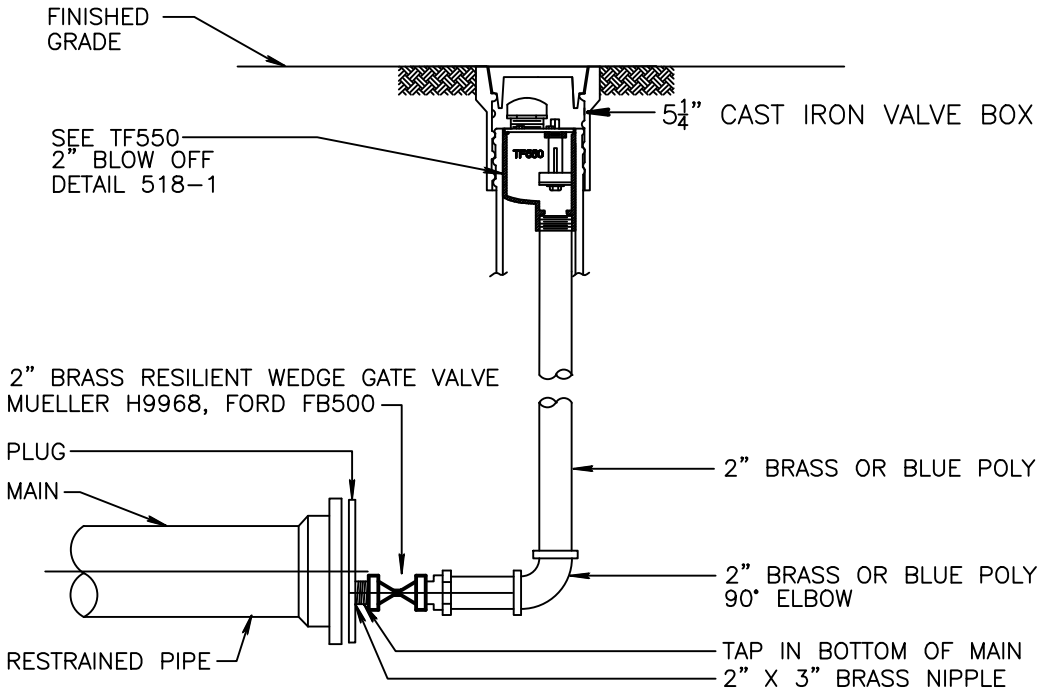

ELEVATION

NOTES:

1. ONLY BRASS OR BLUE POLY PIPING AND FITTINGS SHALL BE USED.
2. JOINT RESTRAINTS TO BE INSTALLED MIN. TWO JOINTS BEFORE DEAD END.

TYPICAL 2" TERMINAL BLOW OFF

USE MEGALUGS AT ALL PIPE JOINTS

ALL D.I.P. TO BE PAINTED BLUE ON TOP HALF OF PIPE.

ENGINEERING STANDARDS 2016

REVISIONS	
BY	DATE
S.S.	06-2005
T.W.	11-2007
T.W.	07-2008
S.S.	01/25/12

ENGINEERING DIVISION
CITY OF POMPANO BEACH

SCALE: N.T.S.

TYPICAL 2" TERMINAL BLOW OFF

DATE: JUNE 2005
DWG. NO.
517-1

J:\City-STANDARDS\2016 Standards Details\Reuse Water 5-3.dwg, 11/5/2015 12:49:21 PM

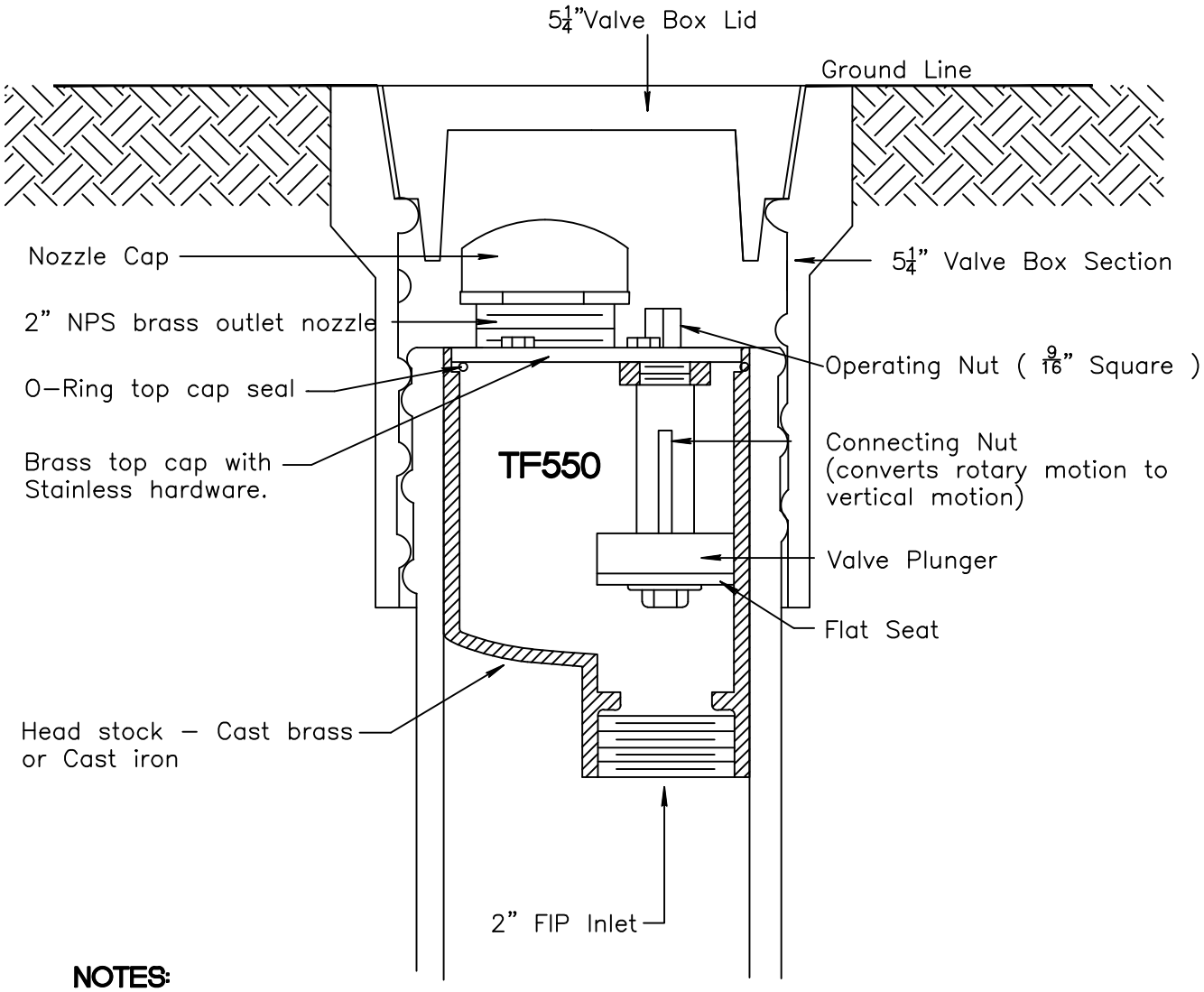

NOTES:

1. THE TF550 IS SHOWN HERE IN A TYPICAL 5-1/4" ID VALVE BOX.
2. THE TF550 IS RUGGED, COMPACT, EASY TO MAINTAIN AND ENGINEERED FOR A LIFETIME OF SERVICE.
3. THE SMALL 'FOOTPRINT" OF THE 5-1/4" VALVE BOX MAKES THE TF550 IDEAL FOR USE IN FRONT YARDS, CUL-DE-SACS AND OTHER "SPACE-SENSITIVE" INSTALLATIONS.

KUPFERLE TF550 2" BLOW OFF OR APPROVED EQUAL

ENGINEERING STANDARDS 2016

REVISIONS			
BY	DATE	ENGINEERING DIVISION CITY OF POMPANO BEACH	TF550 2" BLOW OFF FLUSHING HYDRANT
T.W.	02-2009		
S.S.	01/31/12		DATE: MAY 2007
		SCALE: N.T.S.	DWG. NO. 518-1

J:\City-STANDARDS\2016 Standards Details\Reuse Water 5-4.dwg, 11/5/2015 12:58:37 PM

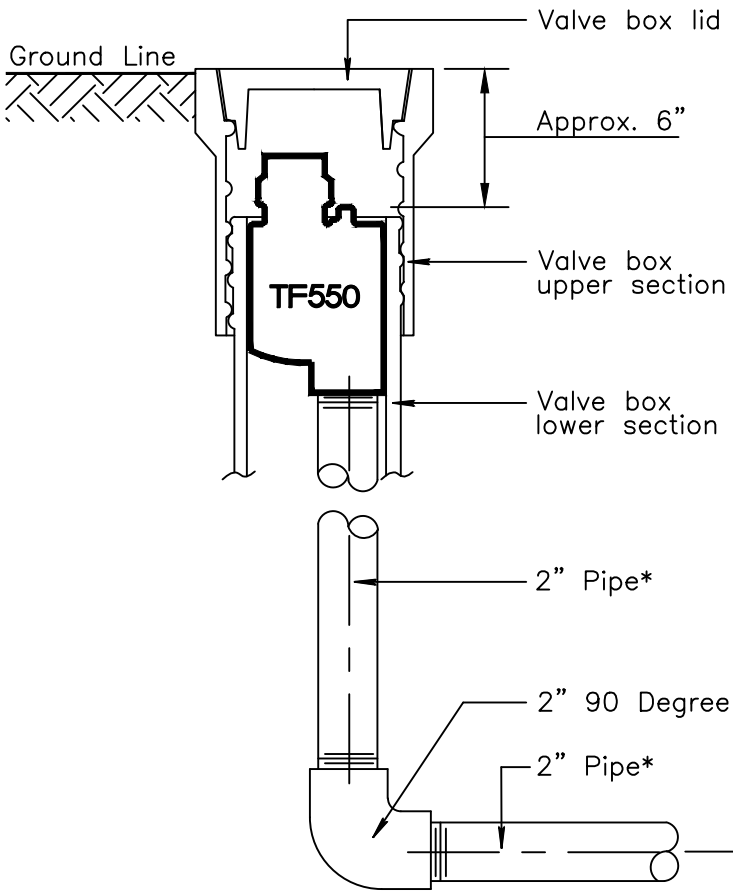

INSTALLATION NOTES

1. INSURE THAT THE HYDRANT IS FREE TO MOVE VERTICALLY WITHIN THE VALVE BOX. IN ORDER TO PREVENT THE TRANSMISSION OF TRAFFIC LOADS TO THE HYDRANT, IT SHOULD NOT BE JAMMED OR WEDGED AGAINST THE VALVE BOX ID.
2. THE NORMAL POSITION OF THE TOP OF THE OPERATING NUT IS ABOUT 6" BELOW THE TOP OF THE VALVE BOX, BUT YOU CAN FREELY ADJUST THIS POSITION TO SUIT YOUR CIRCUMSTANCES. JUST KEEP IN MIND THAT MAINTENANCE PROCEDURES ARE BEST PERFORMED WHEN THE BOLTS ATTACHING THE CAP ARE WITHIN AN EASY REACH.
3. FOLLOW THE SUGGESTIONS OF THE AWWA FOR HYDRANT INSTALLATION.

*=USER-SUPPLIED

SPECIFICATION NOTES

HYDRANT SHALL HAVE A 2" VERTICAL FIP INLET AND 2" NPT NOZZLE OUTLET. HYDRANT SHALL BE OPERATED BY TURNING A TOP-MOUNTED 9/16" SQUARE OPERATING NUT COUNTER CLOCKWISE TO OPEN, CLOCKWISE TO CLOSE. ALL INTERNAL WORKING PARTS, THE INLET AND THE OUTLET SHALL BE LOW-LEAD BRASS. ALL WORKING PARTS SHALL BE SERVICEABLE FROM ABOVE WITH NO DIGGING REQUIRED. ALL WEAR PARTS (O-RINGS AND VALVE SEAT) SHALL BE OF COMMONLY AVAILABLE DIMENSIONS AND MATERIALS, AND NONE MAY BE OF VENDOR UNIQUE DESIGN. HYDRANT SHALL BE THE TRUFLO MODEL TF550 AS MANUFACTURED BY THE KUPFERLE FOUNDRY CO., ST. LOUIS MO 63102.

TF550 INSTALLATION AND SPECIFICATION

ENGINEERING STANDARDS 2016

REVISIONS		ENGINEERING DIVISION CITY OF POMPANO BEACH	TF550 INSTALLATION AND SPECIFICATION
BY	DATE		
T.W.	02-2009		DATE: MAY 2007
			DWG. NO.
		SCALE: N.T.S.	518-2

J:\City-STANDARDS\2016 Standards Details\Reuse Water 5-4.dwg, 11/5/2015 1:02:47 PM

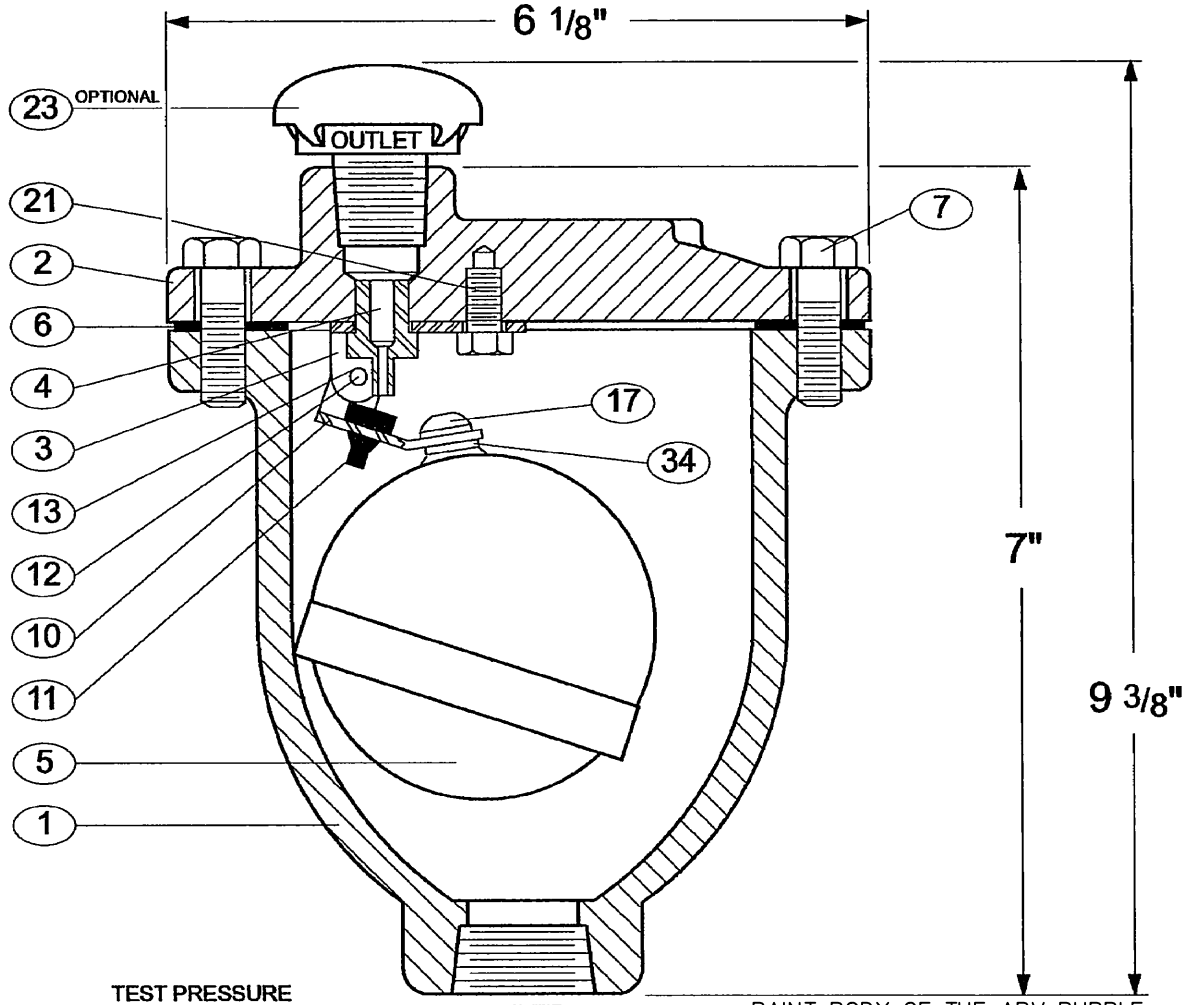

TEST PRESSURE
1.5 TIMES COLD WORKING PRESSURE-CWP

PAINT BODY OF THE ARV PURPLE USING AN EXPOXY PAINT.

SEE DRAWING NO. VM-25-M FOR STANDARD MATERIAL OF CONSTRUCTION.

VALVE SIZE *	MODEL NO. **	INLET SIZE	OUTLET SIZE	CWP P.S.I.	ORIFICE SIZE
3/4"-1"	25.5	1" N.P.T.	1/2" N.P.T.	150	1/8"
3/4"-1"	25.6	1" N.P.T.	1/2" N.P.T.	300	3/32"

*When multiple size inlets are indicated for a specific model number, the valve is threaded for the largest size indicated and a reducer bushing is provided for the smaller sizes.

**Add "H" to Model No. for optional screened hood SPK-5H.

1	BODY	11	ORIFICE BUTTON
2	COVER	12	PIVOT PIN
3	LEVER FRAME	13	PIN RETAINER (NOT SHOWN)
4	SEAT	17	FLOAT RETAINER
5	FLOAT	21	LOCATOR
6	GASKET	23	SCREENED HOOD
7	COVER BOLT	34	LOCK WASHER
10	FLOAT ARM		

Revision 4-13-04

ENGINEERING STANDARDS 2016

REVISIONS		ENGINEERING DIVISION CITY OF POMPANO BEACH	VM-25 AIR RELEASE VALVE	
BY	DATE			DATE: MAY 2007
				DWG. NO.
		SCALE: N.T.S.		519-1

J:\City-STANDARDS\2016 Standards Details\Reuse Water 5-4.dwg, 11/5/2015 1:03:45 PM

AIR RELEASE VALVE

SERIES NO. 25

STANDARD MATERIALS OF CONSTRUCTION

PART NO.	PART NAME	MATERIAL
1	BODY	CAST IRON ASTM A126, CLASS B
2	COVER	CAST IRON ASTM A126, CLASS B
3	LEVER FRAME	STAINLESS STEEL T316, ASTM A240
4	SEAT	STAINLESS STEEL T316, ASTM A276
5	FLOAT	STAINLESS STEEL T316, ASTM A240
6	GASKET	COMPRESSED NON-ASBESTOS FIBER
7	COVER BOLT	ALLOY STEEL SAE, GRADE 5
10	FLOAT ARM	STAINLESS STEEL T316, ASTM A240
11	ORIFICE BUTTON	VITON
12	PIVOT PIN	STAINLESS STEEL T316, ASTM A479
13	PIN RETAINER	STAINLESS STEEL PH 15-7 MO
17	FLOAT RETAINER	STAINLESS STEEL T316, ASTM F879
21	LOCATOR	STAINLESS STEEL T316, ASTM F593
34	LOCK WASHER	STAINLESS STEEL T316, ASTM A240

VM-25-M MATERIAL OF CONSTRUCTION

NOTE:
ALL SPECIFICATIONS AS LAST REVISED.

Revised 1-29-03

ENGINEERING STANDARDS 2016

REVISIONS		ENGINEERING DIVISION CITY OF POMPANO BEACH	VM-25 AIR RELEASE VALVE MATERIALS OF CONSTRUCTION	
BY	DATE			DATE: MAY 2007
				DWG. NO.
		SCALE: N.T.S.		519-2

J:\City-STANDARDS\2016 Standards Details\Reuse Water 5-4.dwg, 11/5/2015 1:05:13 PM

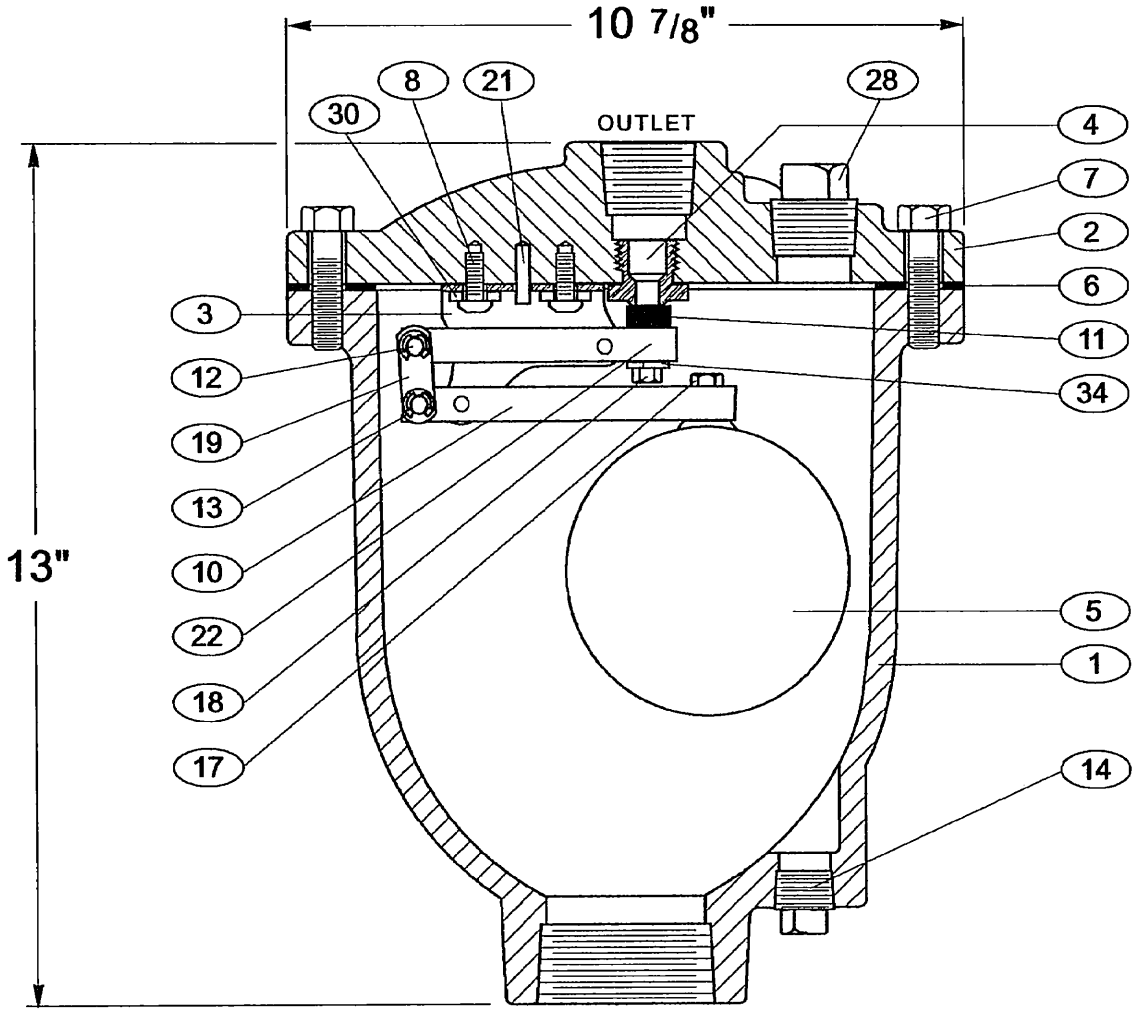

TEST PRESSURE
1.5 TIMES COLD WORKING PRESSURE-CWP

PAINT BODY OF THE ARV PURPLE USING AN EXPOXY PAINT.

SEE DRAWING NO. VM-50-M FOR STANDARD MATERIAL OF CONSTRUCTION.

VALVE SIZE	MODEL NO.	INLET SIZE	OUTLET SIZE	CWP P.S.I.	ORIFICE SIZE
2"	50	2" N.P.T.	1" N.P.T.	500	7/32"
2"	50HP	2" N.P.T.	1" N.P.T.	1000	1/8"

1	BODY	8	RETAINING SCREW	18	LOCK NUT
2	COVER	10	FLOAT ARM	19	LINK
3	LEVER FRAME	11	ORIFICE BUTTON	21	LOCATING PIN
4	SEAT	12	PIVOT PIN	22	ORIFICE BUTTON ARM
5	FLOAT	13	RETAINING RING	28	PIPE PLUG
6	GASKET	14	PIPE PLUG	30	WASHER
7	COVER BOLT	17	FLOAT RETAINER	34	LOCK WASHER

Revised 4-13-98

ENGINEERING STANDARDS 2016

REVISIONS		ENGINEERING DIVISION CITY OF POMPANO BEACH	VM-50 AIR RELEASE VALVE	
BY	DATE			DATE: MAY 2007
				DWG. NO.
		SCALE: N.T.S.		519-3

J:\City-STANDARDS\2016 Standards Details\Reuse Water 5-4.dwg, 11/5/2015 1:05:50 PM

AIR RELEASE VALVE

MODEL NOS. 50 & 50HP

STANDARD MATERIALS OF CONSTRUCTION

PART NO.	PART NAME	MATERIAL
1	BODY (MODEL 50)	CAST IRON ASTM A126, CLASS B
1	BODY (MODEL 50HP)	DUCTILE IRON ASTM A536, GRADE 65-45-12
2	COVER (MODEL 50)	CAST IRON ASTM A126, CLASS B
2	COVER (MODEL 50HP)	DUCTILE IRON ASTM A536, GRADE 65-45-12
3	LEVERAGE FRAME	STAINLESS STEEL T316, ASTM A240
4	SEAT	STAINLESS STEEL T316, ASTM A582
5	FLOAT	STAINLESS STEEL T316, ASTM A240
6	GASKET	COMPRESSED NON-ASBESTOS FIBER
7	COVER BOLT	ALLOY STEEL SAE, GRADE 5
8	RETAINING SCREW	STAINLESS STEEL T316, ASTM F879
10	FLOAT ARM	STAINLESS STEEL T316, ASTM A582
11	ORIFICE BUTTON	STAINLESS STEEL & BUNA-N
12	PIVOT PIN	STAINLESS STEEL T316, ASTM A276
13	RETAINING RING	STAINLESS STEEL PH 15-7 MO
14	PIPE PLUG	STEEL
17	FLOAT RETAINER	STAINLESS STEEL T316, ASTM F593
18	LOCK NUT	STAINLESS STEEL T316, ASTM F594
19	LINK	STAINLESS STEEL T316, ASTM A240
21	LOCATING PIN	STAINLESS STEEL T420
22	ORIFICE BUTTON ARM	STAINLESS STEEL T316, ASTM A582
28	PIPE PLUG	STEEL
30	WASHER	STAINLESS STEEL T316, ASTM A240
34	LOCK WASHER	STAINLESS STEEL T316, ASTM A240

VM-50-M MATERIAL OF CONSTRUCTION

NOTE:
ALL SPECIFICATIONS AS LAST REVISED.

Revised 3-17-06

ENGINEERING STANDARDS 2016

REVISIONS			
BY	DATE	ENGINEERING DIVISION CITY OF POMPANO BEACH	VM-50 AIR RELEASE VALVE MATERIALS OF CONSTRUCTION
		SCALE: N.T.S.	DATE: MAY 2007 DWG. NO. 519-4

J:\City-STANDARDS\2016 Standards Details\Reuse Water 5-4.dwg, 11/5/2015 1:07:35 PM

APPROVED PRODUCT LIST

Valve Boxes & Risers: Valve boxes shall either be a **Tyler** or **Turnbull** riser specified or an Approved equal which shall meet the following standards:

- The gap between the cover/lid and the ring that is visible when installed must be no greater than 0.11 inches.
- The wall thickness of the ring that encircles the cover/lid shall have a wall thickness of no less than 0.65 inches.
- The valve box top shall weigh no less than 22 pounds.
- The valve box bottom shall weigh no less than 27 pounds.
- The valve box lid shall weigh no less than 11 pounds.
- The 1" riser shall weight 6 pounds, 2" 9.5 pound, 3" 14 pounds and 4" 20 pounds.
- The valve box lid shall be a non - locking design with two indentations to allow for easy removal.
- The brand of valve box bid shall have an option extension kit. The weight of the extension kits shall be +/- 29 lbs for 14 inches, +/- 30 lbs for 18 inches and +/- 37 lbs for 24 inches.
- Recognizing that some manufacturers may make conforming and non - conforming boxes, or risers vendors bidding such a manufacturer are advised to avoid shipping the incorrect part. The City reserves the right to return ***at any time*** any box delivered that is non - conforming. If the non - conforming box was installed, the vendor will be responsible for the cost of removal and installation of the conforming box. Depending on the severity and frequency of this type of oversight bidders may be restricted from future bids.

DIP Fittings: Mega lugs and their accessory kits shall be as manufactured by **EBAA Iron, Inc.** or an approved equal which shall meet the following Standards:

- Each gland shall include one mechanical restraining gland as manufactured by EBAA Iron, Inc, Series 1100, or equal, sacrificial zinc anode hex head caps of one - half of the number of T- head bolts in each gland pack, one rubber gasket and the proper number of T - head bolts and nuts for the mechanical joint sizes shown on the order.

- For sizes 4 to 12 inches, package all gland materials to make one joint and mark each package to specify its weight and contents.

- Each gland shall be clearly marked with a "batch serial number". The "batch serial number" will allow the utility to identify the date of manufacture, plant and identify what ladle of metal was used to cast the gland . The vendor must be able to provide metallurgical reports for any specific gland based on the "batch serial number" that must be cast into the gland. The "batch serial number" must not be encoded and easily converted using common methods, such as the Julian Day.

- Each restraining gland shall have the following weights and have no less than the number wedges listed below. All wedges will be "auto - torquing" or designed such that the nut on the actuating bolt will separate at the manufacturers intended torque for to properly set the wedge. After being set, the actuating bolts will have a smaller remaining head that will allow for the disassembly of the joint.

Size	Minimum Weight	Number of Wedges	¾" Bolt Length
4	7	2	4
6	12	3	4
8	16	3	4.5
10	24	6	4.5
12	33	8	4.5

- The restraining gland shall be properly prepared and coated with a TGIC polyester - based coating. The gripping wedges and actuating bolts shall be properly prepared and coated with a Xylan Flourpolymer coating.

Offsets, Couplings etcetera shall be as manufactured by **Tyler Products**
Or an approved equal which shall meet the following standards:

The equivalent to the ELLS, 45, offsets, couplings, etcetra that are called for in various bids shall be the Tyler Product line. Equivalents shall have the same dimensions, bolt counts and certifications as the Tyler product line.

Flange Adapters shall be as manufactured by Uniflang or EZ Flange or
An approved equal whish shall meet the following standards:

- Each fitting shall be clearly marked with a "batch serial number. The "batch serial number" will allow the utility to identify the date of manufacture, plant and identify what ladle of metal was used to cast the gland. The vendor must be able to provide metallurgical reports for any specific fitting based on the "batch serial number" that must be cast into the gland. The "batch serial number" must not be encoded and easily converted using common methods, such as the Julian Day.

- Each restraining fitting shall have the weights listed below.

- Set bolts will be "auto - torquing" or designed such that the nut on the actuating bolt will separate at the manufacturers intended torque for to properly set the wedge. After being set, the actuating bolts will have a smaller remaining head that will allow for the disassembly of the joint.

Size	Minimum Weight
4	6.3
6	8.8
8	12.9
10	23.1
12	29.5

- The fitting shall be properly prepared and coated with a TGIC polyester - based coating. The gripping wedges and actuating bolts shall be properly prepared and coated with a Xylan Flourpolymer coating.

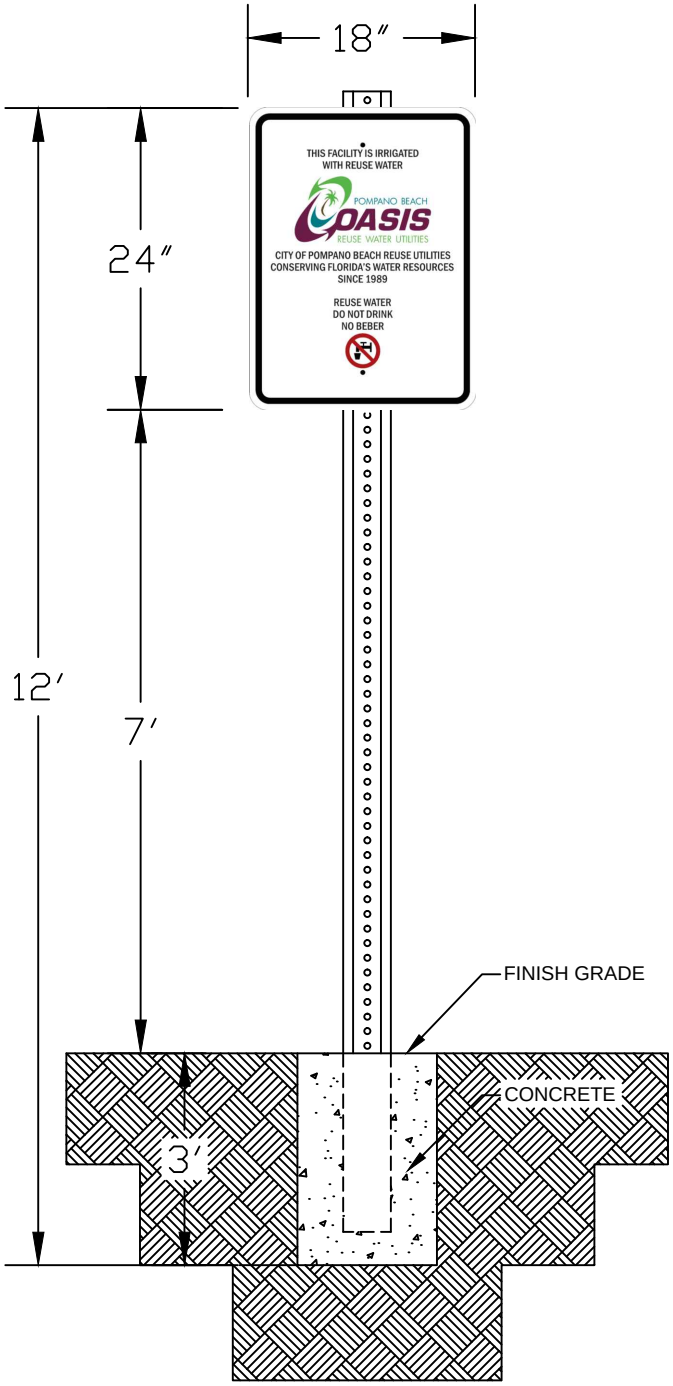

EXAMPLE OF A
REUSE WATER SIGN

REUSE WATER SIGN

ENGINEERING STANDARDS 2016

REVISIONS	
BY	DATE
T.W.	10–2010

ENGINEERING DIVISION
CITY OF POMPANO BEACH

SCALE: N.T.S.

REUSE WATER SIGN

DATE: 10/19/10
DWG. NO.
521-1

J:\City-STANDARDS\2016 Standards Details\Reuse Water 5-4.dwg, 11/5/2015 1:09:52 PM

STANDARD DETAILS - 2016
REUSE WATER

VALVE BOX SETTINGS	500–1
VALVE BOX SETTING FOR GATE (WITH OUT GEAR OPERATION)	501–1
UNDERGROUND VALVE IDENTIFICATION MARKER	502–1
TYPICAL UTILITY CONFLICT	503–1
TRENCH BACKFILL/BEDDING AND NOTES	504–1 TO 504–4
SURFACE RESTORATION	505–1
TYPICAL 1" AND 2" REUSE WATER SERVICE	506–1, 506–2
CURB INLET SEDIMENT BARRIER	507–1
CURB AND GUTTER SEDIMENT BARRIER	507–2
FILTER FABRIC DROP INLET SEDIMENT FILTER	508–1
SILT FENCE	509–1
ATTACHING TWO SILT FENCES	509–2
METER BOX LOCATION	510–1
METER BOX COVER	510–2
METER STRAIGHT WALL BOX	510–3
MASTER METER	510–4
REUSE WATER PIPE IDENTIFICATION	511–1
PIPE AND MARKER BALLS LOCATION	512–1
MIN. HORIZONTAL SEPARATION FOR REUSE WATER.	513–1
UTILITY CROSSINGS AND GENERAL NOTES	514–1 TO 514–3
RESTRAINED JOINT INFORMATION	515–1 TO 515–3
BUTTERFLY VALVE	516–1
TYPICAL 2" TERMINAL BLOW OFF	517–1
TF550 2" BLOW OFF FLUSHING HYDRANT/ INSTALLATION AND SPECIFICATION	518–1 TO 518–2
VM–25 AIR RELEASE VALVE AND MATERIALS	519–1 TO 519–2
VM–50 AIR RELEASE VALVE AND MATERIALS	519–3 TO 519–4
APPROVED PRODUCTS LIST	520–1 TO 520–3
REUSE WATER SIGN	521–1

J:\City-STANDARDS\2016 Standards Details\Standards 2016.dwg, 11/4/2015 4:10:00 PM