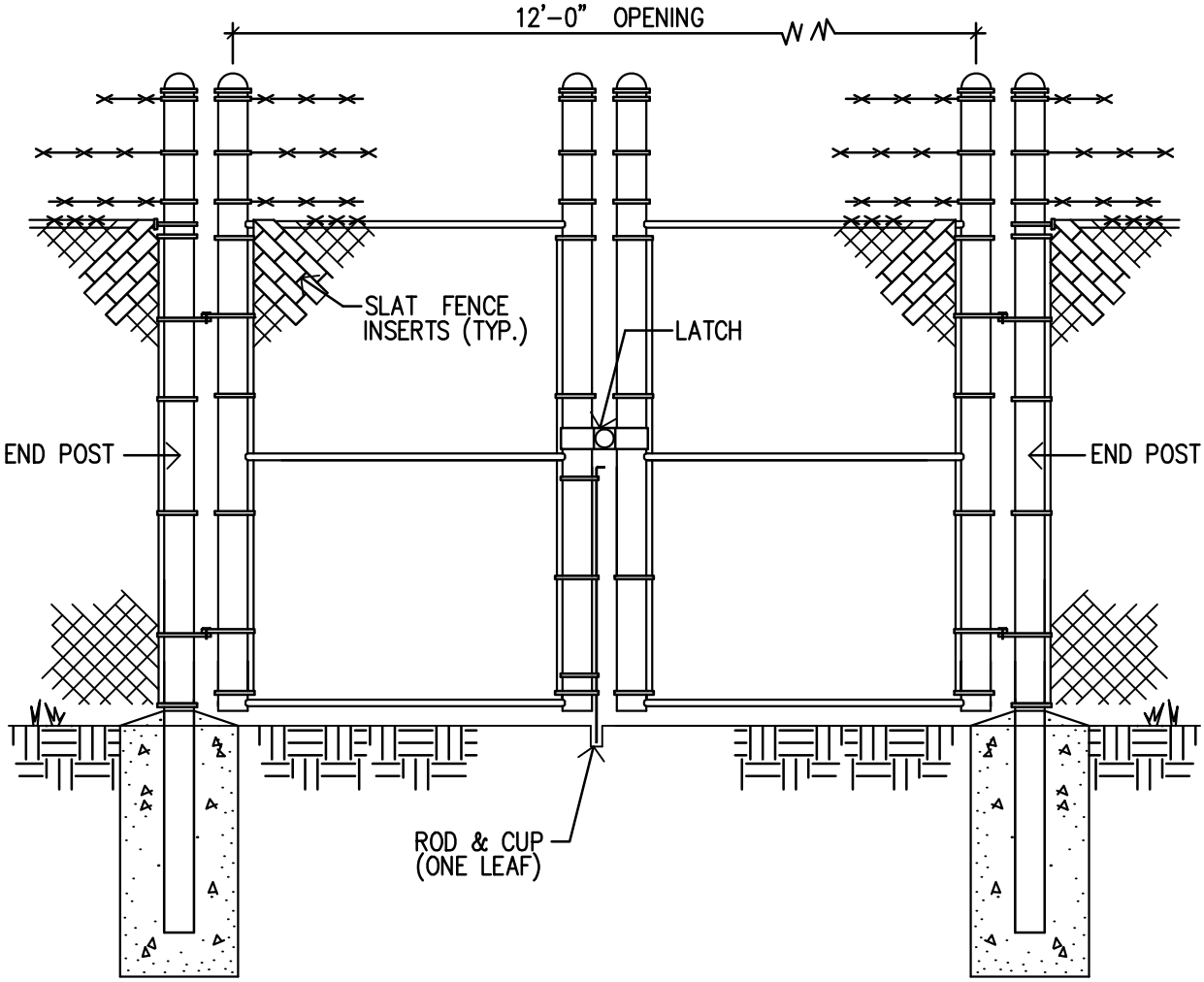

DOUBLE LEAF GATE

CHAIN LINK FENCE INSTALLATION DETAILS

ENGINEERING STANDARDS 2015

REVISIONS	
BY	DATE
S.S.	5-8-00

ENGINEERING DIVISION
CITY OF POMPANO BEACH

SCALE: N.T.S.

CHAIN LINK FENCE

DATE: MAY 2000
DWG. NO.
303-1

J:\City-STANDARDS\Misc. 3-2.dwg, 11/24/2014 3:02:58 PM