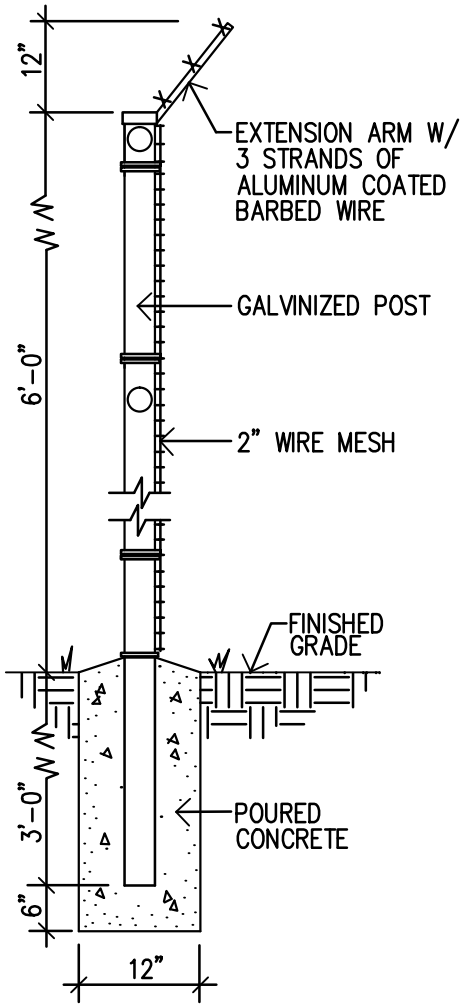

TYPICAL FENCE POST

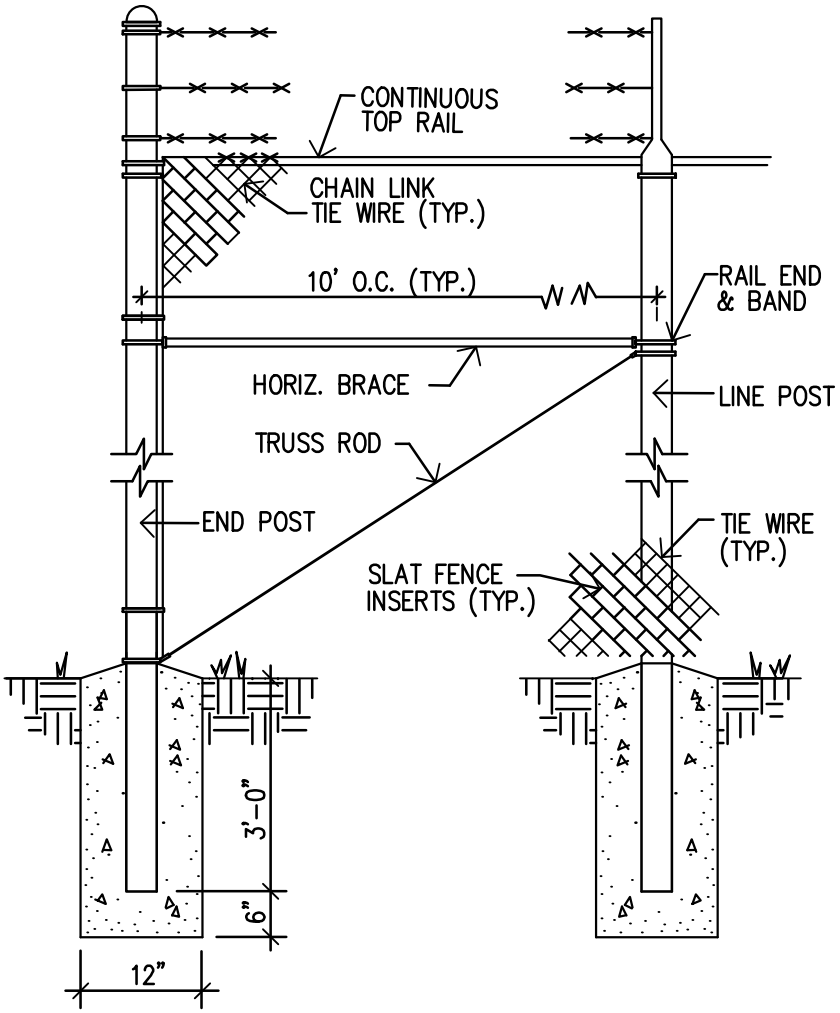

TYPICAL FENCE

CHAIN LINK FENCE INSTALLATION DETAILS

ENGINEERING STANDARDS 2015

REVISIONS	
BY	DATE
S.S.	5-4-00

ENGINEERING DIVISION
CITY OF POMPANO BEACH

SCALE: N.T.S.

CHAIN LINK FENCE

DATE: MAY 2000
DWG. NO.
303-2

J:\City-STANDARDS\Misc. 3-2.dwg, 11/24/2014 3:04:32 PM