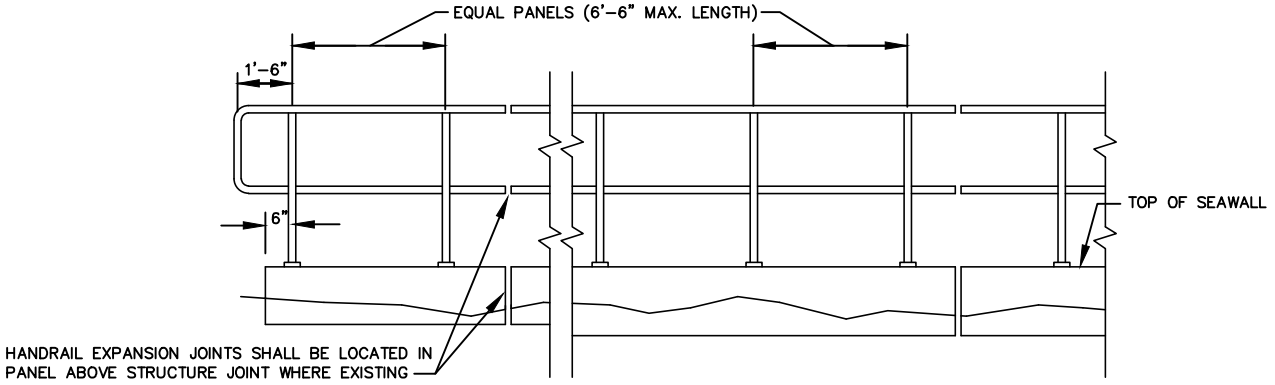

ELEVATION

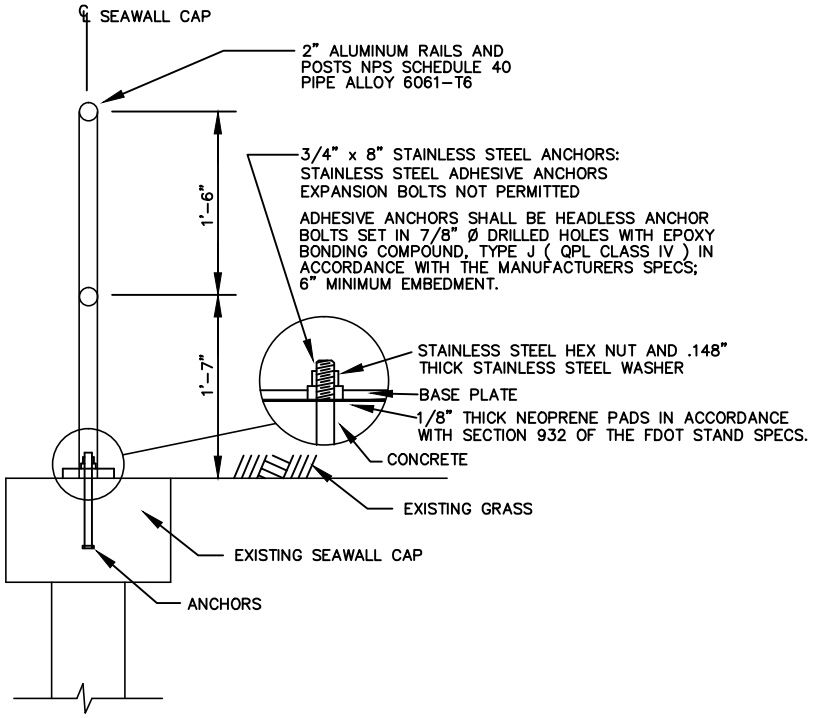

TYPICAL SECTION AT POST

MOUNT ON SEAWALL SHOWN

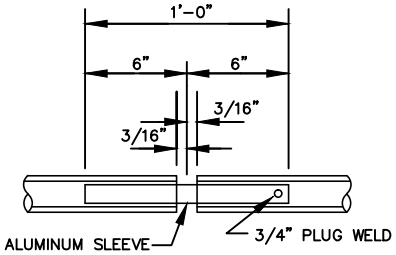

EXPANSION JOINT

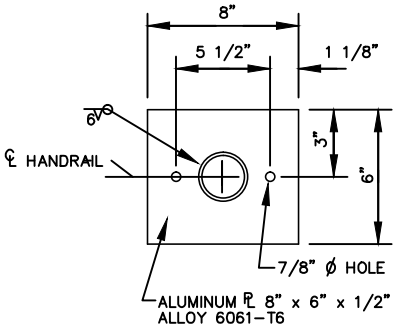

BASE PLATE

PIPE HAND RAIL NOTES

1. ALL FIXED JOINTS TO BE EITHER WELDED ALL AROUND AND GROUND SMOOTH; OR, COMMERCIALLY DESIGNED FIXED JOINT SYSTEMS (SOLDERED, BRAZED, FUSED, BONDED OR SHRINK FITTED) SPECIFIED ON THE PLANS OR APPROVED BY THE ENGINEER. MECHANICAL JOINTS OTHER THAN EXPANSION JOINTS ARE NOT PERMITTED UNLESS SPECIFIED ON THE PLANS OR APPROVED IN WRITING BY THE ENGINEER. POSTS SHALL BE CONNECTED TO BASE BY WELD ONLY. WELD FILLER TO BE ALLOY ER5356, ER5556 OR ER5183.
2. ANCHOR BOLTS SHALL BE IN ACCORDANCE WITH ASTM A36 OR A307. NUTS, WASHERS, AND BOLTS TO BE STAINLESS STEEL IN CONFORMANCE WITH ASTM A153. AFTER THE NUTS HAVE BEEN TIGHTENED, THE ANCHOR BOLT THREADS SHALL BE DISTORTED OR THE NUTS AND BOLTS SPOT WELDED AND COATED WITH ZINC COMPOUND.
3. ALUMINUM HANDRAIL SHALL BE CONSTRUCTED IN ACCORDANCE WITH SECTION 515 OF THE FDOT STANDARD SPECIFICATIONS. PAYMENT SHALL BE FULL COMENSATION FOR FURNISHING AND INSTALLING HANDRAIL, INCLUDING MOUNTING HARDWARE, AND SHALL BE PAID FOR UNDER THE CONTRACT UNIT PRICE FOR PIPE HANDRAIL (ALUMINUM), MI.

ALUMINUM PIPE HANDRAIL

ENGINEERING STANDARDS 2015

REVISIONS	
BY	DATE
S.S.	1/31/12

ENGINEERING DIVISION
CITY OF POMPANO BEACH

SCALE: N.T.S.

ALUMINUM PIPE HANDRAIL

DATE: MAY 2001
DWG. NO.
308-1

J:\City-STANDARDS\Misc. 3-3.dwg, 11/24/2014 3:13:44 PM