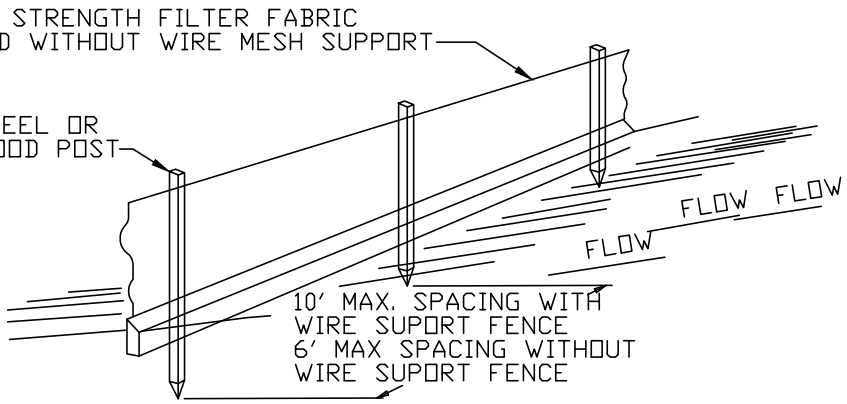

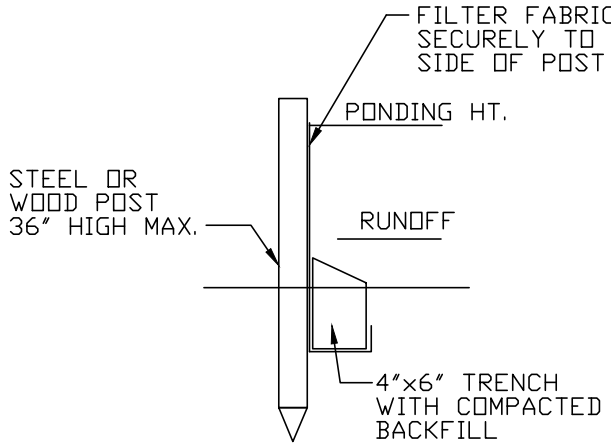

STANDARD DETAIL

TRENCH WITH NATIVE BACKFILL

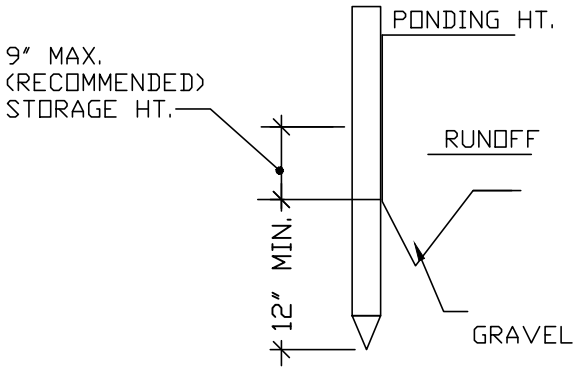

ALTERNATE DETAIL

TRENCH WITH GRAVEL

SILT FENCE

EROSION CONTROL GENERAL NOTES

1. SILT FENCE AND TURBIDITY BARRIERS MUST REMAIN IN PLACE AND BE MAINTAINED AT ALL LOCATIONS SHOWN IN THE DRAWINGS UNTIL CONSTRUCTION ID COMPLETED AND SOILS ARE STABILIZED AND VEGETATION HAS BEEN.
2. CPMTRACTOR SHALL SUBMIT SCHEDULE FOR THE INSTALLATION, INSPECTION AND MAINTENANCE THE EROSION CONTROLS FEATURES AS SHOWN IN THE DRAWINGS OR AS DIRECTED BY THE DESIGN ENGINEER. THE SCHEDULE SHALL SPECIFICALLY SHALL SPECIFICALLY INDICATE THE SEQUENCE OF CLEARING, EARTH WORK OPERATIONS, AND WHEN THE EROSION CONTROL FEATURE WILL BE INSTALLED, INSPECTED, AND MAINTAINED. IT SHALL ALSO INCLUDE METHODS TO PREVENT POLLUTION OF STREAM, LAKES, TIDAL WATERS, CANALS, AND IMPOUNDMENTS. ESTABLISHED.

ENGINEERING STANDARDS 2015

REVISIONS			
BY	DATE	ENGINEERING DIVISION CITY OF POMPANO BEACH	SILT FENCE
			DATE: MAY 2007 DWG. NO.
		SCALE: N.T.S.	509-1

J:\City-STANDARDS\Reuse Water 5-2.dwg, 11/24/2014 3:46:46 PM