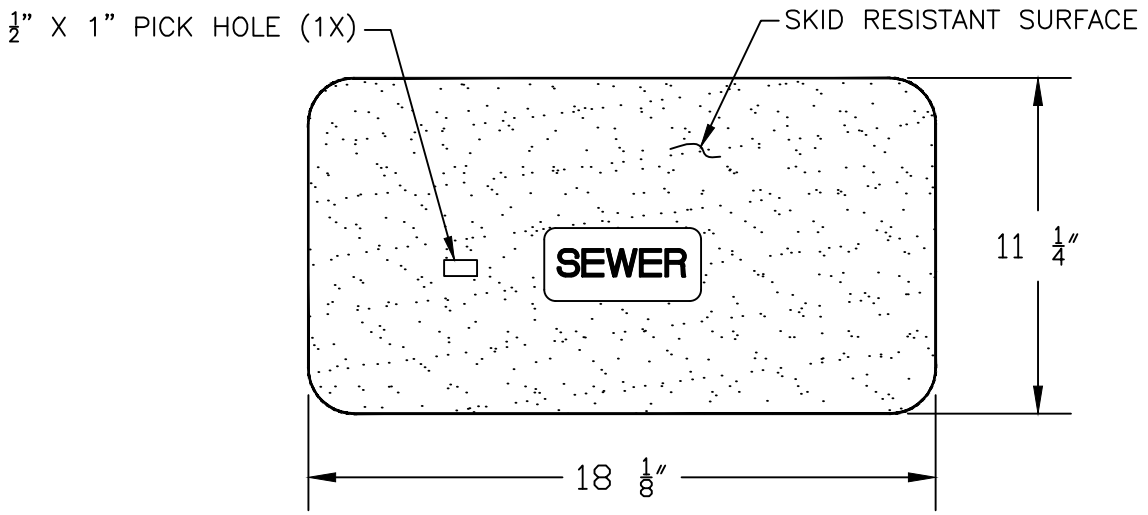

TOP VIEW

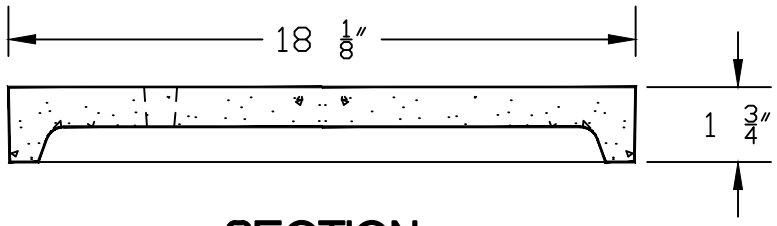

SECTION

NOTE

1. MATERIAL: FIBERGLASS REINFORCED POLYMER CONCRETE & FIBERGLASS REINFORCED POLYMER
2. COLOR: GREEN
3. LOAD RATING: A8 (ASTM C857)
4. LOGO: SEWER

SEWER BOX AND COVER

PRODUCT RATING - NON TRAFFIC

LOAD DESIGNATION	DESCRIPTION	DESIGN LOADS			TESTING	
		LIVE LB/WHEEL (2)	LIVE + IMPACT LB/WHEEL	SIDE PSF (3)	LOAD,LBS	SAFETY FACTOR
AASHTO H10	LIGHT TRUCK TRAFFIC	8,000	10,400	N/A	22,568 (4)	2.82

ENGINEERING STANDARDS 2015

REVISIONS		ENGINEERING DIVISION CITY OF POMPANO BEACH	SEWER BOX AND COVER CDR Part No. WB03-1118-12 CDR Part No. WC00-1118-02	
BY	DATE			DATE: AUGUST 2007
				DWG. NO.
		SCALE: N.T.S.		210-1

J:\City-STANDARDS\Sanitary 2-2.dwg, 11/24/2014 2:23:45 PM