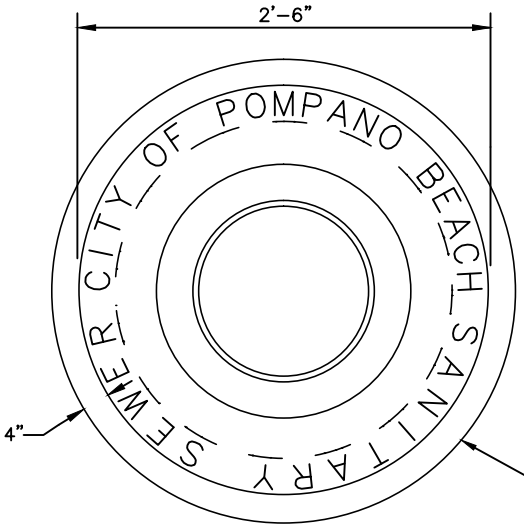

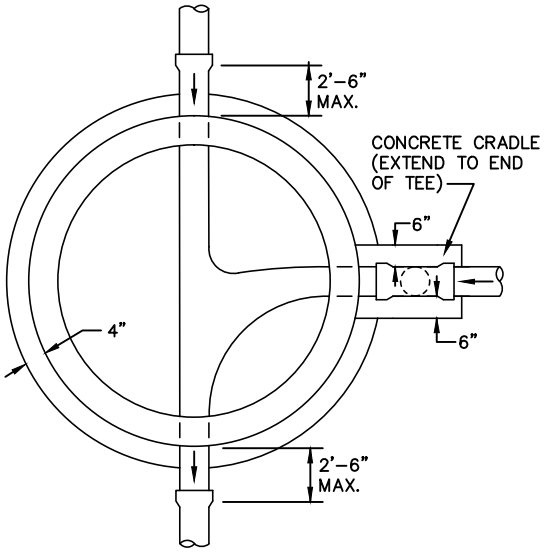

SECTION A-A

STANDARD CAST IRON MANHOLE FRAME AND COVER U.S. FOUNDARY AND MFG. CORP. DRAWING NO. 420 OR APPROVED EQUAL. TYPE "C" COVER WITH PLASTIC RAIN GUARD. STAMP WITH "CITY OF POMPANO BEACH" AND "SANITARY SEWER".

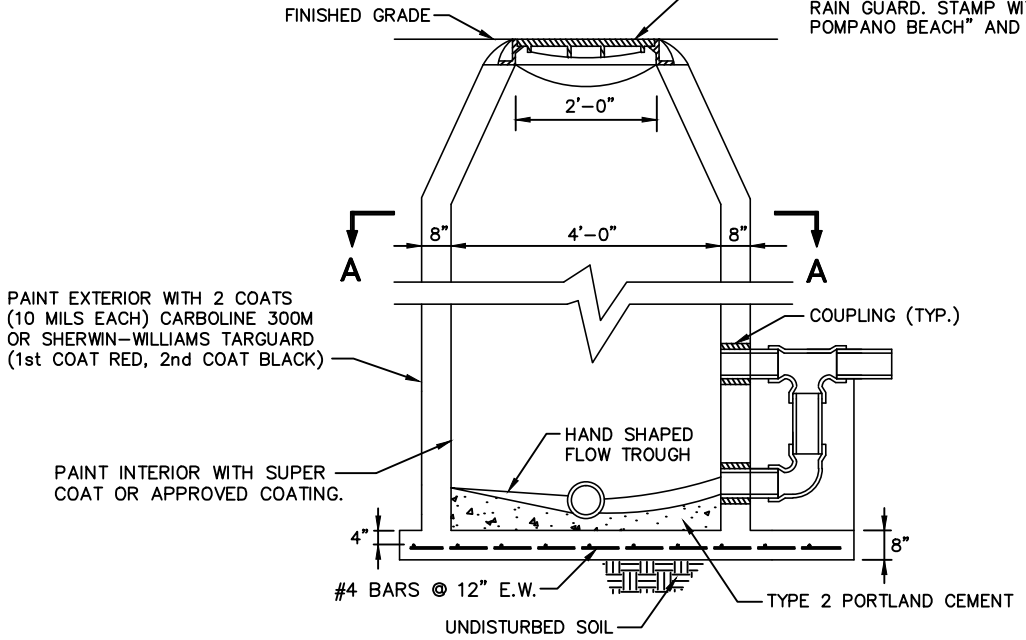

TYPE "A" DROP MANHOLE

TO BE USED WHERE DROP IS 2 FEET OR MORE

ENGINEERING STANDARDS 2015

REVISIONS	
BY	DATE
S.S.	JUNE 2005
T.W.	11-2007
S.S.	12-2013

ENGINEERING DIVISION
CITY OF POMPANO BEACH

SCALE: N.T.S.

TYPE "A" DROP MANHOLE

DATE: JUNE 1996
DWG. NO.
213-1

J:\City-STANDARDS\Sanitary 2-3.dwg, 11/24/2014 2:32:22 PM