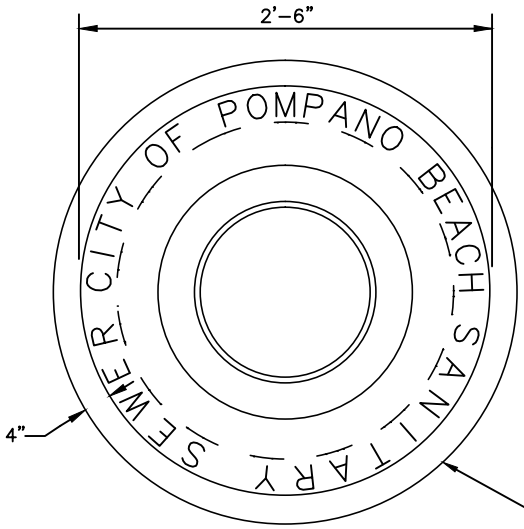

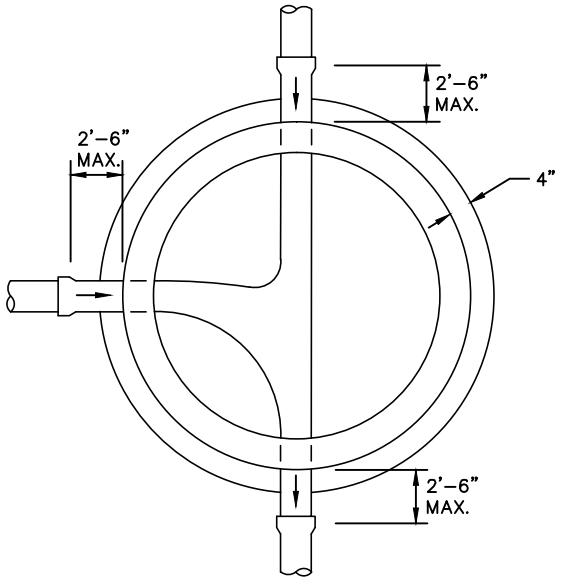

SECTION A-A

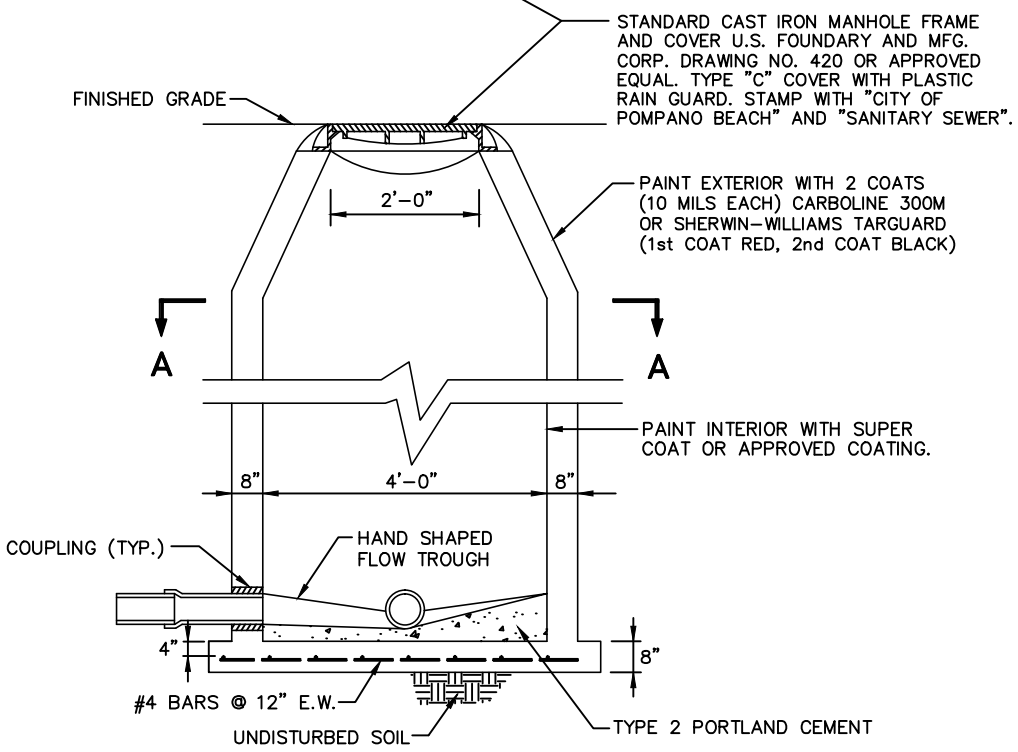

STANDARD MANHOLE

TO BE USED WHERE DEPTH EXCEEDS 4 FEET

ENGINEERING STANDARDS 2015

REVISIONS	
BY	DATE
S.S.	JUNE 2005
T.W.	11-2007
S.S.	12-2013

ENGINEERING DIVISION
CITY OF POMPANO BEACH

SCALE: N.T.S.

STANDARD MANHOLE

DATE: JUNE 1996
DWG. NO. 215-1

J:\City-STANDARDS\Sanitary 2-3.dwg, 11/24/2014 2:33:43 PM