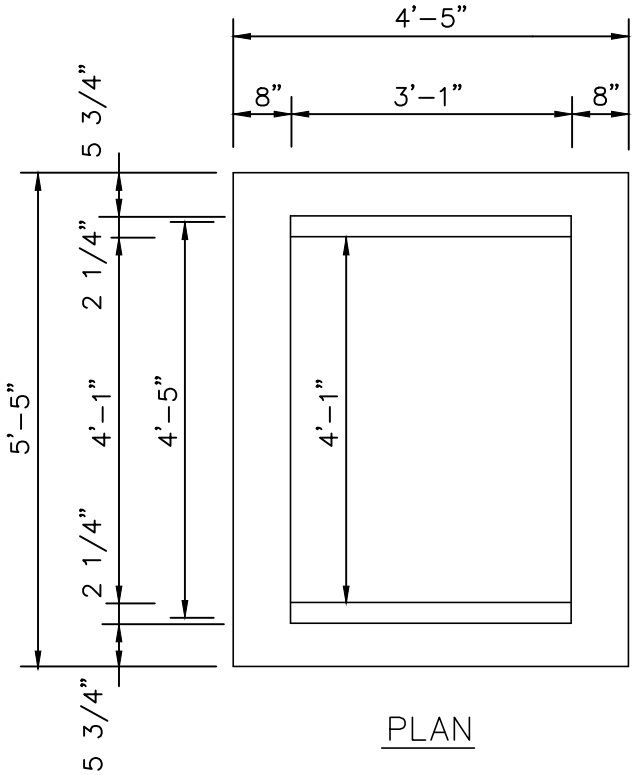

PLAN

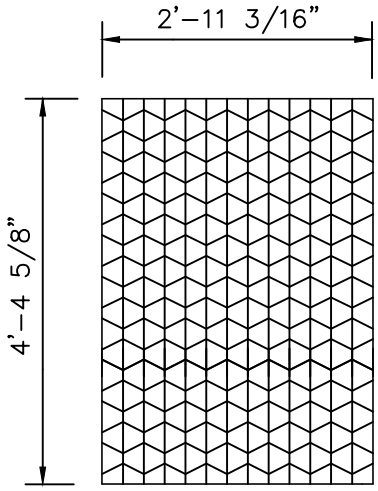

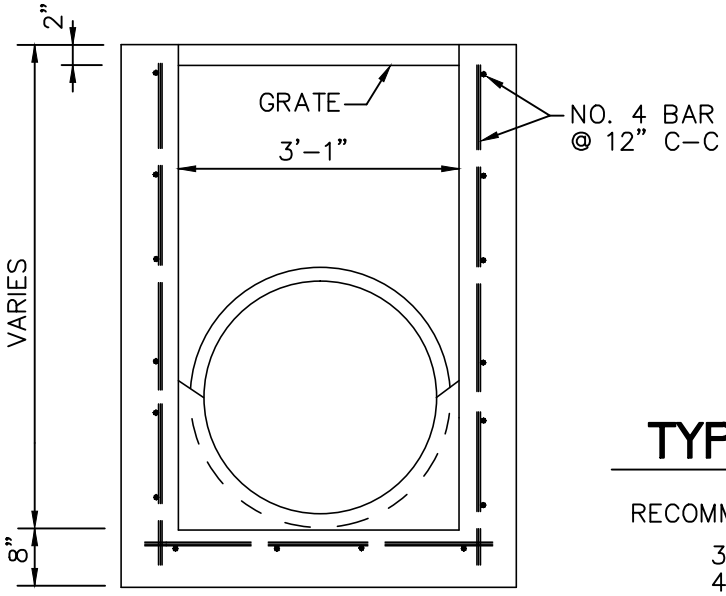

SECTION

TYPE "D" INLET

RECOMMENDED MAXIMUM PIPE SIZE

3'-1" WALL-24" PIPE
4'-1" WALL-36" PIPE

ENGINEERING STANDARDS 2015

REVISIONS	
BY	DATE
S.S.	09-11

ENGINEERING DIVISION
CITY OF POMPANO BEACH

SCALE: N.T.S.

TYPE "D" INLET

DATE: JUNE 1996
DWG. NO.
401-1

J:\City-STANDARDS\Drainage 4-1.dwg, 11/24/2014 3:21:05 PM