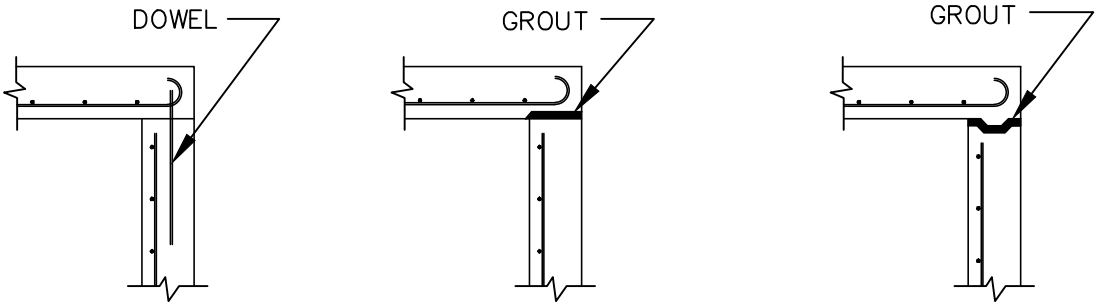

TOP SLABS TO WALL

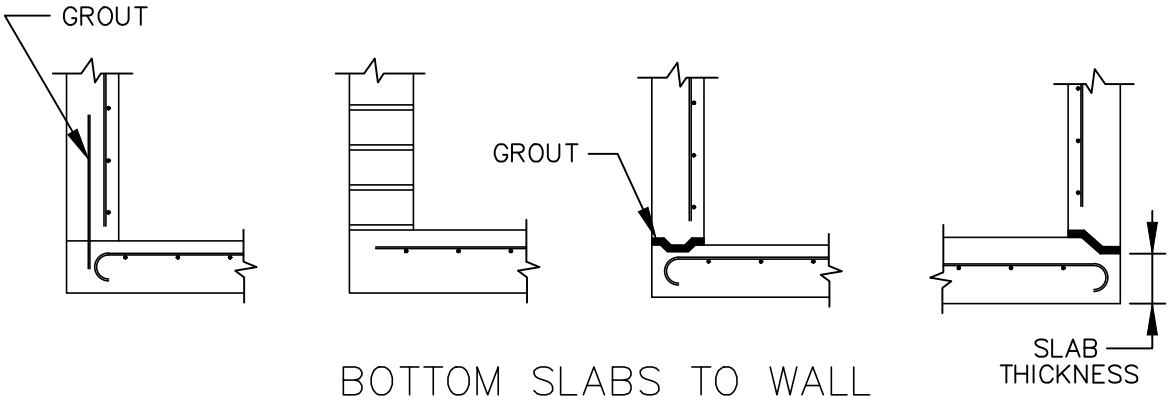

BOTTOM SLABS TO WALL

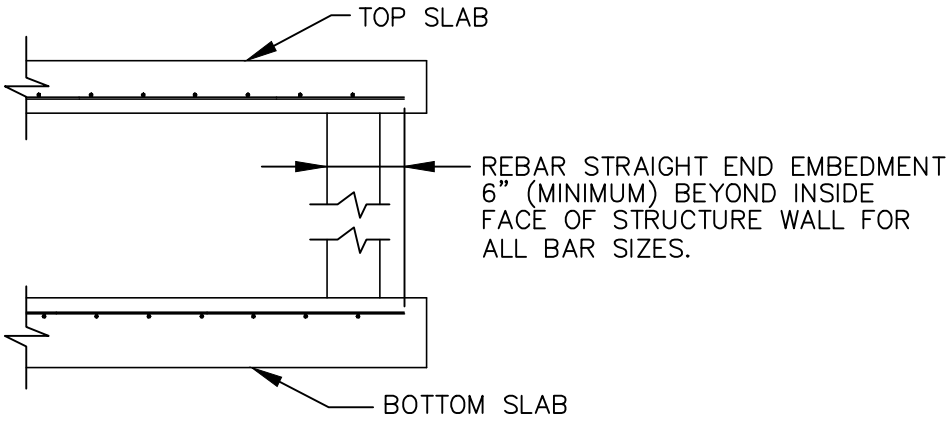

REBAR STRAIGHT END EMBEDMENT IN LIEU OF
ACI STANDARD HOOKS FOR TOP AND BOTTOM SLABS

OPTIONAL CONSTRUCTION JOINTS

ENGINEERING STANDARDS 2015

REVISIONS		ENGINEERING DIVISION CITY OF POMPANO BEACH	OPTIONAL CONSTRUCTIONAL JOINTS
BY	DATE		DATE: JUNE 1996 DWG. NO. 412-1
		SCALE: N.T.S.	

J:\City-STANDARDS\Drainage 4-3.dwg, 11/24/2014 3:29:42 PM